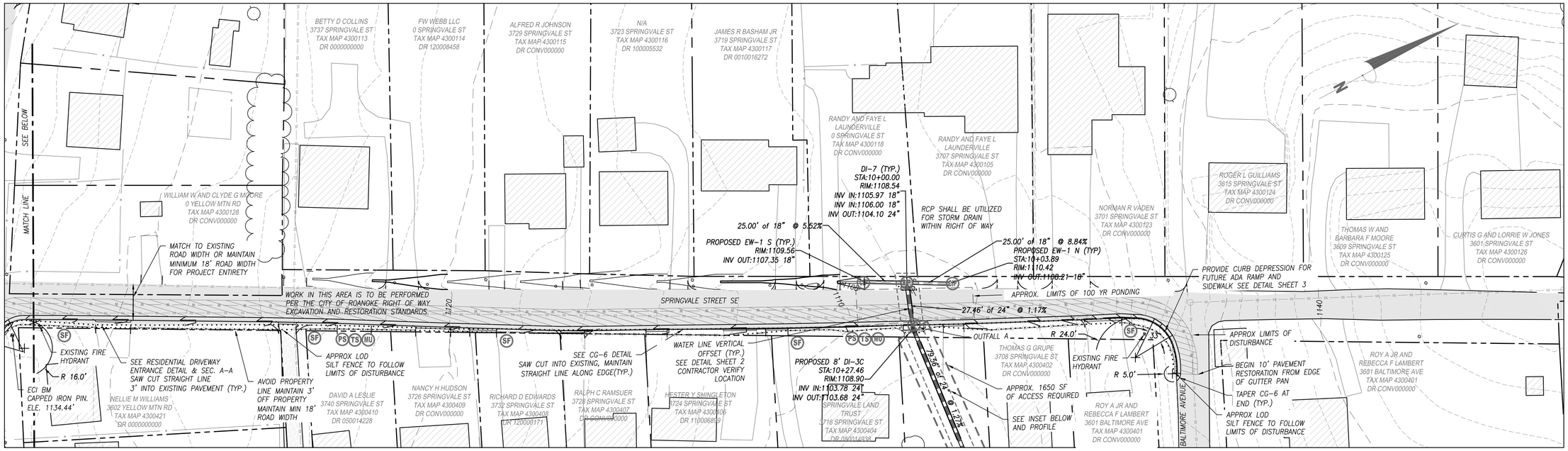

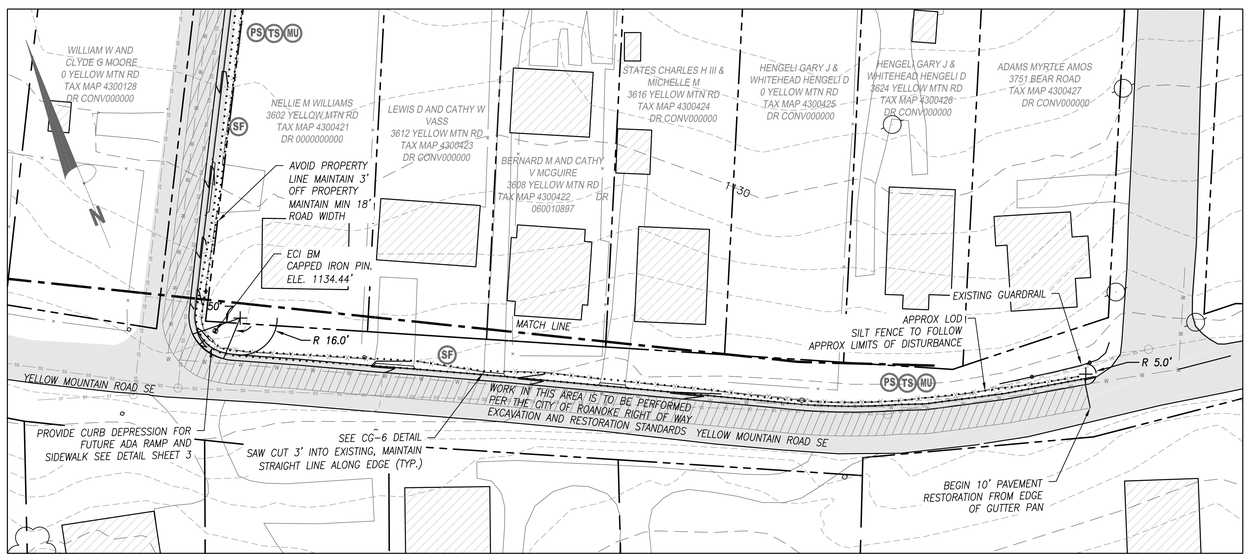

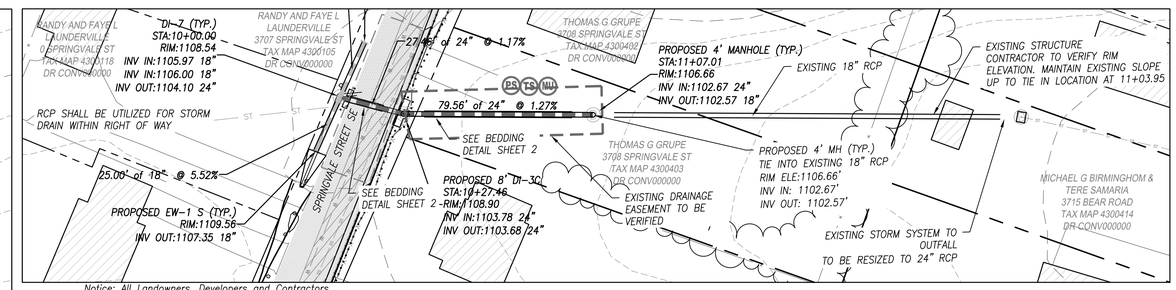

Notice: All Landowners, Developers and Contractors
FAILURE TO COMPLY WITH THE CONSTRUCTION PROCEDURE REQUIREMENTS LISTED BELOW MAY RESULT IN THE COSTLY REMOVAL OF STRUCTURES, TIME DELAYS OR THE ISSUANCE OF A STOP WORK ORDER.
Construction Procedure Requirements

1. Right-of-Way Excavation Permit – Prior to the commencement of any digging, alteration or construction within the public right-of-way (streets, alleys, public easements), a right-of-way excavation permit shall be applied for and obtained by the contractor from the City of Roanoke.

2. Land Disturbance Permit –An approved erosion and sediment control plan for any borrow/fill sites associated with the project must be submitted prior to the issuance of a land disturbance permit.

3. Plans and Permits – A copy of the plans as approved by the City (signed by the proper City officials) and all permits issued by the City shall be available at the construction site at all times of ongoing construction.

4. Location of Utilities – The contractor shall verify the location of all existing utilities prior to the commencement of any construction.

5. Construction Entrance – The contractor shall install an adequate construction entrance for all construction related egress from the site. Size and composition of construction entrance shall be as shown on the plans.

6. Streets to Remain Clean – It shall be the responsibility of the contractor to insure that the public street adjacent to the construction entrance remains free of mud, dirt, dust, and/or any type of construction materials or litter at all times.

7. Barricades/Ditches – The contractor shall maintain the integrity of all excavated ditches and shall furnish and ensure that all barricades proper and necessary for the safety of the public are in place.

8. Sewer and Pavement Replacement – Construction of sanitary sewers and the replacement of pavement shall be in accordance with approved standards and specifications of the City of Roanoke and the Western Virginia Water Authority

9. Approved Plans/Construction Changes – Any change or variation from construction design as shown on the officially approved plans shall be approved by the erosion and sediment control agent prior to said changes or variation in construction being made.

10. Final Acceptance/City – The owner or developer shall furnish the City of Roanoke's Planning Building and Development Department with a field surveyed final correct set of as-built plans of the newly constructed storm drain and/or stormwater management facilities prior to final acceptance and issuance of a certificate of occupancy by the City. As-built plans shall be provided in the State Plane Virginia South Coordinate System, NAD 1983, FIPS 4502 Feet, US Survey Feet, Datum NA 83, in the form of 1 paper copy and 1 digital AUTOCAD file.

PLAN VIEW
1"=30'

30 0 30 60 90
Scale 1" = 30'

PS TS MU
ALL EXCAVATED AREAS SHALL BE SEEDED AND RESTORED TO GRASS

IP SF CIP
CULVERT INLET PROTECTION, INLET PROTECTION AND SILT FENCE TO BE UTILIZED AS SHOWN

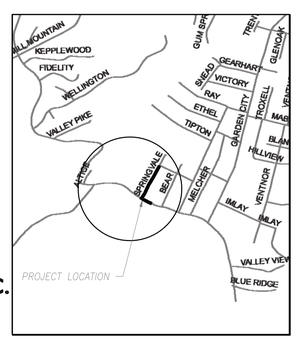

NOTES:

PAVEMENT REPAIR SHALL REQUIIRE MILLING AND REPAVING FOR ENTIRE LENGTH OF PROJECT FOR A WIDTH OF 10' FROM INITIAL REPAIR. NO CBR TESTING WILL BE REQUIRED

TOPOGRAPHY SHOWN IS FROM CITY GIS DATA, WATER AND SEWER LINES ARE SHOWN AS APPROXIMATE LOCATIONS, CONTRACTOR TO VERIFY ACTUAL LOCATIONS.

CONTRACTOR SHALL ENSURE POSITIVE DRAINAGE UPON COMPLETION IN ALL LOCATIONS WITHIN THE PROJECT AREA

CONTRACTOR SHALL BACKFILL TO TOP BACK OF CURB IN ALL LOCATIONS NOT RECEIVING PAVEMENT OR SIDEWALK

CONTRACTOR SHALL MAINTAIN TWO-WAY TRAFFIC AT ALL TIMES, STREET CLOSURES ARE NOT ALLOWED UNLESS APPROVED BY THE CITY OF ROANOKE

CONTRACTOR SHALL TOPSOIL AND SEED ALL AREAS HAVING BACK OF CURB DISTURBED DURING CONSTRUCTION. CONTRACTOR SHALL REMOVE ANY EXCESS PAVEMENT BEHIND CURB AND TOPSOIL AND SEED AS INDICATED.

CONTRACTOR TO VERIFY WATER METER LOCATIONS BEFORE CONSTRUCTION
WATER METERS AND OR VALVES TO BE RELOCATED BY CONTRACTOR WITH WVWA INSPECTION

TRENCH EXCAVATION/RESTORATION TO BE CONDUCTED AS INDICATED ON BEDDING/BACKFILL AND UTILITY TRENCH REPAIR DETAIL ON SHEET 2. RCP SHALL BE UTILIZED FOR ALL STORM DRAIN WITHIN RIGHT OF WAY

ALL WORK WITHIN THE RIGHT OF WAY SHALL BE PERFORMED TO THE CITY OF ROANOKE RIGHT OF WAY EXCAVATION AND RESTORATION STANDARDS

CONTRACTOR SHALL RE-ESTABLISH ALL EXISTING DRIVEWAYS INDICATED OR REQUIRED WITHIN SCOPE OF PROJECT, EXTEND ENTRANCE TO EXISTING RIGHT OF WAY AS REQUIRED BY CITY OF ROANOKE

NO ADDITIONAL DRIVEWAYS ARE PROPOSED. DRIVEWAYS WIDTH NOT TO STANDARDS WILL NOT BE INCREASED

COMMONWEALTH OF VIRGINIA
ROBERT H. WAMPLER, JR.
Lic. No. 34713
8/21/14
PROFESSIONAL ENGINEER

SPRINGVALE DISTURBANCE AREAS BEYOND EXISTING PAVEMENT PER OUTFALL					
LOCATION	CG, AND PAVEMENT (SF)			TOTAL (SF)	
OUTFALL A	2606			2606	
SPRINGVALE DISTURBANCE AREAS					
ITEM	LINEAR FEET	WIDTH	SQUARE FEET	RW-IMPERVIOUS	RW-PERVIOUS
LIMITS OF DISTURBANCE EXCLUDING PAVEMENT	N/A	N/A	2606	334	2272
ASPHALT RESTORATION	1620.4	10	16204	16204	
CG-6	1095	2.5	2737.5	2737.5	
TRENCHING	105	3.5	367.5	87.5	280
TEMPORARY CONSTRUCTION	82.5	20	1650	N/A	N/A
TOTAL LIMITS OF DISTURBANCE				19029	2552

ENGINEERING CONCEPTS, INC.
20 S. ROANOKE ST., PO BOX 619
FINCASTLE, VIRGINIA 24090
540.473.1253 FAX: 540.473.1254

No.	Revision	By	Appd.	Date
1	PRE-SUBMITTAL COMMENTS	CJM	RHW	06/16/14
2	CITY REVIEW – 1	CJM	RHW	07/21/14
3	CITY REVIEW – 2	CJM	RHW	08/21/14

Drawn CJM
Designed CJM
Checked RHW
Approved RHW

PHASE 18
CURB, GUTTER, & SIDEWALK
SPRINGVALE STREET SE
ROANOKE CITY, VIRGINIA

SCALE: 1"=30'
AUG. 21, 2014
PROJECT: 13030

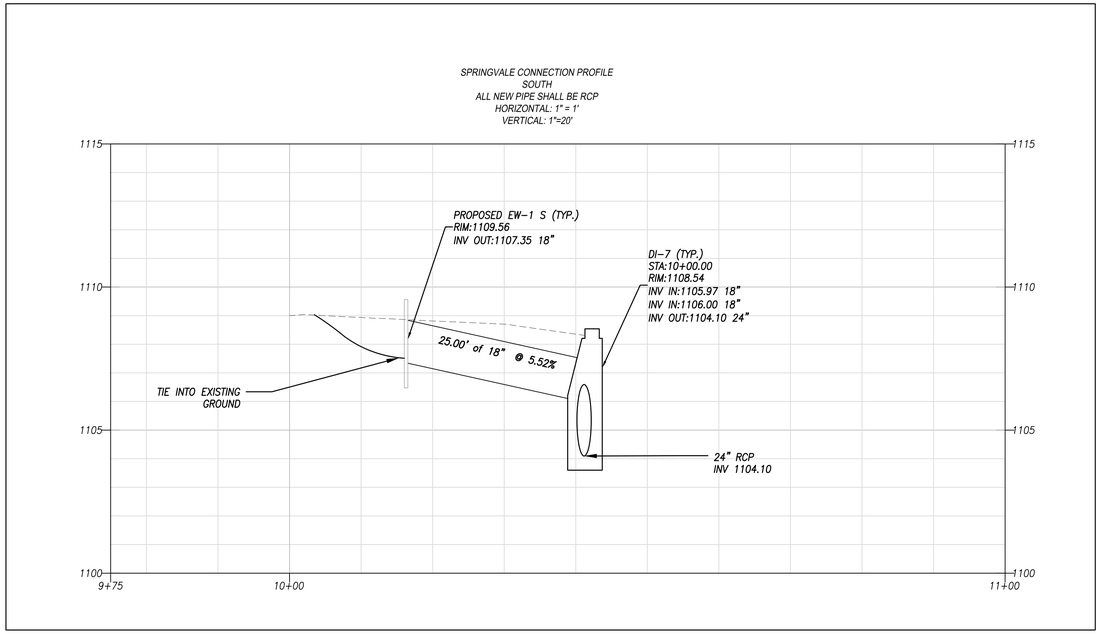

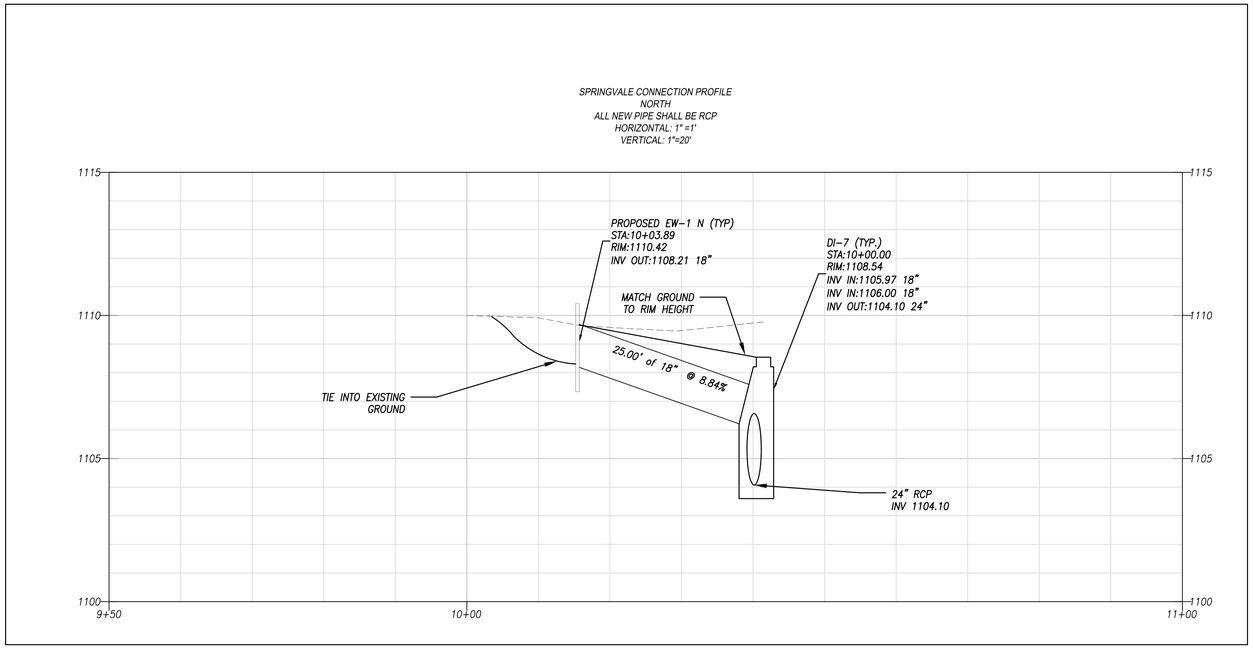

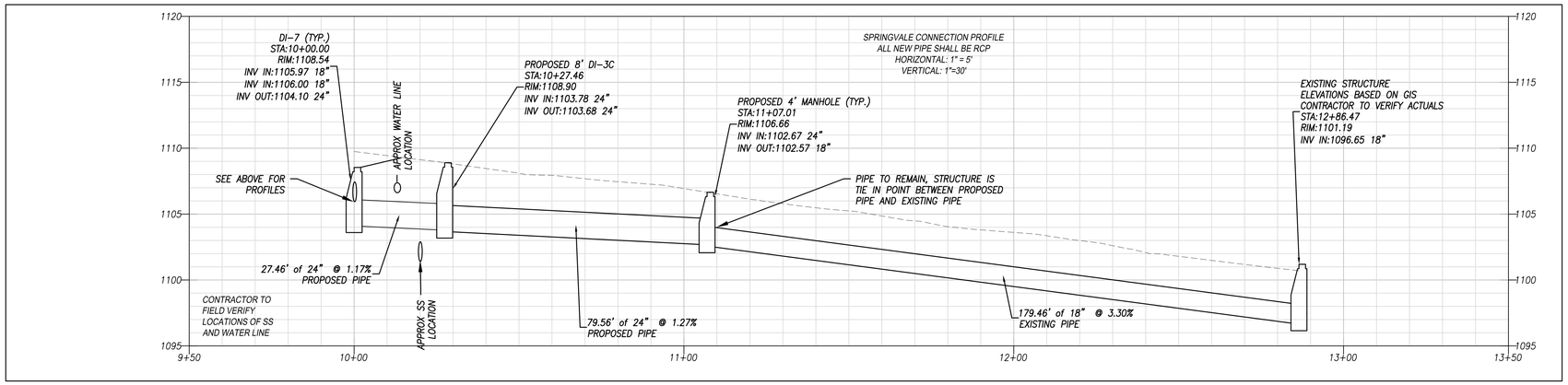

1. BEDDING, HAUNCHING AND INITIAL BACKFILL CONSTRUCTION SHALL BE IN ACCORDANCE WITH THIS DETAIL AND MANUFACTURER'S RECOMMENDATION.
2. ALL PVC PIPE SHALL BE BEDDED IN COMPACTED VDOT #57 OR #58 STONE, OR CRUSHER RUN.
3. IN AREAS SUBJECTED TO VEHICULAR TRAFFIC, BEDDING STONE AND FILL SHALL BE PLACED IN 6" LIFTS FROM BOTTOM OF TRENCH TO 1' ABOVE THE PIPE AND THE REMAINING SHALL BE PLACED IN 10" LIFTS AND SHALL BE COMPACTED TO AT LEAST 90% OF MAXIMUM DENSITY AS DETERMINED BY ASTM D 698.
4. BEDDING REQUIREMENTS FOR DUCTILE IRON WATER LINE ARE DEPENDENT ON MANUFACTURER'S BEDDING CRITERIA.
5. ALL EXCAVATIONS SHALL COMPLY WITH OSHA TECHNICAL MANUAL, CHAPTER 2, TITLED "EXCAVATIONS: HAZARD RECOGNITION IN TRENCHING AND SHORING."
6. THE TRACER WIRE SHALL BE PLACED ALONG THE LOWER QUADRANT OF THE PIPE. THE WIRE SHALL NOT TOUCH THE PIPE, BUT SHALL BE A MAXIMUM OF 6" FROM THE PIPE. NON-METALLIC SPACERS MAY BE USED TO MAINTAIN A SET DISTANCE FROM THE UTILITY.

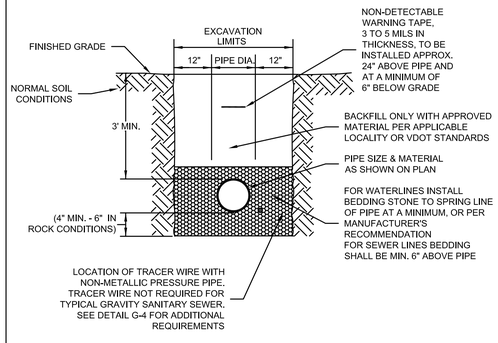

WESTERN VIRGINIA REGIONAL – CONSTRUCTION DETAIL

BEDDING AND BACKFILL OUTSIDE OF PAVED AREAS 01/01/12 | G-11

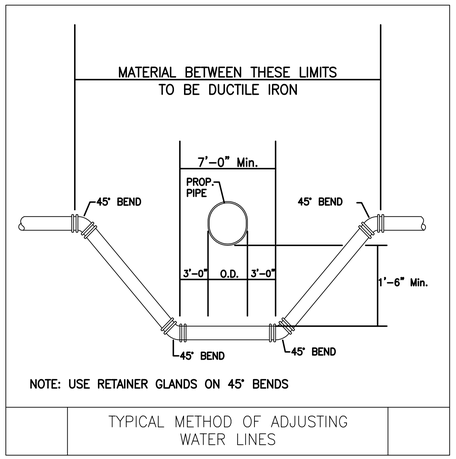

TYPICAL METHOD OF ADJUSTING WATER LINES

ENGINEERING CONCEPTS, INC.
20 S. ROANOKE ST., PO BOX 619
FINCASTLE, VIRGINIA 24090
540.473.1253 FAX: 540.473.1254

COMMONWEALTH OF VIRGINIA
ROBERT H. WAMPLER, JR.
Lic. No. 34713
8/21/14
PROFESSIONAL ENGINEER

No.	Revision	By	Appd.	Date
1	PRE-SUBMITTAL COMMENTS	CJM	RHW	06/16/14
2	CITY REVIEW – 1	CJM	RHW	07/21/14

Drawn CJM
Designed CJM
Checked RHW
Approved RHW

PHASE 18
CURB, GUTTER, & SIDEWALK

SPRINGVALE STREET SE
ROANOKE CITY, VIRGINIA

SCALE: AS SHOWN
AUG. 21, 2014
PROJECT: 13030

Notice: All Landowners, Developers and Contractors
FAILURE TO COMPLY WITH THE CONSTRUCTION PROCEDURE REQUIREMENTS LISTED BELOW MAY RESULT IN THE COSTLY REMOVAL OF STRUCTURES, TIME DELAYS OR THE ISSUANCE OF A STOP WORK ORDER.
Construction Procedure Requirements

1. Right-of-Way Excavation Permit – Prior to the commencement of any digging, alteration or construction within the public right-of-way (streets, alleys, public easements), a right-of-way excavation permit shall be applied for and obtained by the contractor from the City of Roanoke.

2. Land Disturbance Permit –An approved erosion and sediment control plan for any borrow/fill sites associated with the project must be submitted prior to the issuance of a land disturbance permit.

3. Plans and Permits – A copy of the plans as approved by the City (signed by the proper City officials) and all permits issued by the City shall be available at the construction site at all times of ongoing construction.

4. Location of Utilities – The contractor shall verify the location of all existing utilities prior to the commencement of any construction.

5. Construction Entrance – The contractor shall install an adequate construction entrance for all construction related egress from the site. Size and composition of construction entrance shall be as shown on the plans.

6. Streets to Remain Clean – It shall be the responsibility of the contractor to insure that the public street adjacent to the construction entrance remains free of mud, dirt, dust, and/or any type of construction materials or litter at all times.

7. Barricades/Ditches – The contractor shall maintain the integrity of all excavated ditches and shall furnish and ensure that all barricades proper and necessary for the safety of the public are in place.

8. Sewer and Pavement Replacement – Construction of sanitary sewers and the replacement of pavement shall be in accordance with approved standards and specifications of the City of Roanoke and the Western Virginia Water Authority

9. Approved Plans/Construction Changes – Any change or variation from construction design as shown on the officially approved plans shall be approved by the erosion and sediment control agent prior to said changes or variation in construction being made.

10. Final Acceptance/City – The owner or developer shall furnish the City of Roanoke's Planning Building and Development Department with a field surveyed final correct set of as-built plans of the newly constructed storm rain and/or stormwater management facilities prior to final acceptance and issuance of a certificate of occupancyby e City. As-built plans shall be provided in the State Plane Virginia South Coordinate System, NAD 1983, FIPS 4502 Feet, US Survey Feet, Datum NA 83, in the form of 1 paper copy and 1 digital AUTOCAD file.

GENERAL NOTES:

*1. * DENOTES WHEN ENTRANCE IS CROSSING A SIDEWALK, THE CONTRACTOR SHALL EXTEND BACK OF ENTRANCE TO FRONT EDGE OF THE SIDEWALK. OTHERWISE USE A MINIMUM IS 24".*

2. SIDEWALKS THROUGH ENTRANCES SHALL BE CONSTRUCTED IN ACCORDANCE WITH DETAIL A-A. MINIMUM 7" THICK.

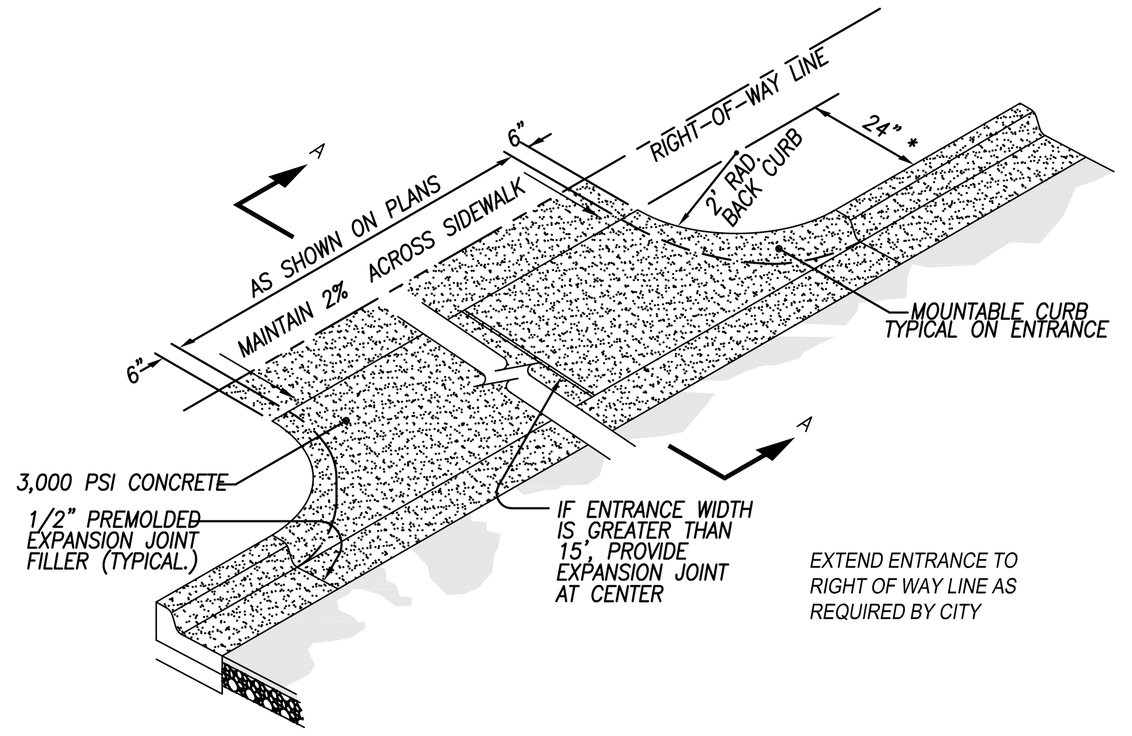

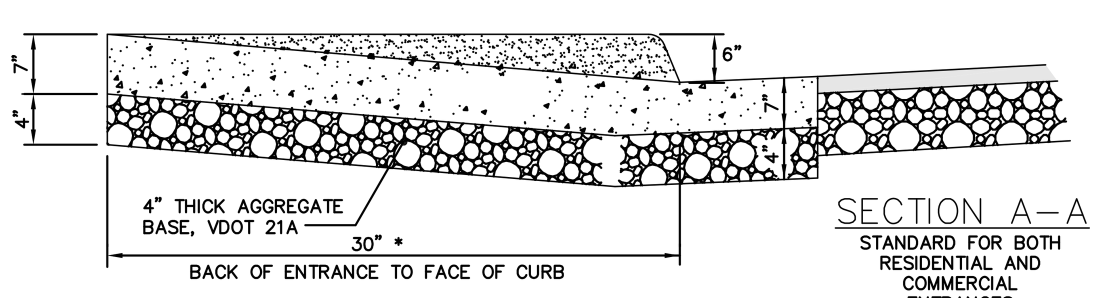

SECTION A–A
STANDARD FOR BOTH RESIDENTIAL AND COMMERCIAL ENTRANCES

RESIDENTIAL DRIVEWAY ENTRANCE

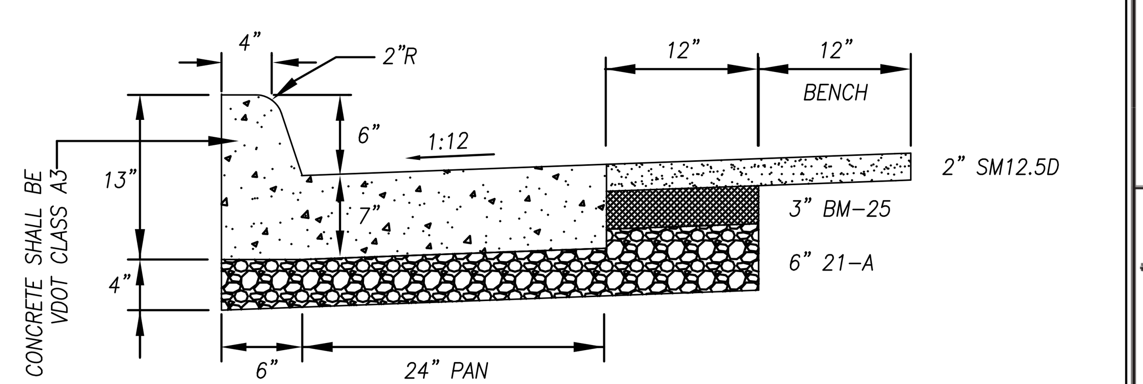

STANDARD 6" CURB AND GUTTER WITH ASPHALT RESTORATION (CG-6) NTS

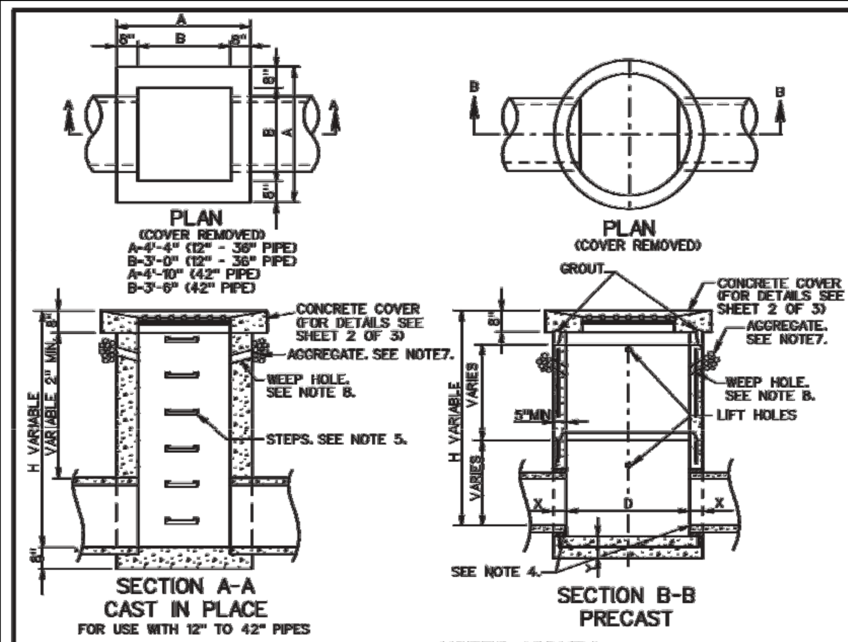

NOTES (DI-7, 7A, 7B)

1. DEPTH OF INLET (H) TO BE SHOWN ON PLANS.
2. THE "H" DIMENSION SHOWN ON THE STANDARDS AND SPECIFIED ON THE PLANS WILL BE MEASURED FROM THE INVERT OF THE OUTFALL PIPE TO THE TOP OF THE STRUCTURE. PLAN "H" DIMENSIONS ARE APPROXIMATE ONLY FOR ESTIMATING PURPOSES AND THE ACTUAL DIMENSIONS SHALL BE DETERMINED BY THE CONTRACTOR FROM FIELD CONDITIONS. MAXIMUM DEPTH (H) TO BE 12'-8.
3. WHEN SPECIFIED ON THE PLANS THE INVERT IS TO BE SHAPED IN ACCORDANCE WITH STANDARD IS-1. THE COST OF FURNISHING AND PLACING ALL MATERIALS INCIDENTAL TO THE SHAPING IS TO BE INCLUDED IN THE BID PRICEN FOR THE STRUCTURE.
4. IN THE EVENT THE INVERT OF THE OUTFALL PIPE IS HIGHER THAN THE BOTTOM OF THE STRUCTURE, THE INVERT OF THE STRUCTURE SHALL BE SHAPED WITH CEMENT MORTAR TO PREVENT STANDING OR PONDING OF WATER IN THE STRUCTURE. THE COST OF FURNISHING AND PLACING ALL MATERIALS INCIDENTAL TO THE SHAPING IS TO BE INCLUDED IN THE BID PRICE FOR THE STRUCTURE.
5. STEPS ARE TO BE PROVIDED WHEN H IS 4'-0" OR GREATER. FOR DETAILS SEE STANDARD ST-1.
6. REINFORCED CONCRETE FOOTING MAY BE PRECAST OR CAST-IN-PLACE. TWO LIFTING HOOKS OF FABRICATORS DESIGN TO BE PROVIDED IN PRECAST FOOTING
7. 4" DEPTH AGGREGATE #68, #78, OR #8 X 6" WIDTH.
8. 3" DIAMETER WEEP HOLE WITH 12"X12" PLASTIC HARDWARE CLOTH ¼" MESH OR GALVANIZED STEEL WIRE, MINIMUM WIRE DIAMETER 0.03", NUMBER 4 MESH HARDWARE CLOTH ANCHORED FIRMLY TO THE OUTSIDE OF THE STRUCTURE.
9. THE TYPE OF INLET (PRECAST OR CAST IN PLACE), DETAILED HEREON, TO BE CONSTRUCTED, WILL BE AT THE OPTION OF THE CONTRACTOR.
10. FOR DETAILS OF CONCRETE COVER, COLLAR AND GRATE AND THE METHOD OF PLACING APPROACH GUTTER SEE SHEET 2 OF 3.
11. CAST-IN PLACE CONCRETE IS TO BE CLASS A3 (3000 PSI). PRECAST CONCRETE IS TO BE 4000 PSI.
12. CONCRETE QUANTITIES SHOWN ARE FOR INDICATED DEPTH (H) WITHOUT PIPES. THE AMOUNT DISPLACED BY PIPES MUST BE DEDUCTED TO OBTAIN TRUE QUANTITIES. FOR INLETS OF DIFFERENT DEPTHS ADD OR SUBTRACT THE APPROPIATE CUBIC YARDS OF CONCRETE FOR EACH FOOT OF DEPTH.
13. PAVED DITCHES ARE TO BE TRANSITIONED TO MEET INLET GUTTER AS SHOWN IN STANDARD PG-2A.
14. PROVIDE SAFETY SLABS WHEN SPECIFIED ON THE PLANS.

NOTES (CONT.)

15. DI-7 ------ NO GUTTER
 DI-7A ------ SINGLE GUTTER WHEN DROP INLET IS ON A GRADE.
 DI-7B ------ DOUBLE GUTTER WHEN DROP INLET IS IN A SAG BETWEEN TWO GRADES.
16. FOR DETAILS OF PRECAST DI-7 NOT SHOWN HEREON SEE PRECAST UNIT ASSEMBLY DIAGRAM, PAGE 103.01, FOR PRECAST GENERAL NOTES, PAGE 103.02 AND FOR APPLICABLE PRECAST BASE, RISER AND TOP DETAILS, PAGES 103.07 THRU 103.12.
17. GRATE BARS TO BE PARALLEL TO DITCH FLOW.

RECOMMENDED MINIMUM HEIGHT CHART		
PIPE SIZE	H DIMENSION CONC.	H DIMENSION CORR. METAL
12"	2'-6"	2'-5"
15"	2'-9¼"	2'-8"
18"	3'-0½"	2'-11"
21"	3'-3¾"	3'-2"
24"	3'-7"	3'-5"
27"	3'-10¼"	3'-8"
30"	4'-1½"	3'-11"
33"	4'-4¾"	4'-2"
36"	4'-8"	4'-5"
42"	5'-2½"	4'-11"

PIPE SIZE	12"	15"	18"	24"	30"	36"	42"
MINIMUM DEPTH H	2'-0"	2'-3¼"	2'-6½"	3'-1"	3'-7½"	4'-2"	4'-8½"
CONCRETE CUBIC YARDS	.947	1.045	1.143	1.339	1.535	1.731	1.927

INCREMENT PER FOOT OF ADDITIONAL DEPTH (H) = 0.362 CU. YDS. (12" - 36" PIPE) = 0.410 CU. YDS. (42" PIPE)

SPECIFICATION REFERENCE 241 503 | **STANDARD MEDIAN DROP INLET** 12" TO 42" PIPE | VIRGINIA DEPARTMENT OF TRANSPORTATION | VDOT ROAD AND BRIDGE STANDARDS | REVISION DATE | SHEET 1 OF 3 | 104.22

DI-7, 7A, 7B — DETAILS OF CONCRETE COVER AND GRATE

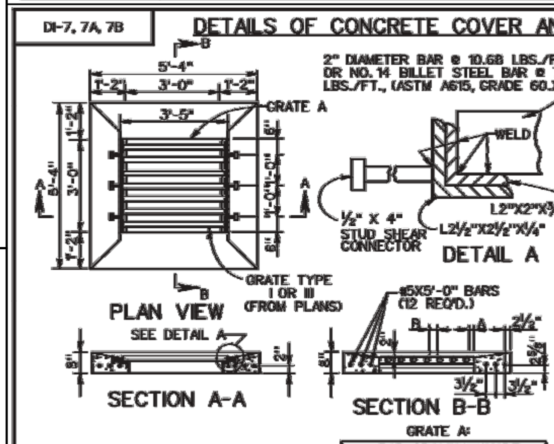

APPROXIMATE QUANTITIES	
CONCRETE CLASS A3	REINFORCING STEEL
0.423 C.Y.	63 LBS.

GRATE A:

BAR SPACING CHART		
GRATE TYPE	MAXIMUM DIMENSION A	MAXIMUM DIMENSION B
I	1½"	3"
III	1"	1"

NOTES

1. GRATE A IS TO BE UTILIZED IN LOCATIONS NOT NORMALLY SUBJECT TO TRAFFIC.
2. GRATE B IS TO BE UTILIZED IN LOCATIONS NORMALLY SUBJECT TO TRAFFIC.
3. FOR DETAILS OF LOAD CARRYING GRATE (GRATE B), SEE T-DI-7, SHEET 103.08.
4. CONCRETE COVER AND GRATE ARE TO BE FURNISHED AS A SINGLE UNIT. OUTSIDE DIMENSIONS OF GRATE TO BE 3'-4" X 2'-11⅞" (GRATE A) OR 3'-4" X 2'-11½" (GRATE B).
5. ALTERNATE METHODS OF ANCHORING ANGLE IRON WILL BE ACCEPTABLE IF APPROVED BY THE ENGINEER.
6. GRATE AND COLLAR ARE TO BE GALVANIZED.
7. CONCRETE COVER MAY BE PRECAST OR CAST IN PLACE.
8. CONCRETE TO BE CLASS A3 IF CAST IN PLACE. 4000 PSI IF PRECAST.
9. GRATE BARS TO BE PARALLEL TO DITCH FLOW.

DETAILS OF GUTTER AND METHOD OF PLACEMENT

NOTES

1. DI-7 NO GUTTERS.
 DI-7A NO GUTTER IN ONE DIRECTION.
 DI-7B GUTTER IN BOTH DIRECTIONS.
2. JOINTS BETWEEN GUTTERS AND CONCRETE COVER ARE TO BE DOWELED WITH #4 X 8" SMOOTH RODS @ APPROX. 12" C-C TO PREVENT SETTLEMENT. IN LIEU OF DOWELS A 2" X 4" NOTCH MAY BE PROVIDED.
 SEE STANDARD T-DI-3, 4 ALTERNATE DESIGN.
3. VARIABLE 2:1 OR FLATTER.
4. DITCH GRADE MUST BE ADJUSTED TO MEET DIFFERENCE IN ELEVATION. SEE LONGITUDINAL SECTION.
5. IF DEPTH (D) BECOMES LESS THEN 4", LENGTH OF WINGS ARE TO BE EXTENDED AS DIRECTED BY THE ENGINEER.
6. CURTAIN WALL TO BE LOCATED AT THE END OF THE PAVED DITCH SECTIONS OF THE DI-7A & DI-7B THAT ARE NOT ABUTTED BY OTHER DRAINAGE.
7. IF NORMAL DITCH GRADE IS TOO FLAT TO ALLOW FOR ADJUSTED GRADE TO INLET, A SPECIAL GUTTER DETAIL WILL BE REQUIRED ON PLANS.

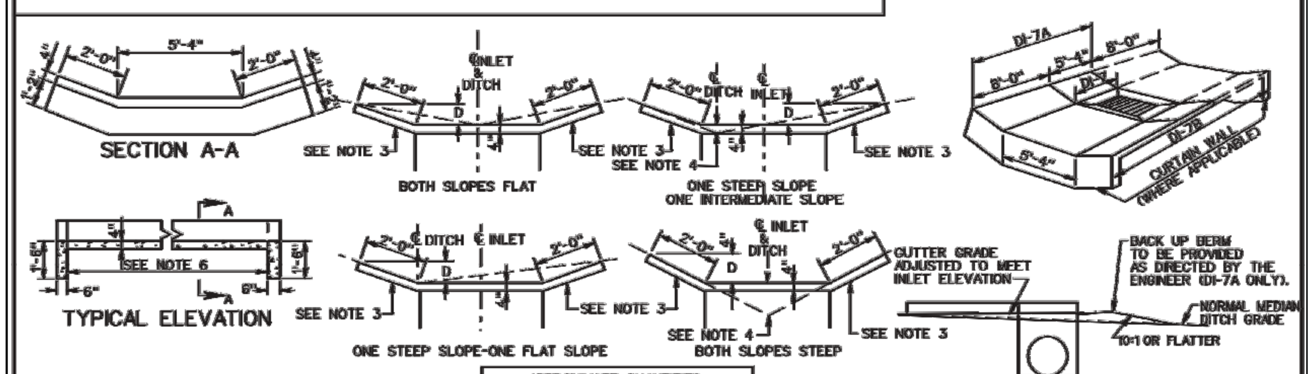

APPROXIMATE QUANTITY FOR ONE CURTAIN WALL, MEASURED FROM BOTTOM OF GUTTER	
CONCRETE CLASS A3	0.241 CU. YDS.

APPROXIMATE QUANTITIES	DI-7	DI-7A	DI-7B
CONCRETE CLASS A3 (CU. YDS.)	NONE	1.211	2.148

VDOT ROAD AND BRIDGE STANDARDS | SHEET 2 OF 3 | REVISION DATE | 104.23 | **STANDARD MEDIAN DROP INLET** 12" TO 42" PIPE | VIRGINIA DEPARTMENT OF TRANSPORTATION | SPECIFICATION REFERENCE 241 503

NOTE: EXPANSION MATERIAL SHALL BE PLACED AROUND ALL UTILITY POLES & NEW CONCRETE CONSTRUCTION.

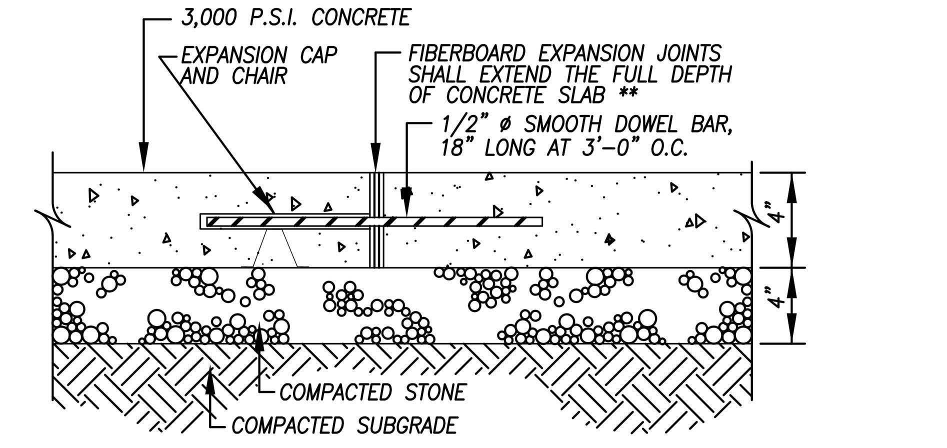

EXPANSION JOINT
NTS

** FIBERBOARD SHALL BE TRIMMED TO ALLOW FOR SEALANT. SEE PROJECT MANUAL SPECIFICATIONS FOR THE REQUIRED USE OF SEALANT.

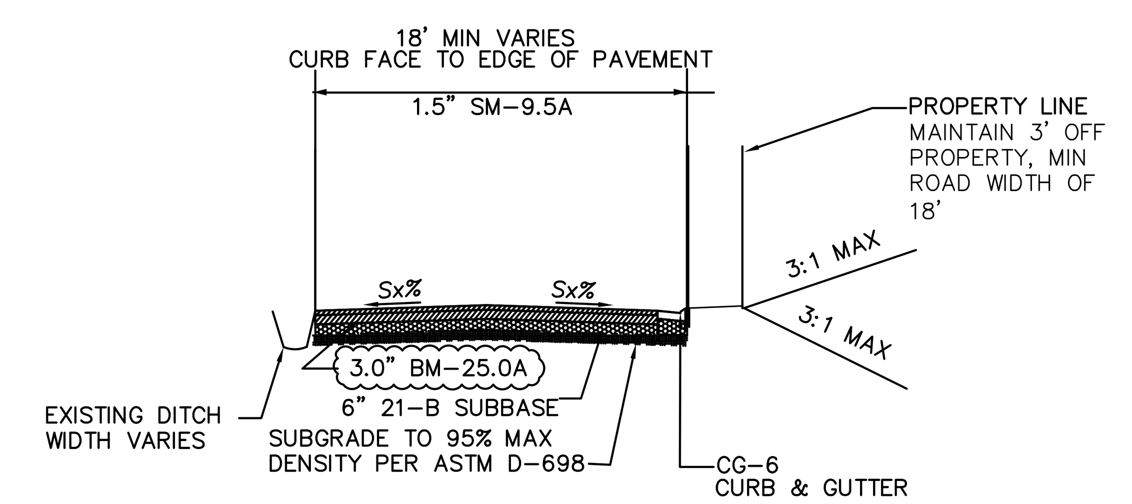

SPRINGVALE STREET/YELLOW MTN ROAD TYPICAL CROSS SECTION

NOT TO SCALE

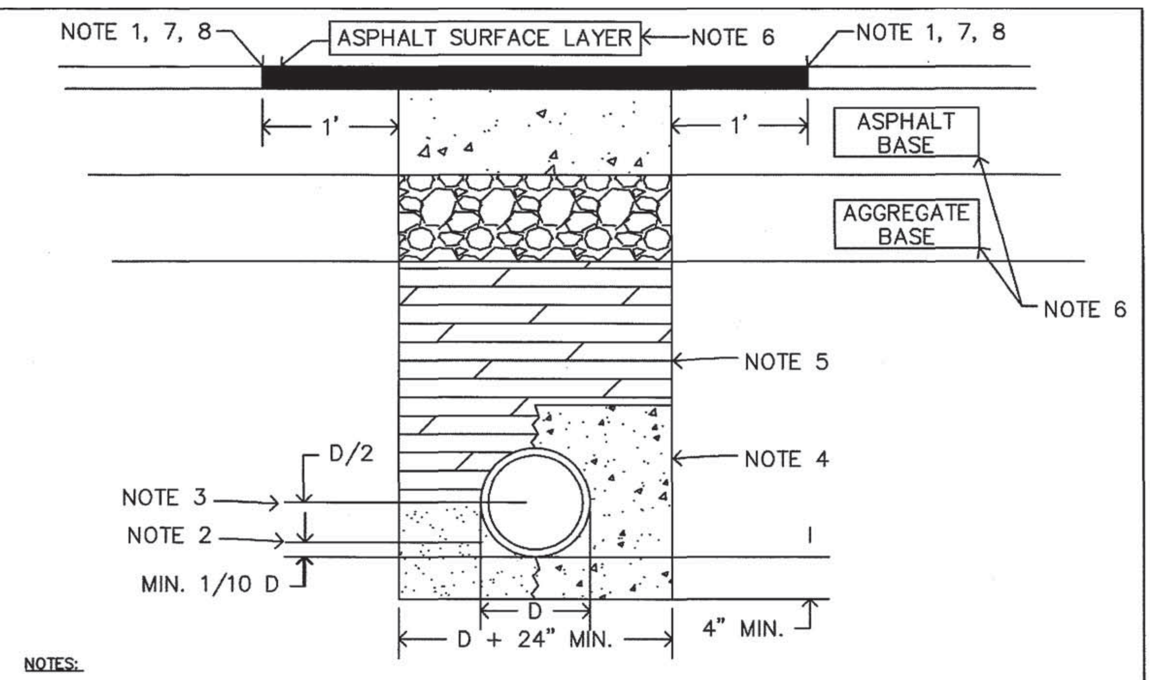

NOTES:

1. ALL PAVEMENTS SHALL BE SAW CUT WITH NEAT, UNIFORM LINES PRIOR TO EXCAVATION.
2. PIPE BEDDING MATERIAL SHALL BE CRUSHER RUN (VDOT NO. 25 OR 26) OR OPEN GRADED AGGREGATE (VDOT NO. 57, 68, 7, OR 8). ALTERNATE MATERIAL MUST BE APPROVED BY THE TRANSPORTATION DIVISION INSPECTOR.
3. MAXIMUM DEPTH OF PIPE BEDDING MATERIAL IF USING OPEN GRADED AGGREGATE FOR BEDDING.
4. OPTIONAL CONCRETE ENCASEMENT FOR POWER OR COMMUNICATION CONDUIT. PROVIDE A MINIMUM OF 4" CONCRETE COVER FROM ALL SIDES OF CONDUIT.
5. BACKFILL MATERIAL SHALL BE VDOT NO. 21A AGGREGATE OR FLOWABLE FILL.
 A. AGGREGATE SHALL BE PLACED IN LOOSE LIFTS NOT EXCEEDING 6", AND COMPACTED TO AT LEAST 95% MAXIMUM DRY DENSITY WITHIN 2 PERCENTAGE POINTS OF OPTIMUM MOISTURE (VTM-1) WITH THE USE OF MECHANICAL TAMPERS OR VIBRATORY ROLLERS. WATER COMPACTION IS NOT PERMITTED. LOCAL MATERIAL CLASSIFIED AS TYPE I SELECT MATERIAL MAY BE USED AS BACKFILL UPON PRIOR APPROVAL BY THE TRANSPORTATION DIVISION. SEE STANDARDS FOR ADDITIONAL INFORMATION ON DENSITY AND TESTING REQUIREMENTS.
 B. FLOWABLE FILL, IF USED, SHALL MEET THE REQUIREMENTS OF VDOT'S SPECIAL PROVISION FOR FLOWABLE BACKFILL. THE MATERIAL SHALL BE PLANT-CERTIFIED TO PROVIDE A 28-DAY COMPRESSIVE STRENGTH BETWEEN 30 AND 200 PSI. SEE STANDARDS FOR ADDITIONAL INFORMATION ON DENSITY AND TESTING REQUIREMENTS
6. RESTORATION OF ASPHALT PAVEMENT SHALL CONFORM TO SECTION 5.1 OF THE STANDARDS.
7. THE REPAIR SHALL BE RECTANGULAR AND SAW CUT IN STRAIGHT, UNIFORM LINES THAT ARE ALIGNED WITH THE STREET CENTERLINE. WHEN EDGES OF PAVEMENT HAVE BEEN UNDERMINED, PAVEMENT SHALL BE REMOVED TO A NEAT LINE 12" BEYOND THE UNDERMINED AREA. ANY INITIAL PAVEMENT REPAIR WITH AN AREA GREATER THAN 40 SQUARE FEET MAY BE NON-RECTANGULAR, HOWEVER, THE REPAIR SHALL BE SAW CUT IN STRAIGHT, UNIFORM LINES. ANY OTHER DEVIATION ON PATCH SHAPE MUST BE APPROVED BY THE INSPECTOR PRIOR TO THE REPAIR BEING MADE. THE FINISHED PATCH SURFACE SHALL BE WITHIN 1/4 INCH AT ANY POINT ACROSS THE PATCH AS IT RELATES TO THE SURROUNDING STREET SURFACE.
8. A FULL COVERAGE TACK COAT IS REQUIRED ON ALL SURFACES THAT WILL CONTACT THE NEW SURFACE LAYER.

DATE: July 1, 2013 | UTILITY TRENCH REPAIR | UTR-1

DI-3A, 3B, 3C — STANDARD CURB DROP INLET

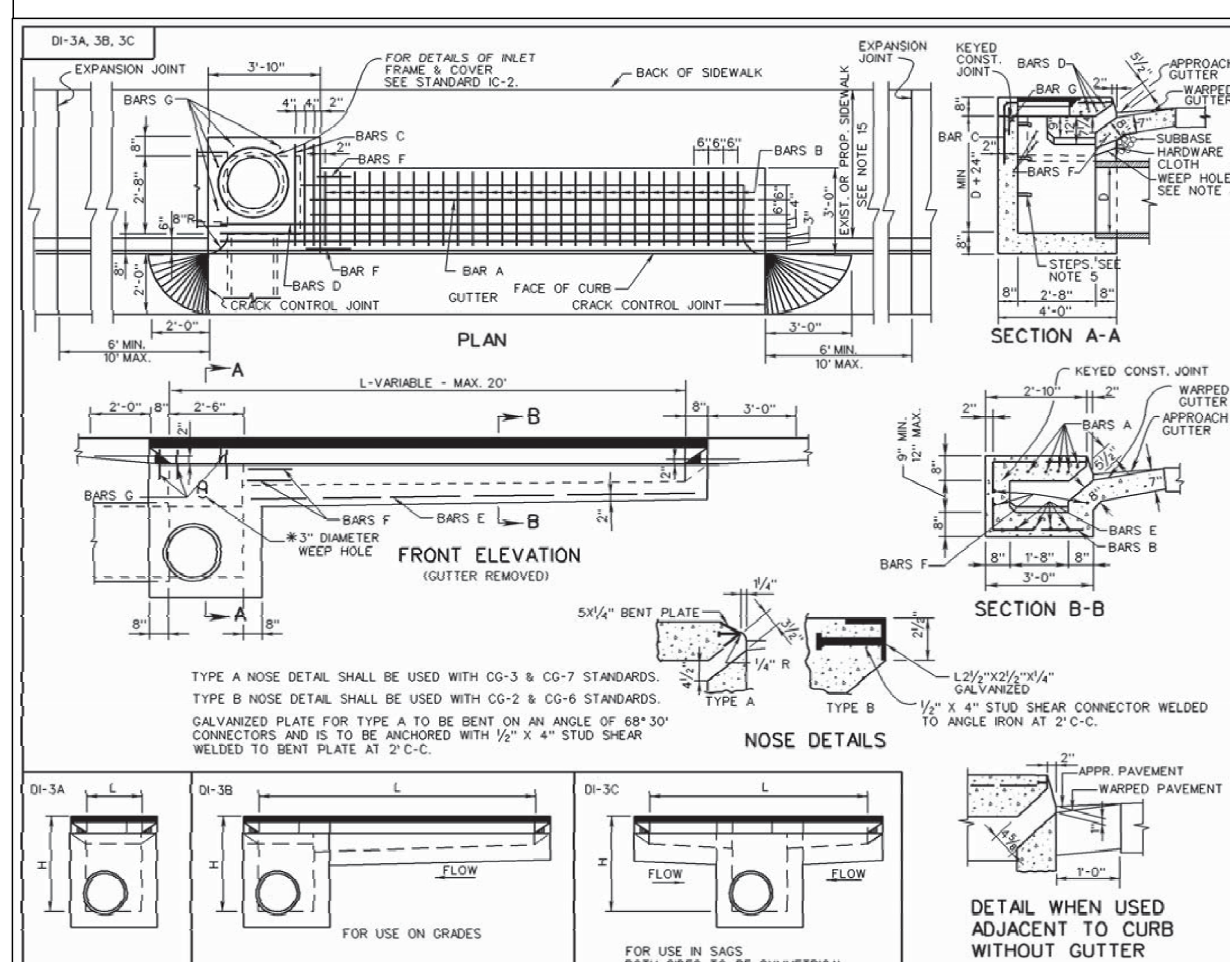

VDOT ROAD AND BRIDGE STANDARDS | SHEET 1 OF 1 | REVISION DATE | 104.09 | 08/10 | **STANDARD CURB DROP INLET** 12" - 30" PIPE; MAXIMUM DEPTH (H) = 8' | VIRGINIA DEPARTMENT OF TRANSPORTATION | SPECIFICATION REFERENCE 233 302

EW-1, 1A — STANDARD ENDWALL FOR PIPE CULVERTS

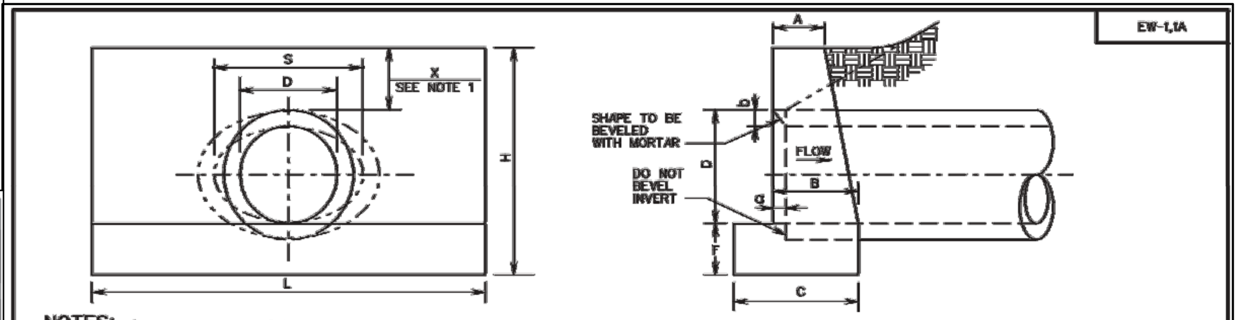

NOTES:

1. "H" MAY BE REDUCED UNTIL "X" REACHES A MINIMUM OF 4" WHERE ENDWALL WOULD PROTRUDE ABOVE SHOULDER LINE. IN NO CASE SHALL TOP OF ENDWALL PROJECT ABOVE FILL SLOPE, DITCH SLOPE, OR SHOULDER.
2. THIS ITEM MAY BE PRECAST OR CAST IN PLACE.
3. ALL CAST IN PLACE CONCRETE TO BE CLASS A3. FOR PRECAST SEE SHEET 101.02.
4. THIS STANDARD TO BE USED WITH STRAIGHT CROSSINGS AND ALL SKEWS(0° TO 45°).
5. HEADWALL TO BE BEVELED IN ALL AREAS EXCEPT WHERE A CONFLICT WITH INVERT OR WINGWALLS OCCUR
6. BEVEL EDGE IS REQUIRED ON THE HEADWALL AT THE INLET END OF THE CULVERT (WHERE THE FLOW ENTERS THE CULVERT).
7. HEADWALL AT THE OUTLET END OF THE CULVERT MAY BE EITHER SQUARE EDGE OR BEVEL EDGE.
8. ON SHALLOW FILLS, WHERE ENDWALLS ARE 1' OR LESS BELOW SHOULDER LINE, THE TOP OF THE ENDWALL SHALL BE CONSTRUCTED PARALLEL TO THE GRADE OF THE ROAD.
9. ¾" CHAMFER MAY BE PROVIDED ON ALL EDGES AT MANUFACTURER'S OPTION.

EW-1 — ENDWALL FOR CIRCULAR PIPE

DIAMETER OF PIPE CULVERT	12"	15"	18"	21" OR 24"	27" OR 30"	33" OR 36"
A	0'-6"	0'-8"	0'-9"	0'-11"	1'-0"	1'-0"
B	0'-11"	1'-1"	1'-3"	1'-6"	1'-9"	2'-0"
C	1'-4"	1'-7"	1'-9"	2'-2"	2'-6"	2'-9"
D	1'-0"	1'-3"	1'-6"	2'-0"	2'-6"	3'-0"
F	0'-6"	0'-8"	0'-8"	0'-9"	0'-9"	0'-9"
H	2'-3"	2'-11"	3'-2"	3'-9"	4'-3"	4'-9"
L	4'-0"	5'-0"	6'-0"	8'-0"	10'-0"	12'-0"
a	0'-1¼"	0'-1¾"	0'-2"	0'-2½"	0'-3¼"	0'-3¾"
b	0'-1"	0'-1¼"	0'-1½"	0'-2"	0'-2½"	0'-3"
CUBIC YARDS OF CONCRETE						
CONC. PIPE	0.241	0.492	0.697	1.319	2.067	2.947
C.M. PIPE	0.257	0.521	0.739	1.398	2.198	3.145

EW-1A — ENDWALL FOR ELLIPTICAL PIPE

SIZE OF ELLIPTICAL PIPE CULVERT (SPAN x RISE)	23"x14"	30"x19"	34"x22"	38"x24"	42"x27"	45"x29"	49"x32"	53"x34"
A	0'-8"	0'-9"	0'-10"	0'-11"	0'-11"	1'-0"	1'-0"	1'-0"
B	1'-2"	1'-5"	1'-6"	1'-8"	1'-9"	1'-10"	1'-11"	1'-11"
C	1'-8"	1'-11"	2'-1"	2'-4"	2'-5"	2'-7"	2'-8"	2'-9"
D	1'-2"	1'-7"	1'-10"	2'-0"	2'-3"	2'-5"	2'-8"	2'-10"
F	0'-8"	0'-8"	0'-9"	0'-9"	0'-9"	0'-9"	0'-9"	0'-9"
H	2'-10"	3'-3"	3'-7"	3'-9"	4'-0"	4'-2"	4'-5"	4'-7"
L	5'-5"	7'-2"	8'-6"	9'-2"	10'-2"	10'-11"	12'-1"	12'-11"
S	1'-11"	2'-6"	2'-10"	3'-2"	3'-6"	3'-9"	4'-1"	4'-5"
a	0'-2½"	0'-3¼"	0'-3½"	0'-4"	0'-4½"	0'-4¾"	0'-5"	0'-5½"
b	0'-2"	0'-2½"	0'-2¾"	0'-3"	0'-3½"	0'-3¾"	0'-4"	0'-4½"
CUBIC YARDS OF CONCRETE								
CONC. PIPE	0.502	0.855	1.236	1.500	1.811	2.101	2.512	2.801

SPECIFICATION REFERENCE 105 302 | **STANDARD ENDWALL FOR PIPE CULVERTS** 12" - 36" CIRCULAR AND 23" x 14" - 53" x 34" ELLIPTICAL PIPES | VIRGINIA DEPARTMENT OF TRANSPORTATION | VDOT ROAD AND BRIDGE STANDARDS | REVISION DATE | SHEET 1 OF 1 | 101.01

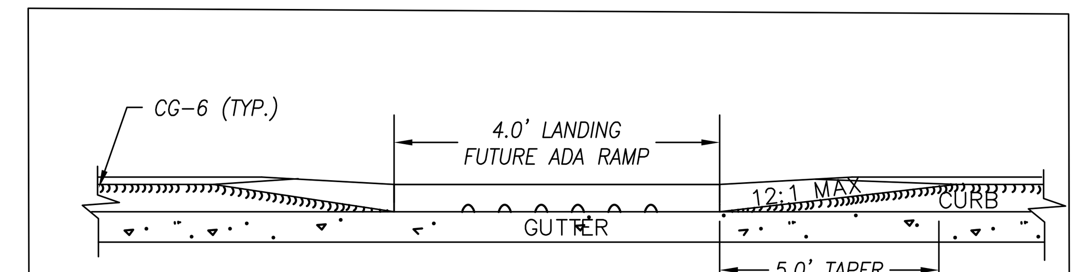

CURB DEPRESSION

COMMONWEALTH OF VIRGINIA
ROBERT H. WAMPLER, JR.
Lic. No. 34713
8/21/14
PROFESSIONAL ENGINEER

ENGINEERING CONCEPTS, INC.
20 S. ROANOKE ST., PO BOX 619
FINCASTLE, VIRGINIA 24090
540.473.1253 FAX: 540.473.1254

No.	Revision	By	Appd.	Date
1	PRE-SUBMITTAL COMMENTS	CJM	RHW	06/16/14
2	CITY REVIEW COMMENT – 1	CJM	RHW	07/21/14

Drawn	CJM
Designed	CJM
Checked	RHW
Approved	RHW

PHASE 18
CURB, GUTTER, & SIDEWALK

SPRINGVALE STREET SE
ROANOKE CITY, VIRGINIA

SCALE: AS SHOWN
AUG. 21, 2014
PROJECT: 13030

I. PROJECT DESCRIPTION

THE PURPOSE OF THIS PROJECT IS TO IMPROVE EXISTING STREETSCAPE AND PEDESTRIAN SAFETY ALONG SPRINGVALE AVENUE SE. THE TOTAL DISTURBED AREA IS 0.50 ACRES.

II. EXISTING SITE CONDITIONS

EXISTING STORMWATER RUNOFF DRAINS TO A DITCH LOCATED ALONG THE WESTERN SIDE OF SPRINGVALE AVENUE AND CONTINUES INTO AN ENCLOSED 18" RCP STORM SYSTEM THAT FLOWS EASTERLY TOWARDS NEW SPRING BRANCH. TWO INLETS ARE LOCATED IN FRONT OF 3707 AND 3716 SPRINGVALE AVENUE. ONE IS A MODIFIED DROP INLET AND THE OTHER IS A GRATE INLET.

III. ADJACENT PROPERTIES

THE PROJECT AREA IS LOCATED IN PUBLIC RIGHT OF WAY AND A BORDERED BY MULTIPLE PRIVATE PROPERTY OWNERS

IV. OFF SITE AREAS

UNSUITABLE MATERIAL WILL BE HAULED FROM THE SITE AND DISPOSED OF AT A LAND DISTURBANCE PERMITTED SITE.

V. SOILS

ACCORDING TO THE USDA NRCS WEB SOIL SURVEY, THE PROJECT SITE LIES ON:

15E - EDGEMONT CHANNERY SANDY LOAM, 35 TO 60 PERCENT SLOPES HYDROLOGIC SOIL GROUP:A AND IS WELL DRAINED. H-1 SURFACE LAYER(0-6 INCHES) CHANNERY SANDY LOAM. H-2 SUBSOIL(6-38 INCHES) CLAY LOAM. H-3 SUBSOIL(38-62 INCHES) LOAM.

29C - HAYESVILLE-URBAN LAND COMPLEX,2 TO 15 PERCENT SLOPE HYDROLOGIC SOIL GROUP:B, AND WELL DRAINED. H-1 SURFACE LAYER (0-8 INCHES) FINE SANDY LOAM. H-2 SUBSOIL(8-51 INCHES) CLAY. H-3 SUBSOIL (51-62 INCHES) SANDY CLAY LOAM

VI. CRITICAL AREAS

CRITICAL AREAS ARE FILL AREAS TO BE FILLED AT 2:1 SLOPES, THIS INCLUDES ALL AREAS RECIEVING FILL
PROPER SEEDING AND MATTING REINFORCEMENT SHALL BE UTILIZED

VII. EROSION AND SEDIMENT CONTROL MEASURES

ALL VEGETATIVE EROSION AND SEDIMENT CONTROL PRACTICES SHALL BE CONSTRUCTED AND MAINTAINED BY THE CONTRACTOR IN ACCORDANCE WITH THE LATEST EDITION OF THE VIRGINIA EROSION AND SEDIMENT CONTROL HANDBOOK.

A. STRUCTURAL PRACTICES
1. INLET PROTECTION (IP).

B. VEGETATIVE PRACTICES
1. PERMANENT SEEDING (PS) (MS-1 SPECIFICATION) WILL BE PROVIDED ON ALL DISTURBED AREAS ALREADY CONTAINING GRASS.
2. MULCHING (MU), VESCH SPEC 3.35 WILL BE USED IN CONJUNCTION WITH PERMANENT SEEDING.
3. TEMPORARY SEEDING (TS), (MS-1 SPECIFICATION) WILL BE PROVIDED ON ALL DISTURBED AREAS ALREADY CONTAINING GRASS.

C. MANAGEMENT STRATEGIES
1. CONSTRUCTION WILL BE PLANNED SO THAT TRENCHING AND EXCAVATING OPERATIONS CAN BEGIN AND END AS SOON AS POSSIBLE.
2. SOIL STOCKPILES SHALL NOT BE ALLOWED.
3. PREVIOUSLY GRASSED AREAS SHALL BE SEEDED AND STRAW MULCHED IMMEDIATELY AFTER STORM STRUCTURE INSTALLATION.
4. PERMANENT VEGETATION SHALL NOT BE CONSIDERED ESTABLISHED UNTIL A GROUND COVER IS ACHIEVED THAT IS UNIFORM AND MATURE ENOUGH TO SURVIVE AND WILL INHIBIT EROSION.

D. MAINTENANCE & INSPECTION
1. DAMAGE TO EROSION CONTROL MEASURES CAUSED BY CONSTRUCTION TRAFFIC OR OTHER ACTIVITY SHALL BE REPAIRED BEFORE THE END OF EACH WORKING DAY. ALL ITEMS TO BE INSPECTED AFTER SIGNIFICANT RAINFALL.
2. MAINTAIN ALL SEEDED AREAS UNTIL A UNIFORM STAND IS ACCEPTED. AREAS WHICH FAIL TO ESTABLISH VEGETATIVE COVER ADEQUATE TO PREVENT RILL EROSION WILL BE RESEEDED AND MULCHED AS SOON AS SUCH AREAS ARE IDENTIFIED.
3. SILT FENCE BARRIERS WILL BE CHECKED DAILY FOR UNDERMINING OR DETERIORATION OF THE FABRICE. SEDIMENT SHALL BE REMOVED WHEN THE LEVEL REACHES HALF WAY TO THE TOP OF THE BARRIER.
4. ALL INLET PROTECTION DEVICES SHALL BE INSPSECTED PRIOR TO AND AFTER AN ANTICIPATED LARGE STORM EVENT. DEVICE SHALL BE REPAIRED AS NEEDED UNTIL PROJECT COMPLETION

VIII. MINIMUM STANDARDS (MS):
ALL APPLICABLE VIRGINIA EROSION AND SEDIMENT CONTROL REGULATIONS AND MINIMUM STANDARDS SHALL BE ADHERED TO DURING ALL PHASES OF CONSTRUCTION. THESE INCLUDE, BUT ARE NOT LIMITED TO THE FOLLOWING:

MS-1: STABLIZATION OF DENUDED AREAS:
PERMANENT OR TEMPORARY SOIL STABILIZATION SHALL BE APPLIED TO BARE AREAS WITHIN 7 DAYS AFTER FINAL GRADE IS REACHED ON ANY PORTION OF THE SITE UNLESS OTHERWISE SHOWN. TEMPORARY SOIL STABILIZATION SHALL BE APPLIED WITHIN 7 DAYS TO DENUDED AREAS THAT MAY NOT BE AT FINAL GRADE, BUT REMAIN DORMANT OR UNDISTURBED FOR LONGER THAN 14 DAYS.
PERMANENT STABILIZATION SHALL BE APPLIED TO AREAS THAT ARE TO BE LEFT DORMANT FOR MORE THAN ONE YEAR.

RESPONSE; DISTURBED AREAS WILL BE SEEDED AND MULCHED IF THEY ARE NOT IN GRAVEL/PAVED AREAS.

MS-2: STABILIZATION OF SOIL STOCKPILES:
DURING CONSTRUCTION OF THE PROJECT, SOIL STOCKPILES SHALL BE STABILIZED OR PROTECTED WITH SEDIMENT TRAPPING MEASURES. THE APPLICANT IS RESPONSIBLE FOR TEMPORARY PROTECTION AND PERMANENT STABILIZATION OF ALL STOCKPILES ON THE SITE AS WELL AS SOIL INTENTIONALLY TRANSPORTED FROM THE PROJECT SITE.

RESPONSE: SOIL STOCK PILES SHALL NOT BE ALLOWED.

MS-3: PERMANENT VEGETATIVE COVER:
A PERMANENT VEGETATIVE COVER SHALL BE ESTABLISHED ON DENUDED AREAS NOT OTHERWISE PERMANENTLY STABILIZED. PERMANENT VEGETATION SHALL NOT BE CONSIDERED ESTABLISHED UNTIL A GROUND COVER IS ACHIEVED THAT, IN THE OPTION OF THE LOCAL AUTHORITY (CITY OF ROANOKE), IS UNIFORM AND MATURE ENOUGH TO SURVIVE.

RESPONSE: DISTURBED AREAS WILL BE SEEDED IF THEY ARE NOT IN GRAVEL/PAVED AREAS.

MS-4: TIMING AND STABILIZATION OF SILT TRAPPING MEASURES:
SEDIMENT TRAPS, STORM DRAIN INLET PROTECTION, SILT FENCING AND OTHER MEASURES INTENDED TO TRAP SEDIMENT SHALL BE CONSTRUCTED AS A FIRST STEP IN ANY LAND DISTURBING ACTIVITY. THE STRUCTURES SHALL BE MADE FUNCTIONAL BEFORE UPSLOPE LAND DISTURBANCE TAKES PLACE.

RESPONSE: SILT FENCE TO BE INSTALLED PRIOR TO EXCAVATION OR CONSTRUCTION WORK.INLET PROTECTION SHALL BE PLACED AT REQUIRED INLETS AS INDICATED ON PLANS WITHIN PROJECT SCOPE PRIOR TO EXCAVATION.

MS-5: STABILIZATION OF EARTHEN STRUCTURES:
STABILIZATION MEASURES SHALL BE APPLIED TO EARTHEN STRUCTURES SUCH AS DAMS, DIKES AND DIVERSIONS IMMEDIATELY AFTER INSTALLATION.

RESPONSE: NOT APPLICABLE

MS-6: SEDIMENT BASINS:
A SEDIMENT BASIN SHALL CONTROL SURFACE RUNOFF FROM DISTURBED AREAS THAT ARE COMPRISED OF FLOW FROM DRAINAGE AREAS GREATER THAN OR EQUAL TO 3 ACRES. THE SEDIMENT BASIN SHALL BE DESIGNED AND CONSTRUCTED TO ACCOMMODATE THE ANTICIPATED SEDIMENT LOADING FOR THE LAND DISTURBING ACTIVITY. THE OUTFALL DEVICE OR SYSTEM DEVICE SHALL TAKE INTO ACCOUNT THE TOTAL DRAINAGE AREA FLOWING THROUGH THE DISTURBED AREA TO BE SERVED BY THE BASIN.

RESPONSE: NOT APPLICABLE.

MS-7: CUT AND FILL SLOPES:
CUT AND FILL SLOPES SHALL BE CONSTRUCTED IN A MANNER THAT WILL MINIMIZE EROSION. SLOPES THAT ARE FOUND TO ERODING EXCESSIVELY WITHIN ONE YEAR OF PERMANENT STABILIZATION SHALL BE PROVIDED WITH ADDITIONAL SLOPE STABILIZING MEASURES UNTIL PROBLEM IS CORRECTED.

RESPONSE: NOT APPLICABLE. NO NEW CUT AND FILL SLOPES ARE IN PROJECT

MS-8: CONCENTRATED RUNOFF DOWN CUT OR FILL SLOPES:
CONCENTRATED RUNOFF SHALL NOT FLOW DOWN CUT OR FILL SLOPES UNLESS CONTAINED WITHIN AN ADEQUATE TEMPORARY OR PERMANENT CHANNEL, FLUME OR SLOPE DRAIN STRUCTURE.

RESPONSE: NOT APPLICABLE. NO NEW CUT AND FILL SLOPES ARE IN PROJECT.

MS-9: WATER SEEPS FROM A SLOPE FACE:
WHENEVER WATER SEEPS FROM A SLOPE FACE, ADEQUATE DRAINAGE OR OTHER PROTECTION SHALL BE PROVIDED.

RESPONSE: NOT APPLICABLE.

MS-10: STORM SEWER INLET PROTECTION:
ALL STORM SEWER INLETS SHALL BE PROTECTED SO THAT SEDIMENT -LADEN WATER CANNOT ENTER THE CONVEYANCE SYSTEM WITHOUT FIRST BEING FILTERED OR OTHERWISE TREATED TO REMOVE SEDIMENT.

RESPONSE: STONE AND SCREEN INLET PROTECTION IS PROVIDED AT ALL INLETS WITH NEW SEEDED AREAS ADJACENT TO THE INLET AND ALL INLETS RECEIVING RUNOFF FROM A DISTURBED AREA.

MS-11: STABILIZATION OF OUTLETS:
BEFORE NEWLY CONSTRUCTED STORMWATER CONVEYANCE CHANNELS ARE MADE OPERATIONAL, ADEQUATE OUTLET PROTECTION AND ANY REQUIRED TEMPORARY OR PERMANENT CHANNEL LINING SHALL BE INSTALLED IN BOTH THE CONVEYANCE CHANNEL AND RECEIVING CHANNEL

RESPONSE: THE NEW STORM SYSTEM IS TIED INTO A CONCRETE BASE, AND EXISTING STORM SYSTEMS

MS-12: WORK IN LIVE WATERCOURSES:
PRECAUTIONS SHALL BE TAKEN TO MINIMIZE ENCROACHMENT AND SEDIMENT TRANSPORT WHEN WORKING IN LIVE WATERCOURSES. THE WORK AREA SHALL BE STABILIZED TO THE GREATEST EXTENT POSSIBLE DURING CONSTRUCTION OF CAUSEWAYS AND COFFERDAMS. EARTHEN FILL MAY BE USED FOR THESE STRUCTURES IF ARMORED BY NONERODIBLE COVER MATERIALS.

RESPONSE: THERE ARE NO LIVE WATERCOURSES IN PROJECT AREA.

MS-13: CROSSING A LIVE WATERCOURSE:
WHEN A LIVE WATERCOURSE MUST BE CROSSED BY CONSTRUCTION VEHICLES MORE THAN TWICE IN ONE MONTH PERIOD, A TEMPORARY STREAM CROSSING CONSTRUCTED OF NONERODIBLE MATERIALS SHALL BE PROVIDED.

RESPONSE: NOT APPLICABLE

MS-14: APPLICABLE REGULATIONS:
ALL APPLICABLE FEDERAL. STATE, AND LOCAL REGULATIONS PERTAINING TO WORKING IN OR CROSSING A LIVE WATERCOURSE SHALL BE MET.

RESPONSE: NOT APPLICABLE

MS-15: STABILIZATION OF BED AND BANKS:
THE BED AND BANKS OF A WATERCOURSE SHALL BE STABILIZED IMMEDIATELY AFTER WORK IN THE WATERCOURSE IS COMPLETED.

RESPONSE: NOT APPLICABLE.

MS-16: UNDERGROUND UTILITIES:
UNDERGOUND UTILITIES SHALL BE INSTALLED IN ACCORDANCE WITH THE FOLLOWING STANDARDS IN ADDITION TO OTHER APPLICABLE CRITERIA:
A: NO MORE THAN 500 LINEAR FEET OF TRENCH MAY BE OPEN AT ONE TIME.
B: EXCAVATED MATERIAL SHALL BE PLACED ON THE UPHILL SIDE OF TRENCHES.
C: EFFLUENT FOR DEWATERING OPERATIONS SHALL BE FILTERD OR PASSED THROUGH AN APPROVED SEDIMENT TRAPPING DEVICE, OR BOTH, AND DISCHARGED IN A MANNER THAT DOES NOT ADVERSELY AFFECT FLOWING STREAMS OR OFFSITE PROPERTY.
D: RESTABILIZATION SHALL BE ACCOMPLISHED IN ACCORDANCE WITH THESE REGULATIONS.
E: APPLICABLE SAFETY REGULATIONS SHALL BE COMPILED WITH AT ALL TIMES

RESPONSE: THIS PROJECT WILL ADHERE TO THE ABOVE STANDARDS

MS-17: CONSTRUCTION ACCESS ROUTES:
WHERE CONSTRUCTION VEHICLE ACCESS ROUTES INTERSECT PAVED ROADS,PROVISIONS SHALL BE MADE TO MINIMIZE THE TRANSPORT OF SEDIMENT BY VEHICULAR TRACKING ON TO PAVED SURFACES.

RESPONSE: NOT APPLICABLE

MS-18: TEMPORARY E&S CONTROL MEASURE REMOVAL:
ALL TEMPORARY EROSION AND SEDIMENT CONTROL MEASURES SHALL BE REMOVED WITHIN 30 DAYS AFTER FINAL SITE STABILIZATION OR AFTER TEMPORARY MEASURES ARE NO LONGER NEEDED, UNLESS OTHERWISE AUTHORIZED BY THE LOCAL AUTHORITY (CITY OF ROANOKE).

RESPONSE: E&S MEASURES SHALL BE REMOVED UPON APPROVAL OF THE CITY OF ROANOKE.

MS-19: ADEQUACY OF RECEIVING CHANNELS:
PROPERTIES AND WATERWAYS DOWNSTREAM FROM THE DEVELOPMENT SITE SHALL BE PROTECTED FROM SEDIMENT DEPOSITION, EROSION, AND DAMAGE DUE TO INCREASES IN VOLUME, VELOCITY, AND PEAK FLOW RATES OF STORM WATER RUNOFF FOR STATED FREQUENCY STORM OF 24-HOUR DURATION IN ACCORDANCE WITH THE FOLLOWING STANDARDS AND CRITERIA:

A. CONCENTRATED STORMWATER RUNOFF LEAVING A DEVELOPMENT SITE SHALL BE DISCHARGED DIRECTLY INTO AN ADEQUATE NATURAL OR MAN-MADE RECEIVING CHANNEL, PIPE OR STORM SEWER SYSTEM. FOR THOSE SITES WHERE RUNOFF IS DISCHARGED INTO A PIPE OR PIPE SYSTEM, DOWNSTREAM STABILITY ANALYSES AT THE OUTFALL OF THE PIPE OR PIPE SYSTEM SHALL BE PERFORMED.
B. ADEQUACY OF ALL CHANNELS AND PIPES SHALL BE VERIFIED IN THE FOLLOWING MANNER:
1. THE APPLICANT SHALL DEMONSTRATE THAT THE TOTAL DRAINAGE AREA TO THE POINT OF ANALYSIS WITHIN THE CHANNEL IS ONE HUNDRED TIMES GREATER THAN THE CONTRIBUTING DRAINAGE AREA OF THE PROJECT IN QUESTION; OR
2 a. NATURAL CHANNELS SHALL BE ANALYZED BY THE USE OF A TWO-YEAR STORM TO VERIFY THAT STORMWATER WILL NOT OVERTOP CHANNEL BANKS NOR CAUSE EROSION OF CHANNEL BED OR BANKS; AND
b. ALL PREVIOUSLY CONSTRUCTED MAN-MADE CHANNELS SHALL BE ANALYZED BY THE USE OF A TEN-YEAR STORM STORM TO VERIFY THAT STORMWATER WILL NOT OVERTOP ITS BANKS AND BY THE USE OF A TWO-YEAIR STORM TO DEMONSTRATE THAT STORMWATER WILL NOT CAUSE EROSION OF CHANNEL BED OR BANKS; AND
c. PIPES AND STORM SEWER SYSTEMS SHALL BE ANALYZED BY THE USE OF A TEN-YEAR STORM TO VERIFY THAT STORMWATER WILL BE CONTAINED WITHIN THE PIPE OR SYSTEM.
C. IF EXISTING NATURAL RECEIVING CHANNELS OR PREVIOUSLY CONSTRUCTED MAN-MADE CHANNELS OR PIPES ARE NOT ADEQUATE, THE APPLICANT SHALL:
1. IMPROVE THE CHANNEL TO A CONDITION WHERE A TEN-YEAR STORM WILL NOT OVERTOP THE BANKS AND A TWO-YEAR WILL NOT CAUSE EROSION TO THE CHANNEL BED OR BANKS; OR
2. IMPROVE THE PIPE OR PIPE SYSTEM TO A CONDITION WHERE THE TEN-YEAR STORM IS CONTAINED WITHIN THE APPURTENANCES; OR
3. DEVELOP A SITE DESIGN THAT WILL NOT CAUSE THE PRE-DEVELOPMENT PEAK RUNOFF RATE FROM A TWO-YEAR STORM TO INCREASE WHEN RUNOFF OUTFALLS INTO A NATURAL CHANNEL OR WILL NOT CAUSE THE PRE-DEVELOPMENT PEAK RUNOFF RATE FROM A TEN-YEAR STORM TO INCREASE WHEN RUNOFF OUTFALLS INTO A MAN-MADE CHANNEL; OR
4. PROVIDE A COMBINATION OF CHANNEL IMPROVEMENT, STORMWATER DETENTION OR OTHER MEASURES WHICH IS SATISFACTORY TO THE PLAN-APPROVING AUTHORITY TO PREVENT DOWNSTREAM EROSION.
D. THE APPLICANT SHALL PROVIDE EVIDENCE OF PERMISSION TO MAKE THE IMPROVEMENTS.
E. ALL HYDROLOGIC ANALYSES SHALL BE BASED ON THE EXISTING WATERSHED CHARACTERISTICS AND THE ULTIMATE DEVELOPMENT OF THE SUBJECT PROJECT.
F. IF THE APPLICANT CHOOSES AN OPTION THAT INCLUDES STORMWATER DETENTION HE SHALL OBTAIN APPROVAL FROM THE LOCALITY OF A PLAN FOR MAINTENANCE OF THE DETENTION FACILITIES. THE PLAN SHALL SET FORTH THE MAINTENANCE REQUIREMENTS OF THE FACILITY AND THE PERSON RESPONSIBLE FOR PERFORMING THE MAINTENANCE.
G. OUTFALL FROM A DETENTION FACILITY SHALL BE DISCHARGED TO A RECEIVING CHANNEL, AND ENERGY DISSIPATORS SHALL BE PLACED AT THE OUTFALL OF ALL DETENTION FACILITIES AS NECESSARY TO PROVIDE A STABILIZED TRANSITION FROM THE FACILITY TO THE RECEIVING CHANNEL
H. ALL ON-SITE CHANNELS MUST BE VERIFIED TO BE ADEQUATE.
I. INCREASED VOLUMES OF SHEET FLOWS THAT MAY CAUSED EROSION OR SEDIMENTATION ON ADJACENT PROPERTY SHALL BE DIVERTED TO A STABLE OUTLET, ADEQUATE CHANNEL, PIPE OR PIPE SYSTEM, OR TO A DETENTION FACILITY.
J. IN APPLYING THESE STORMWATER RUNOFF CRITERIA. INDIVIDUAL LOTS OR PARCELS IN A RESIDENTIAL, COMMERCIAL OR INDUSTRIAL DEVELOPMENT SHALL NOT BE CONSIDERED TO BE SEPARATE DEVELOPMENT PROJECTS. INSTEAD, THE DEVELOPMENT, AS A WHOLE,SHALL BE CONSIDERED TO BE A SINGLE DEVELOPMENT CONDITION SHALL BE USED IN ALL ENGINEERING CALCULATIONS.
K. ALL MEASURES USED TO PROTECT PROPERTIES AND WATERWAYS SHALL BE EMPLOYED IN A MANNER WHICH MINIMIZES IMPACTS ON THE PHYSICAL, CHEMICAL AND BIOLOGICAL INTEGRITY OF RIVERS,STREAMS AND OTHER WATERS OF THE STATE.

RESPONSE: THIS PROJECT INVOLVES THE CONSTRUCTION OF UNDERGROUND STORM PIPES WHICH WILL NOT INCREASE THE RUNOFF OF THE PROJECT AREA. THE PRE AND POST CONDITION RUNOFF IS SUCH THAT MINIMAL TO NO INCREASE WILL OCCUR. THE LAND DISTURBING ACTIVITIES ARE LINEAR IN NATURE. THE CONSTRUCTION OF THIS LINEAR DEVELOPMENT PROJECT WILL BE EXEMPTED FROM STORMWATER MANAGEMENT REQUIREMENTS FOR THE FOLLOWING REASONS; LESS THAN ONE ACRE WILL BE DISTURBED AND ONLY 2552 SF OF PERVIOUS AREA WILL BE IMPACTED. THERE ARE NO ANTICIPATED FLOODING OR EROSION IMPACTS DOWNSTREAM (PIPE, STRUCTURES, OUTSIDE OF PAVEMENT. (LOCAL REGULATION)

IX. STORMWATER MANAGEMENT:
THERE ARE NO PROPOSED STORM WATER MANAGEMENT FACILITIES.

X. SOIL STOCKPILES AND BORROW AREAS:
NO STOCK PILES ARE ALLOWED IN PROJECT AND NO BORROW AREAS ARE REQUIRED.

XI. SEQUENCE OF CONSTRUCTION:
PROCESS AS DEEMED APPROPRIATE BY CONTRACTOR
ALL WORK SHALL ADHERE TO ROANOKE CITY STANDARDS AND THOSE SPECIFIED WITHIN PLAN SHEETS.

XII. PROPERTY OWNER
CITY OF ROANOKE, VA
215 CHURCH AVENUE, SW
ROANOKE, VA 24011

TEMPORARY SEEDING MIXTURE (TS)

DESCRIPTION	% BY WEIGHT
TEMPORARY SEEDING	
ANNUAL RYE GRASS	100
RATE: 2 POUNDS PER 1000 SQUARE FEET	
ROWING DATES; FEBRUARY 16 TO APRIL 30	
ANNUAL RYE GRASS/ WINTER RYE MIX	
ANNUAL RYE	50
WINTER RYE	50
RATE: 2 POUNDS PER 1000 SQUARE FEET	
SOWING DATES; SEPTEMBER 1 TO FEBRUARY 15	
GERMAN MILLET	
RATE: 1 POUND PER 1000 SQUARE FEET	
SOWING DATES; MAY 1 TO AUGUST 31	

PERMANENT SEEDING MIXTURE (PS)

TYPE A	TYPE B (SLOPES 3:1 OR STEEPER)
15 OCTOBER TO 1 FEBRUARY K-31 FESCUE @ 5 LB / 1000 SF BORZY WINTER RYE @ 1/2 LB / 1000 SF	15 MARCH TO 1 MAY CROWN VETCH @ 1/2 LB / 1000 SF PERENNIAL RYEGRASS @1/2 LB / 1000 SF RED TOP @ 1/8 LB / 1000 SF
1 FEBRUARY TO 1 JUNE K-31 FESCUE @ 5 LB / 1000 SF ANNUAL RYE @ 1 /2 LB / 1 000 SF	15 AUGUST TO 1 OCTOBER CROWN VETCH @ 1/2 LB / 1000 SF PERENNIAL RYEGRASS @1/2 LB/1000 SF RED TOP @ 1/8 LB / 1000 SF
1 JUNE TO 1 SEPTEMBER K-31 FESCUE @ 5 LB / 1000 SF GERMAN MILLET @ 1 /2 LB / 1 000 SF	
1 SEPTEMBER TO 15 OCTOBER K-31 FESCUE 0 5 LB / 1000 SF ANNUAL RYE 0 1 /2 LB / 1 000 SF	

LIME: 140 LB / 1000 SF PULVERIZED AGRICULTURAL LIMESTONE

FERTILIZER: 5-20-10 0 25 LB / 1000 SF
38-0-0 0 7 LB / 1 000 SF

MULCH: IF REQUIRED, SHALL BE USED OVER ALL SEEDED AREAS AND SHALL BE APPLIED IN ACCORDANCE WITH SECTION 1.75 OF THE VIRGINIA EROSION AND SEDIMENT CONTROL HANDBOOK, LATEST EDITION.

SOIL CONDITIONING:
INCORPORATION OF LIME AND FERTILIZER, SELECTION OF CERTIFIED SEED, MULCHING, MAINTENANCE OF NEW SEEDLINGS, AND RESEEDING SHALL BE IN ACCORDANCE WITH SPECIFICATIONS CONTAINED WITHIN THE VIRGINIA SOIL EROSION AND SEDIMENT CONTROL HANDBOOK, LATEST EDITION. ADDITIONAL SEEDING TO BE PERFORMED AS REQUIRED BY THE INSPECTOR.

SEED APPLICATION:
APPLY SEED UNIFORMLY WITH A CYCLONE SEEDER, DRILL, CULTIPACKER SEEDER, OR HYDROSEEDER ON A FIRM, FIRIABLE, SEEDBED. MAXIMUM SEEDING DEPTH SHALL BE 1/4 INCH.

COMMONWEALTH OF VIRGINIA
ROBERT H. WAMPLER, JR.
Lic. No. 34713
8/21/14
PROFESSIONAL ENGINEER

ENGINEERING CONCEPTS, INC.
20 S. ROANOKE ST., PO BOX 619
FINCASTLE, VIRGINIA 24090
540.473.1253 FAX: 540.473.1254

No.	Revision	By	Appd.	Date
1	CITY REVIEW – 1	CJM	RHW	07/21/14

Drawn CJM
Designed CJM
Checked RHW
Approved RHW

PHASE 18
CURB, GUTTER, & SIDEWALK

SPRINGVALE STREET SE
ROANOKE CITY, VIRGINIA

SCALE: AS SHOWN
AUG. 21, 2014
PROJECT: 13030

4VAC5O-30-40 Minimum Standards.

The following minimum standards must be adhered to during the life of this project:

1. Permanent or temporary soil stabilization shall be applied to denuded areas within seven days after final grade is reached on any portion of the site. Temporary soil stabilization shall be applied within seven days to denuded areas that may not be at final grade but will remain dormant for longer than 30 days. Permanent stabilization shall be applied to areas that are to be left dormant for more than one year.
2. During construction of the project, soil stockpiles and borrow areas shall be stabilized or protected with sediment trapping measures. The applicant is responsible for the temporary protection and permanent stabilization of all soil stockpiles on site as well as borrow areas and soil intentionally transported from the project site.
3. A permanent vegetative cover shall be established on denuded areas not otherwise permanently stabilized. Permanent vegetation shall not be considered established until a ground cover is achieved that, is uniform, mature enough to survive and will inhibit erosion.
4. Sediment basins and traps, perimeter dikes, sediment barriers and other measures intended to trap sediment shall be constructed as a first step in any land-disturbing activity and shall be made functional before upslope land disturbance takes place.
5. Stabilization measures shall be applied to earthen structures such as dams, dikes and diversions immediately after installation.
6. Sediment traps and sediment basins shall be designed and constructed based upon the total drainage area to be served by the trap or basin.
   a. The minimum storage capacity of a sediment trap shall be 134 cubic yards per acre of drainage area and the trap shall only control drainage areas less than three acres.
   b. Surface runoff from disturbed areas that is comprised of flow from drainage areas greater than or equal to three acres shall be controlled by a sediment basin. The minimum storage capacity of a sediment basin shall be 134 cubic yards per acre of drainage area. The outfall system shall, at a minimum, maintain the structural integrity of the basin during a twenty-five year storm of 24-hour duration. Runoff coefficients used in runoff calculations shall correspond to a bare earth condition or those conditions expected to exist while the sediment basin is utilized.
7. Cut and fill slopes shall be designed and constructed in a manner that will minimize erosion. Slopes that are found to be eroding excessively within one year of permanent stabilization shall be provided with additional slope stabilizing measures until the problem is corrected.
8. Concentrated runoff shall not flow down cut or fill slopes unless contained within an adequate temporary or permanent channel, flume or slope drain structure.
9. Whenever water seeps from a slope face, adequate drainage or other protection shall be provided.
10. All storm sewer inlets that are made operable during construction shall be protected so that sediment-laden water cannot enter the conveyance system without first being filtered or otherwise treated to remove sediment.
11. Before newly constructed stormwater conveyance channels or pipes are made operational, adequate outlet protection and any required temporary or permanent channel lining shall be installed in both the conveyance channel and receiving channel.
12. When work in a live watercourse is performed, precautions shall be taken to minimize encroachment, control sediment transport and stabilize the work area to the greatest extent possible during construction. Nonerodible material shall be used for the construction of causeways and cofferdams. Earthen fill may be used for these structures if armored by nonerodible cover materials.
13. When a live watercourse must be crossed by construction vehicles more than twice in any six-month period, a temporary vehicular stream crossing constructed of nonerodible material shall be provided.
14. All applicable federal, state and local regulations pertaining to working in or crossing live watercourses shall be met.
15. The bed and banks of a watercourse shall be stabilized immediately after work in the watercourse is completed.
16. Underground utility lines shall be installed in accordance with the following standards in addition to other applicable criteria:
   a. No more than 500 linear feet of trench may be opened at one time.
   b. Excavated material shall be placed on the uphill side of trenches.
   c. Effluent from dewatering operations shall be filtered or passed through an approved sediment trapping device, or both, and discharged in a manner that does not adversely affect flowing streams or off-site property.
   d. Material used for backfilling trenches shall be properly compacted in order to minimize erosion and promote stabilization.
   e. Restabilization shall be accomplished in accordance with these regulations.
   f. Applicable safety regulations shall be complied with.
17. Where construction vehicle access routes intersect paved or public roads, provisions shall be made to minimize the transport of sediment by vehicular tacking onto the paved surface. Where sediment is transported onto a paved or public road surface, the road surface shall be cleaned thoroughly at the end of each day. Sediment shall be removed from the roads by shoveling or sweeping and transported to a sediment control disposal area. Street washing shall be allowed only after sediment is removed in this manner. This provision shall apply to individual development lots as well as to larger land-disturbing activities.
18. All temporary erosion and sediment control measures shall be removed within 30 days after final site stabilization or after the temporary measures are no longer needed, unless otherwise authorized by the local program authority. Trapped sediment and the disturbed soil areas resulting from the disposition of temporary measures shall be permanently stabilized to prevent further erosion and sedimentation.
19. Properties and waterways downstream from development sites shall be protected from sediment deposition, erosion and damage due to increases in volume, velocity and peak flow rate of stormwater runoff for the stated frequency storm of 24-hour duration in accordance with the following standards and criteria:
   a. Concentrated stormwater runoff leaving a development site shall be discharged directly into an adequate natural or man-made receiving channel, pipe or storm sewer system. For those sites where runoff is discharged into a pipe or pipe system, downstream stability analyses at the outfall of the pipe or pipe system shall be performed.
   b. Adequacy of all channels and pipes shall be verified in the following manner:
      (1) The applicant shall demonstrate that the total drainage area to the point of analysis within the channel is one hundred times greater than the contributing drainage area of the project in question; or
      (2) (a) Natural channels shall be analyzed by the use of a two-year storm to verify, that stormwater will not overtop channel banks nor cause erosion of channel bed or banks; and
      (b) All previously constructed man-made channels shall be analyzed by the use of a ten-year storm to verify' that stormwater will not overtop its banks and by the use of a two-year storm to demonstrate that stormwater will not cause erosion of channel bed or banks; and Pipes and storm sewer systems shall be analyzed by the use of a ten-year storm to verify that stormwater will be contained within the pipe or system.

c. If existing natural receiving channels or previously constructed man-made channels or pipes are not adequate, the applicant shall:
   (1) Improve the channel to a condition where a ten-year storm will not overtop the banks and a two-year storm will not cause erosion to the channel bed or banks; or
   (2) Improve the pipe or pipe system to a condition where the ten-year storm is contained within the appurtenances; or
   (3) Develop a site design that will not cause the pre-development peak runoff rate from a two-year storm to increase when runoff outfalls into a natural channel or will not cause the re-development peak runoff rate from a ten-year storm to increase when runoff outfalls into a man-made channel; or
   (4) Provide a combination of channel improvement, stormwater detention or other measures which is satisfactory to the plan-approving authority to prevent downstream erosion.

a. The applicant shall provide evidence of permission to make the improvements.
b. All hydrologic analyses shall be based on the existing watershed characteristics and the ultimate development of the subject project.
   If the applicant chooses an option that includes stormwater detention he shall obtain approval from the locality of a plan for maintenance of the detention facilities. The plan shall set forth the maintenance requirements of the facility and the person responsible for performing the maintenance.
c. Outfall from a detention facility shall be discharged to a receiving channel, and energy dissipators shall be placed at the outfall of all detention facilities as necessary to provide a stabilized transition from the facility to the receiving channel.
d. All on-site channels must be verified to be adequate.
e. Increased volumes of sheet flows that may cause erosion or sedimentation on adjacent property shall be diverted to a stable outlet, adequate channel, pipe or pipe system, or to a detention facility.
f. In applying these stormwater runoff criteria, individual lots or parcels in a residential, commercial or industrial development shall not be considered to be separate development projects. Instead, the development, as a whole, shall be considered to be a single development project. Hydrologic parameters that reflect the ultimate development condition shall be used in all engineering calculations.
g. All measures used to protect properties and waterways shall be employed in a manner which minimizes impacts on the physical, chemical and biological integrity of rivers, streams and other waters of the state.

ES–1: UNLESS OTHERWISE INDICATED, ALL VEGETATIVE AND STRUCTURAL EROSION AND SEDIMENT CONTROL PRACTICES WILL BE CONSTRUCTED AND MAINTAINED ACCORDING TO MINIMUM STANDARDS AND SPECIFICATIONS OF THE VIRGINIA EROSION AND SEDIMENT CONTROL HANDBOOK AND VIRGINIA REGULATIONS VR 625–02–00 EROSION AND SEDIMENT CONTROL REGULATIONS.

ES–2: THE PLAN APPROVING AUTHORITY MUST BE NOTIFIED ONE WEEK PRIOR TO THE ONSITE PRECONSTRUCTION CONFERENCE, ONE WEEK PRIOR TO THE COMMENCEMENT OF LAND DISTURBING ACTIVITY, AND ONE WEEK PRIOR TO THE FINAL INSPECTION.

ES–3: ALL EROSION AND SEDIMENT CONTROL MEASURES ARE TO BE PLACED PRIOR TO OR AS THE FIRST STEP IN CLEARING.

ES–4: A COPY OF THE APPROVED EROSION AND SEDIMENT CONTROL PLAN & NARRATIVE, AS WELL AS A COPY OF THE LAND DISTURBING PERMIT, SHALL BE MAINTAINED ON THE SITE AT ALL TIMES. THE EROSION AND SEDIMENT CONTROL ADMINISTRATOR WILL DELIVER THESE MATERIALS AT THE ONSITE PRECONSTRUCTION CONFERENCE.

ES–5: PRIOR TO COMMENCING LAND DISTURBING ACTIVITIES IN AREAS OTHER THAN INDICATED ON THESE PLANS (INCLUDING, BUT NOT LIMITED TO, OFF–SITE BORROW OR WASTE AREAS), THE CONTRACTOR SHALL SUBMIT A SUPPLEMENTARY EROSION CONTROL PLAN TO THE OWNER FOR REVIEW AND APPROVAL BY THE PLAN APPROVING AUTHORITY.

ES–6: THE CONTRACTOR IS RESPONSIBLE FOR INSTALLATION OF ANY ADDITIONAL EROSION CONTROL MEASURES NECESSARY TO PREVENT EROSION AND SEDIMENTATION AS DETERMINED BY THE PLAN APPROVING AUTHORITY.

ES–7: ALL DISTURBED AREAS ARE TO DRAIN TO APPROVED SEDIMENT CONTROL MEASURES AT ALL TIMES DURING THE LAND DISTURBING ACTIVITIES AND DURING SITE DEVELOPMENT UNTIL FINAL STABILIZATION IS ACHIEVED.

ES–8: DURING DEWATERING OPERATIONS, WATER WILL BE PUMPED INTO AN APPROVED FILTERING DEVICE.

ES–9: THE CONTRACTOR SHALL INSPECT ALL EROSION CONTROL MEASURES PERIODICALLY AND AFTER EACH RUNOFF–PRODUCING RAINFALL EVENT. ANY NECESSARY REPAIRS OR CLEANUP TO MAINTAIN THE EFFECTIVENESS OF THE EROSION CONTROL DEVICES SHALL BE MADE IMMEDIATELY. AN INSPECTION REPORT MUST BE FILED WITH THE BOTETOURT COUNTY EROSION AND SEDIMENT CONTROL ADMINISTRATOR ONCE EVERY TWO WEEKS, BEGINNING WITH COMMENCEMENT OF THE LAND DISTURBING ACTIVITY, AND WITHIN 48 HOURS OF ANY RUNOFF–PRODUCING RAINFALL EVENT. FAILURE TO SUBMIT A REPORT WILL BE GROUNDS FOR IMMEDIATE REVOCATION OF THE LAND DISTURBING PERMIT. REPORTS MUST BE POSTMARKED WITHIN 24 HOURS OF THE DEADLINE. A STANDARD INSPECTION REPORT FORM WILL BE SUPPLIED, WHICH SHOULD BE COPIED AS NECESSARY. THE PROVISION IN NO WAY WAIVES THE RIGHTS OF BOTETOURT COUNTY PERSONNEL TO CONDUCT SITE INSPECTIONS, NOR DOES IT DENY THE RIGHT OF THE PERMITTEE(S) TO ACCOMPANY THE INSPECTOR(S).

(TS) (PS) PERMANENT SEEDING MIXTURE

TYPE A

15 OCTOBER TO 1 FEBRUARY
K–31 FESCUE @ 5 LB / 1000 SF
BORZY WINTER RYE @ 1/2 LB / 1000 SF

1 FEBRUARY TO 1 JUNE
K–31 FESCUE @ 5 LB / 1000 SF
ANNUAL RYE @ 1/2 LB / 1000 SF

1 JUNE TO 1 SEPTEMBER
K–31 FESCUE @ 5 LB / 1000 SF
GERMAN MILLET @ 1/2 LB / 1000 SF

1 SEPTEMBER TO 15 OCTOBER
K–31 FESCUE @ 5 LB / 1000 SF
ANNUAL RYE @ 1/2 LB / 1000 SF

TYPE B (SLOPES 3:1 OR STEEPER)

15 MARCH TO 1 MAY
CROWN VETCH @ 1/2 LB / 1000 SF
PERENNIAL RYE GRASS @ 1/2 LB / 1000 SF
RED TOP @ 1/8 LB / 1000 SF

15 AUGUST TO 1 OCTOBER
CROWN VETCH @ 1/2 LB / 1000 SF
PERENNIAL RYE GRASS @ 1/2 LB / 1000 SF
RED TOP @ 1/8 LB / 1000 SF

LIME: 140 LB / 1000 SF PULVERIZED AGRICULTURAL LIMESTONE

FERTILIZER: 5–20–10 @ 25 LB / 1000 SF
38–0–0 @ 7 LB / 1000 SF

MULCH: IF REQUIRED, SHALL BE USED OVER ALL SEEDED AREAS AND SHALL BE APPLIED IN ACCORDANCE WITH SECTION 1.75 OF THE VIRGINIA EROSION AND SEDIMENT CONTROL HANDBOOK, LATEST EDITION.

SOIL CONDITIONING: INCORPORATION OF LIME AND FERTILIZER, SELECTION OF CERTIFIED SEED, MULCHING, MAINTENANCE OF NEW SEEDLINGS, AND RESEEDING SHALL BE IN ACCORDANCE WITH SPECIFICATIONS CONTAINED WITHIN THE VIRGINIA SOIL EROSION AND SEDIMENT CONTROL HANDBOOK, LATEST EDITION. ADDITIONAL SEEDING TO BE PERFORMED AS REQUIRED BY THE INSPECTOR.

SEED APPLICATION: APPLY SEED UNIFORMLY WITH A CYCLONE SEEDER, DRILL, CULTIPACKER SEEDER, OR HYDROSEEDER ON A FIRM, FRIABLE, SEEDBED. MAXIMUM SEEDING DEPTH SHALL BE 1/4 INCH.

NO.	TITLE	KEY	SYMBOL	NO.	TITLE	KEY	SYMBOL
3.01	SAFETY FENCE	SAF	SAF	3.20	ROCK CHECK DAMS	CD	
3.02	TEMPORARY GRAVEL CONSTRUCTION ENTRANCE	CE		3.21	LEVEL SPREADER	LS	
3.03	CONSTRUCTION ROAD STABILIZATION	CRS	CRS	3.22	VEGETATIVE STREAMBANK STABILIZATION	VSS	VSS
3.04	STRAW BALE BARRIER	STB		3.23	STRUCTURAL STREAMBANK STABILIZATION	SSS	SSS
3.05	SILT FENCE	SF		3.24	TEMPORARY VEHICULAR STREAM CROSSING	VSC	
3.06	BRUSH BARRIER	BB		3.25	UTILITY STREAM CROSSING	USC	
3.07	STORM DRAIN INLET PROTECTION	IP		3.26	DEWATERING STRUCTURE	DS	
3.08	CULVERT INLET PROTECTION	CIP		3.27	TURBIDITY CURTAIN	TC	
3.09	TEMPORARY DIVERSION DIKE	DD	DD	3.28	SUBSURFACE DRAIN	SD	
3.10	TEMPORARY FILL DIVERSION	FD	FD	3.29	SURFACE ROUGHENING	SR	SR
3.11	TEMPORARY RIGHT–OF–WAY DIVERSION	RWD	RWD	3.30	TOPSOILING	TO	TO
3.12	DIVERSION	DV	DV	3.31	TEMPORARY SEEDING	TS	TS
3.13	TEMPORARY SEDIMENT TRAP	ST		3.32	PERMANENT SEEDING	PS	PS
3.14	TEMPORARY SEDIMENT BASIN	SB		3.33	SODDING	SO	SO
3.15	TEMPORARY SLOPE DRAIN	TSD	TSD	3.34	BERMUDA GRASS AND ZOYSIAGRASS ESTABLISHMENT	BE ZO	BE OR ZO
3.16	PAVED FLUME	PF	PF	3.35	MULCHING	MU	MU
3.17	STORMWATER CONVEYANCE CHANNEL	SCC		3.36	SOIL STABILIZATION BLANKETS AND MATTING	B/M	TREAT. 1 TREAT. 2
3.18	OUTLET PROTECTION	OP		3.37	TREES, SHRUBS, VINES AND GROUND COVERS	VEG	VEG
3.19	RIPRAP	RR		3.38	TREE PRESERVATION AND PROTECTION	TP	TP
				3.39	DUST CONTROL	DC	DC

(SF) CONSTRUCTION OF A SILT FENCE (WITHOUT WIRE SUPPORT)

1. SET THE STAKES.
2. EXCAVATE A 4"X 4" TRENCH UPSLOPE ALONG THE LINE OF STAKES.

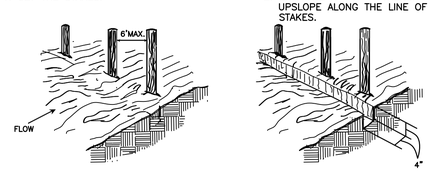

3. STAPLE FILTER MATERIAL TO STAKES AND EXTEND IT INTO THE TRENCH.
4. BACKFILL AND COMPACT THE EXCAVATED SOIL.

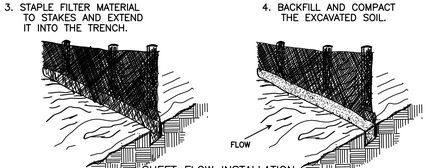

SHEET FLOW INSTALLATION (PERSPECTIVE VIEW)

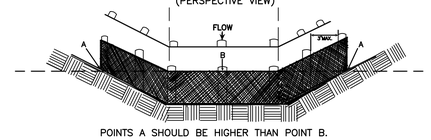

POINTS A SHOULD BE HIGHER THAN POINT B.

DRAINAGEWAY INSTALLATION (FRONT ELEVATION)

SOURCE: Adapted from Installation of Straw and Fabric Filter Barriers for Sediment Control,VA. DSWC Sherwood and Wyant

PLATE. 3.05–2

(IP) GRAVEL CURB INLET SEDIMENT FILTER

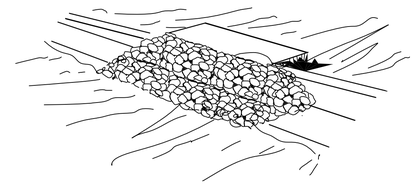

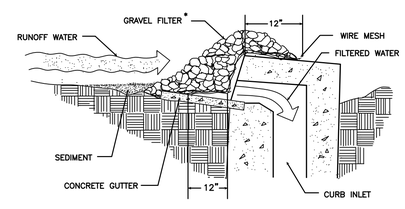

SPECIFIC APPLICATION

THIS METHOD OF INLET PROTECTION IS APPLICABLE AT CURB INLETS WHERE PONDING IN FRONT OF THE STRUCTURE IS NOT LIKELY TO CAUSE INCONVENIENCE OR DAMAGE TO ADJACENT STRUCTURES AND UNPROTECTED AREAS.

* GRAVEL SHALL BE VDOT #3, #357 OR 5 COARSE AGGREGATE.

SOURCE: VA. DSWC

PLATE 3.07–6

(CIP) SILT FENCE CULVERT INLET PROTECTION

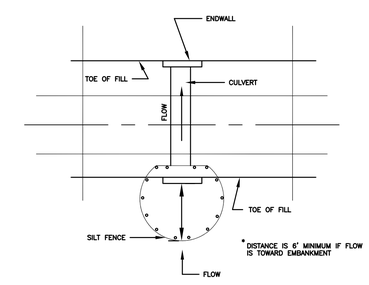

* OPTIONAL STONE COMBINATION

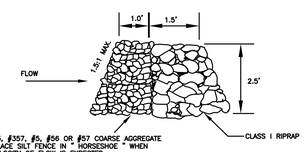

*VDOT #3, #357, #5, #56 OR #57 COARSE AGGREGATE TO REPLACE SILT FENCE IN " HORSESHOE " WHEN HIGH VELOCITY OF FLOW IS EXPECTED

SOURCE: ADAPTED from VDOT Standard Sheets and Va. DSWC

PLATE. 3.08–1

ENGINEERING CONCEPTS, INC.
20 S. ROANOKE ST., PO BOX 619
FINCASTLE, VIRGINIA 24090
540.473.1253 FAX: 540.473.1254

COMMONWEALTH OF VIRGINIA
ROBERT H. WAMPLER, JR.
Lic. No. 34713
8/21/14
PROFESSIONAL ENGINEER

Drawn CJM	PHASE 18 CURB, GUTTER, & SIDEWALK	SCALE: AS SHOWN
Designed CJM		AUG. 21, 2014
Checked RHW	SPRINGVALE STREET SE ROANOKE CITY, VIRGINIA	PROJECT: 13030
Approved RHW		5 OF 5

COMMONWEALTH OF VIRGINIA
ROBERT H. WAMPLER, JR
Lic. No. 34713
8/21/14
PROFESSIONAL ENGINEER

ENGINEERING CONCEPTS, INC.
20 S. ROANOKE ST., PO BOX 619
FINCASTLE, VIRGINIA 24090
540.473.1253 FAX: 540.473.1254

50 0 50 100 150
Scale 1" = 50'

Drawn CJM	PHASE 18 CURB, GUTTER, & SIDEWALK	1"=50'
Designed CJM		AUG. 21, 2014
Checked RHW	SPRINGVALE STREET SE DA ROANOKE CITY, VIRGINIA	PROJECT: 13030
Approved RHW		1 OF 2

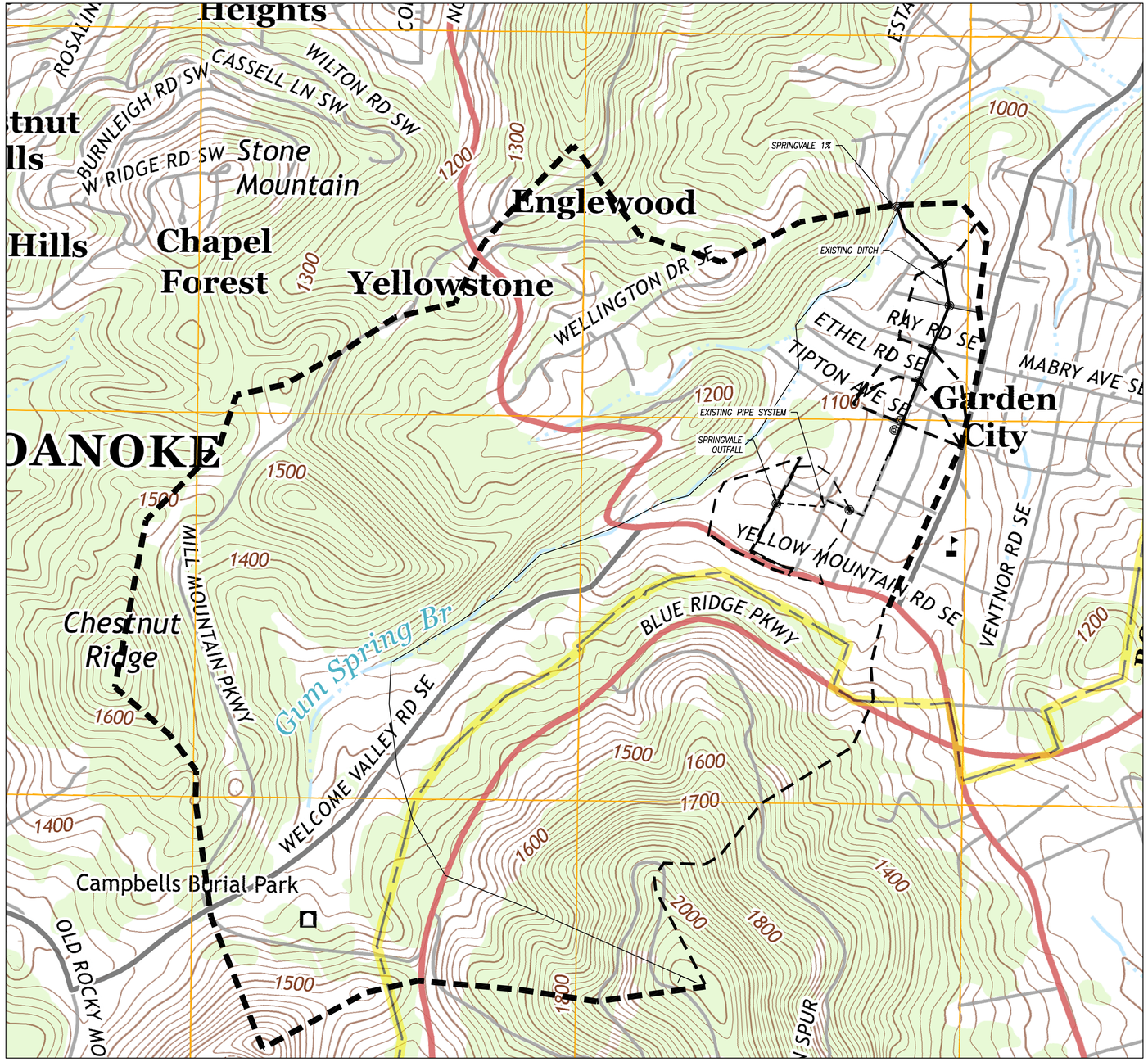

COMMONWEALTH OF VIRGINIA
ROBERT H. WAMPLER, JR.
Lic. No. 34713
8/21/14
PROFESSIONAL ENGINEER

ENGINEERING CONCEPTS, INC.
20 S. ROANOKE ST., PO BOX 619
FINCASTLE, VIRGINIA 24090
540.473.1253 FAX: 540.473.1254

Drawn CJM	PHASE 18 CURB, GUTTER, & SIDEWALK DRAINAGE MAP	SCALE: 1"=500'
Designed CJM		AUG. 21, 2014
Checked RHW	SPRINGVALE AVENUE SE ROANOKE CITY, VIRGINIA	PROJECT: 13030
Approved RHW		2 OF 2