WILLIAMSON ROAD LIBRARY

ROANOKE, VIRGINIA

3837 WILLIAMSON RD, ROANOKE VA, 24012

CONSTRUCTION DOCUMENTS

PROJECT INDEX

CIVIL

C0.01	CIVIL COVER SHEET
C1.01	EXISTING CONDITIONS & DEMO PLAN
C2.01	SITE & UTILITY PLAN
C3.01	GRADING & STORM DRAINAGE PLAN
C4.01	DETAILS & SECTIONS
C4.02	DETAILS & SECTIONS
C4.03	DETAILS & SECTIONS
C4.04	DETAILS & SECTIONS
C5.01	EROSION & SEDIMENT CONTROL PLAN
C5.02	EROSION & SEDIMENT CONTROL NARRATIVE
C5.03	EROSION & SEDIMENT MS-19 COMPLIANCE
C5.04	EROSION & SEDIMENT DETAILS
C6.01	LANDSCAPE PLAN

ARCHITECTURAL

A0.01	LIFE SAFETY & CODE PLAN
A0.02	DEMOLITION PLANS
A1.01	ARCHITECTURAL SITE PLAN
A2.01	BUILDING PLAN
A3.01	ROOF PLAN
A4.01	BUILDING ELEVATIONS
A5.01	BUILDING SECTIONS
A6.01	WALL SECTIONS
A6.02	WALL SECTIONS
A6.03	WALL SECTIONS
A6.04	WALL SECTIONS
A6.05	WALL SECTIONS
A6.06	WALL SECTIONS
A6.07	WALL SECTIONS
A6.08	WALL SECTIONS
A7.01	PLAN DETAILS
A7.02	PLAN DETAILS
A7.03	PLAN DETAILS
A8.01	BATHROOM PLANS & ELEVATIONS
A8.02	BATHROOM PLANS & ELEVATIONS
A8.03	MILLWORK PLAN & ELEVATIONS
A8.04	DESK ELEVATIONS AND DETAILS
A8.05	MILLWORK DETAILS
A8.06	INTERIOR ELEVATIONS
A8.07	INTERIOR ELEVATIONS AND ENLARGED PLANS
A8.08	ENLARGED PLANS & DETAILS
A8.09	ENLARGED PLANS & DETAILS
A8.10	ENLARGED PLANS & DETAILS
A9.01	PARTITION TYPES
A9.02	PARTITION TYPES
A9.03	DOOR SCHEDULE
A9.04	FINISH SCHEDULE
A9.05	FINISH TRANSITIONS
A10.01	REFLECTED CEILING PLAN
A10.02	CEILING DETAILS
A10.03	CEILING DETAILS
A11.01	ALTERNATES
A11.02	ALTERNATES
A11.03	ALTERNATES

STRUCTURAL

S0.01	GENERAL STRUCTURAL NOTES
S0.02	GENERAL STRUCTURAL NOTES
S1.01	FOUNDATION PLAN
S1.02	MAIN ROOF FRAMING PLAN
S1.03	CANOPY ROOF FRAMING PLAN
S1.04	PARTIAL FDN & FRAMING PLANS ALT NO. 6
S2.01	TYPICAL FOUNDATION DETAILS
S2.02	FOUNDATION SECTIONS & DETAILS
S2.03	FOUNDATION SECTIONS & DETAILS
S3.01	TYPICAL ROOF FRAMING DETAILS
S3.02	TYPICAL ROOF DETAILS
S3.03	ROOF SECTIONS & DETAILS & JOIST REINFORCEMENT
S3.04	ROOF SECTIONS & DETAILS
S3.05	ROOF SECTIONS & DETAILS
S3.06	ROOF SECTIONS & DETAILS
S3.07	ROOF SECTIONS & DETAILS
S4.01	STRAPPED BRACED WALL ELEVATIONS & DETAILS
S4.02	STRAPPED BRACED WALL ELEVATIONS & DETAILS
S5.01	LINTELS

PLUMBING

P0.01	LEGEND, SCHEDULES, NOTES & DETAILS
P1.01	FIRST FLOOR DEMOLITION PLAN
P2.01	FOUNDATION PLAN
P2.02	FIRST FLOOR SANITARY PLAN
P2.03	FIRST FLOOR DOMESTIC WATER PLAN
P3.01	ENLARGED TOILET PLANS

MECHANICAL

M0.01	EQUIPMENT NOTES, LEGEND, & DETAILS
M1.01	DEMO & NEW WORK PLAN
M2.01	DDC CONTROLS

ELECTRICAL

E0.01	SCHEDULES, LEGEND & DETAILS
E0.02	DETAILS
E1.01	FIRST FLOOR DEMOLITION PLAN
E2.01	FIRST FLOOR LIGHTING PLAN
E3.01	FIRST FLOOR POWER PLAN
E3.02	ROOF POWER PLAN
E4.01	FIRST FLOOR LOW VOLTAGE PLAN
E5.01	PANEL BOARD SCHEDULE
E6.01	SITE PLAN
E6.02	SITE PLAN PHOTOMETRICS

VICINITY MAP

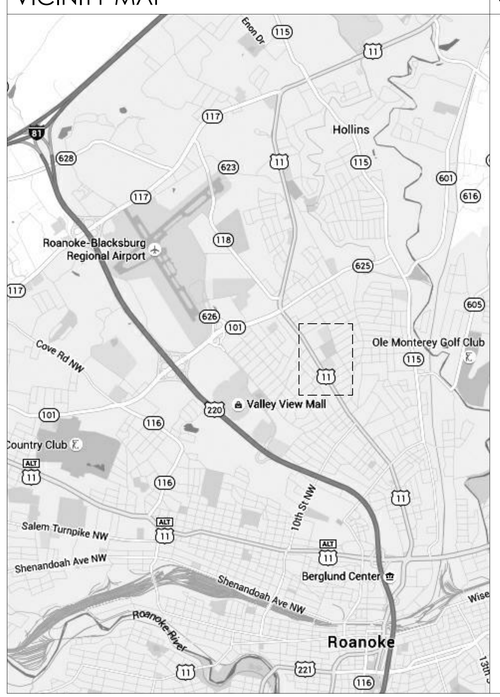

GENERAL NOTES

1. ALL WORK AND MATERIALS SHALL COMPLY WITH ALL LOCAL AND GOVERNING CODES.
2. ALL WORK AND MATERIALS SHALL BE PROVIDED AND INSTALLED BY QUALIFIED PERSONNEL IN A WORKMANLIKE MANNER.
3. ALL PRODUCTS SHALL BE NEW, BEST OF THEIR KIND, AND INSTALLED IN ACCORDANCE WITH THE MANUFACTURER'S INSTRUCTIONS.
4. CONTRACTOR SHALL VERIFY EXISTING CONDITIONS IN THE FIELD PRIOR TO BEGINNING CONSTRUCTION OR ORDERING MATERIALS. SHOULD THE CONTRACTOR FINDDISCREPANCIES, OMISSIONS, AMBIGUITIES, OR CONFLICTS WITHIN THE CONSTRUCTION DOCUMENTS, OR SHOULD HE BE IN DOUBT AS TO THEIR MEANING OINTENTION, HE SHOULD NOTIFY THE ARCHITECT FOR CLARIFICATION. DURING CONSTRUCTION, THE CONTRACTOR MAY EXPOSE CONDITIONS THAT ARE UNSTABLE OR UNSAFE. IFCONTRACTOR FINDS SUCH CONDITIONS, HE SHALL TAKE EMERGENCY ACTION TO STABILIZE THE CONDITIONS AND NOTIFY THE OWNER AND ARCHITECT IMMEDIATELY.
5. CONTRACTOR SHALL COORDINATE THE WORK OF ALL SUBCONTRACTORS. IT IS THE GENERAL CONTRACTOR'S RESPONSIBILITY TO BID ALL PARTS OICONSTRUCTION DOCUMENTS TO ALL SUBCONTRACTORS. THE ENTIRE SET OF CONSTRUCTION DOCUMENTS IS COHESIVE AND HOLISTIC FOR ALL TRADES.
6. CONTRACTOR SHALL COORDINATE ALL REQUIRED UTILITY WORK.
7. CONTRACTOR SHALL MAINTAIN A CLEAN AND SECURE WORK SITE AT ALL TIMES.
8. CONTRACTOR SHALL PROVIDE ALL REQUIRED EROSION CONTROL DEVICES, CONSTRUCTION BARRICADES, AND PROTECTIVE DEVICES DURING CONSTRUCTION.
9. CONTRACTOR SHALL MAINTAIN FIRE EXTINGUISHING EQUIPMENT AT THE WORK AREA AT ALL TIMES.
10. DIMENSIONS ARE TO FINISH SURFACE UNLESS OTHERWISE NOTED
11. ALL DIMENSIONS SHALL BE CHECKED AND VERIFIED PRIOR TO PROCEEDING WITH THE WORK OR ORDERING MATERIALS. NOTIFY THE ARCHITECT OF ANY DISCREPANCIES OR CONFLICTS.
12. ALL FRAMING WOOD IN CONTACT WITH CONCRETE OR MASONRY SHALL BE PRESSURE TREATED TO PREVENT ROT AND DECAY.
13. PROVIDE SEALANT AND BACKER ROD AT ALL WOOD, METAL, AND CONCRETE JOINTS. CAULK BETWEEN MASONRY AND OTHER MATERIALS.
14. ISOLATE DISSIMILAR METALS TO PREVENT GALVANIC ACTION OR CORROSION.
15. ALL PIPES, DUCTS, VENTS, WIRES, ETC. ARE TO BE CONCEALED.
16. PROVIDE ALL MATERIALS, LABOR, AND EQUIPMENT NECESSARY TO COMPLETE THE WORK.
17. DO NOT USE OPEN FLAMES, HEATING EQUIPMENT, CUTTING EQUIPMENT OR OTHER TOOLS IN A WAY THAT WOULD IGNITE COMBUSTIBLE CONSTRUCTION ORMATERIALS.
18. MAINTAIN ALL STATUTORY REQUIRED INSURANCE FOR THE PROJECT. SUBMIT A CERTIFICATE OF INSURANCE TO THE OWNER FOR REVIEW BY THE OWNER'S INSURANCAGENT.
19. UPDATE THE ARCHITECT AND THE OWNER ON THE PROGRESS OF THE WORK ON A REGULAR BASIS. PROVIDE A SCHEDULE FOR THE PROJECT. PROVIDE ACCESS AND ALLOWARCHITECT TO REVIEW THE CONSTRUCTION THROUGHOUT THE PROJECT.
20. PROVIDE DAMP PROOFING ON ALL WALLS BELOW GRADE, AND ALL MASONRY WALL SURFACES INSIDE WALL CAVITIES.
21. PROVIDE PREFABRICATED END DAMS, CORNERS, AND TRANSITIONS AT ALL FLASHING AREAS.
22. PROVIDE CONTROL JOINTS AND EXPANSION JOINTS AS RECOMMENDED BY MANUFACTURERS AND AS REQ BY INDUSTRY STANDARDS. MASONRY EXPANSION JOINTS SHALL BE LOCATED NEAR BUILDING CORNERS AND MAJOR WINDOWS. JOINTS SHALL NOT EXCEED 20'-0" O.C. UNLESS APPROVED BY ARCHITECT. REVIEW EXPANSION JOINT LOCATIONS WITH ARCHITECT PRIOR TO INSTALLATION.
23. PAINT ALL EXPOSED METAL, WOOD, AND SIMILAR FINISHES UNLESS NOTED OTHERWISE

SYMBOLS

SECTION TAG — 1 / A1.01

ELEVATION TAG — 1 / A1.01

ELEVATION TAG, MULTIPLE — 1 / A1.01 / 4 / 2 / 3

DETAIL TAG — 1 / A1.01

PARTITION TYPE

ROOM TAG

WORK POINT

ELEVATION INDICATOR — 0'-0" FIRST FLOOR

DIMENSION STYLE — #'-#"

DOOR TAG — #

ABBREVIATIONS

ABV	ABOVE
AFF	ABOVE FINISH FLOOR
ALUM	ALUMINUM
CMU	CONCRETE MASONRY
CONC	CONCRETE
CONT	CONTINUOUS
COOR	COORDINATE
DIA	DIAMETER
DWG	DRAWING
EA	EACH
GPDW	GYPSUM DRYWALL
HDWD	HARD WOOD
HSS	HOLLOW STAINLESS STEEL
MAX	MAXIMUM
MIN	MINIMUM
NIC	NOT IN CONTRACT
O.C.	ON CENTER
OPP.	OPPOSITE
PLAM	PLASTIC LAMINATE
PLYWD	PLYWOOD
PTL	PORCELAIN TILE
PNTD	PAINTED
REF	REFERENCE
REQ	REQUIRED
SIM	SIMILAR
SS	STAINLESS STEEL
STL	STEEL
STND	STAINED
STE	STRUCTURE
THK	THICK
TWF	THROUGH WALL FLASHING
TYP	TYPICAL
UON	UNLESS OTHERWISE NOTED

DEDUCT ALTERNATES

ALTERNATE #1
ELIMINATE MAIN BUILDING SITE SIGN

ALTERNATE #2
ELIMINATE ART WALK PAVING

ALTERNATE #3
ELIMINATE READING GARDEN

ALTERNATE #4
ELIMINATE ACOUSTIC WALL PANELS FROM COMMUNITY ROOM

ALTERNATE #5
ELIMINATE WOOD WALL COVERINGS

ALTERNATE #6
REMOVE 6' FROM THE LENGTH OF THE COMMUNITY ROOM

PROJECT TEAM

OWNER
CITY OF ROANOKE
215 CHURCH AVENUE S.W.
ROANOKE, VIRGINIA 24011
(540) 853-2731

ARCHITECT
ENTEROS DESIGN, PC
314 EXCHANGE ALLEY
SUITE A
PETERSBURG, VIRGINIA 23803
(804) 861-1200

ENGBERG ANDERSON
320 EAST BUFFALO STREET
SUITE 500
MILWAUKEE, WISCONSIN 53202
(414) 944-9000

CIVIL
MATTERN & CRAIG
701 FIRST STREET S.W.
ROANOKE, VIRGINIA 24016
(540) 345-9342

STRUCTURAL
DMWPV, PLLC
1025 BOULDERS PKWY
SUITE 310
RICHMOND, VA 23225
(804) 323-0656

MECH / ELEC/ PLUMBING
ASCENT ENGINEERING GROUP
4932 FRONTAGE ROAD N.W.
ROANOKE, VIRGINIA 24019
(540) 265-4444

ENTEROS DESIGN

314 EXCHANGE ALLEY
PETERSBURG, VA 23804

804.861.1200 P
804.861.1253 F

All ideas, designs, arrangements and plans indicated or represented by this drawing are property of ENTEROS DESIGN, PC; created, evolved and developed for the sole use of this project. These ideas, design arrangements and/or plans shall not be used by or disclosed to any person, firm or corporation for any purpose without written permission from ENTEROS DESIGN, PC. Written dimensions on these drawings shall have precedence over scaled dimensions. Contractors shall verify and be responsible for all dimensions and conditions on the job. The Architect must be notified of any variations from the dimensions and conditions shown on these drawings.
© 2016 ENTEROS DESIGN, PC

WILLIAMSON ROAD LIBRARY

3837 Williamson Road, Roanoke, VA 24012

CONSTRUCTION DOCUMENTS

REVISIONS:

COVER SHEET

PROJ. NO.:156003 DRAWN BY:TRF
DATE: 04.13.16

COMMONWEALTH OF VIRGINIA
GILBERT WILBURN ENGLEMINGER
Lic. No. 011615
4/13/16
ARCHITECT

CS

WILLIAMSON ROAD LIBRARY

3837 WILLIAMSON ROAD, N.W.
CITY OF ROANOKE, VIRGINIA
TAX NUMBER: 2090601

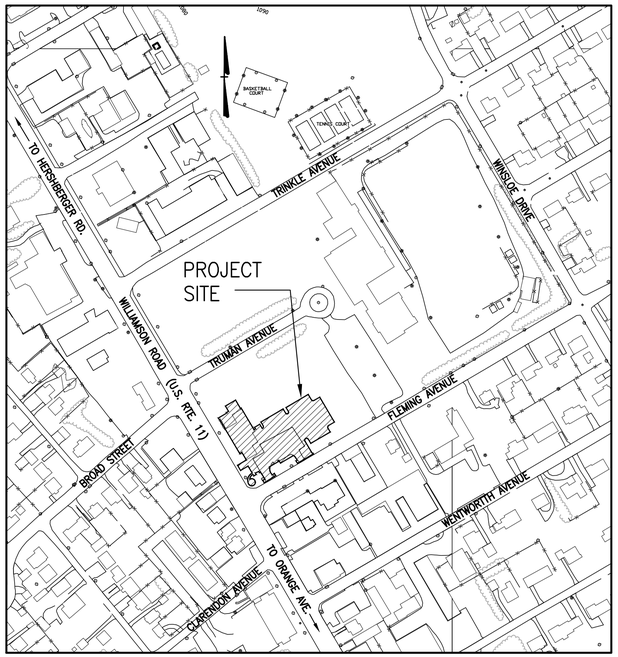

LOCATION MAP
NO SCALE

City of Roanoke– Construction Procedure Requirements:

1. Right–of–Way Excavation Permit – Prior to the commencement of any digging, alteration or construction within the public right–of–way (streets, alleys, public easements), a right–of–way excavation permit shall be applied for and obtained by the contractor from the City of Roanoke.

2. Land Disturbance Permit – An approved erosion and sediment control plan for any borrow/fill sites associated with the project must be submitted prior to the issuance of a land disturbance permit.

3. Plans and Permits – A copy of the plans as approved by the City (signed by the proper City officials) and all permits issued by the City shall be available at the construction site at all times of ongoing construction.

4. Location of Utilities – The contractor shall verify the location of all existing utilities prior to the commencement of any construction.

5. Construction Entrance – The contractor shall install an adequate construction entrance for all construction related egress from the site. Size and composition of construction entrance shall be as shown on the plans.

6. Streets to Remain Clean – It shall be the responsibility of the contractor to insure that the public street adjacent to the construction entrance remains free of mud, dirt, dust, and/or any type of construction materials or litter at all times.

7. Barricades/Ditches – The contractor shall maintain the integrity of all excavated ditches and shall furnish and ensure that all barricades proper and necessary for the safety of the public are in place.

8. Sewer and Pavement Replacement – Construction of sanitary sewers and the replacement of pavement shall be in accordance with approved standards and specifications of the City of Roanoke and the Western Virginia Water Authority

9. Approved Plans/Construction Changes – Any change or variation from construction design as shown on the officially approved plans shall be approved by the erosion and sediment control agent prior to said changes or variation in construction being made.

10. Final Acceptance/City – The owner or developer shall furnish the City of Roanoke's Planning Building and Development Department with a field surveyed final correct set of as–built plans of the newly constructed storm rain and/or stormwater management facilities prior to final acceptance and issuance of a certificate of occupancy by e City. As–built plans shall be provided in the State Plane Virginia South Coordinate System, NAD 1983, FIPS 4502 Feet, US Survey Feet, Datum NA 83, in the form of 1 paper copy and 1 digital AUTOCAD file.

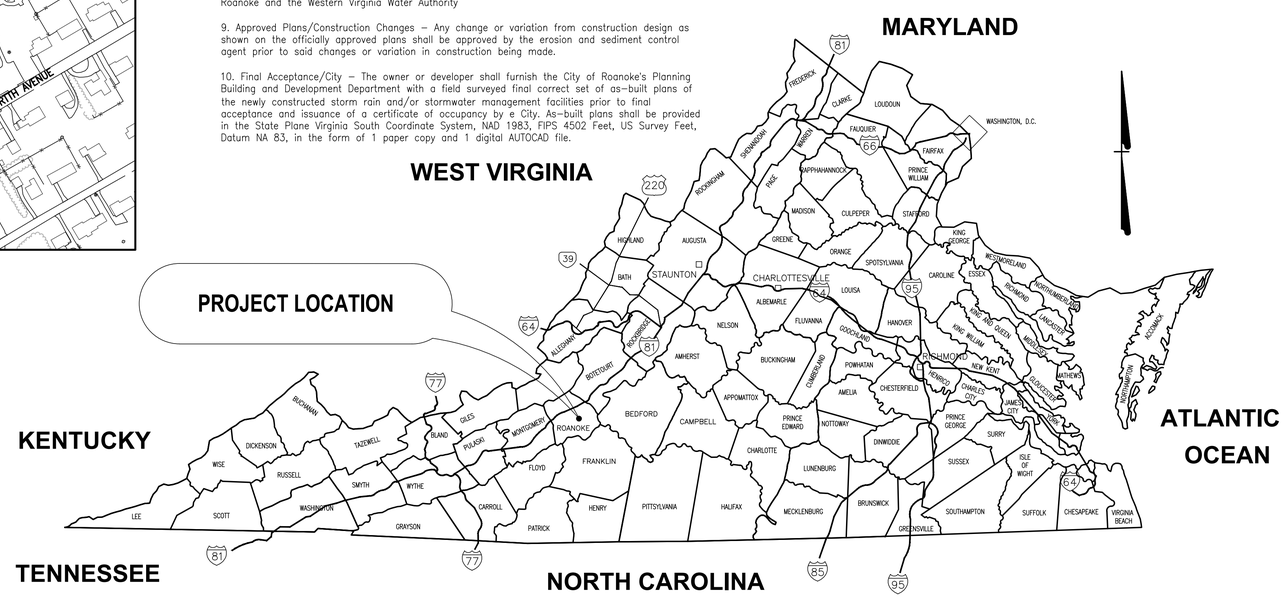

LIST OF SHEETS:

C0.01	SITE DEVELOPMENT COVER SHEET (CITY OF ROANOKE)
C1.01	EXISTING CONDITIONS / DEMOLITION & REMOVAL PLAN
C2.01	SITE & UTILITY PLAN
C3.01	GRADING & STORM DRAINAGE PLAN
C4.01	DETAILS & SECTIONS
C4.02	DETAILS & SECTIONS
C4.03	DETAILS & SECTIONS
C4.04	DETAILS & SECTIONS
C5.01	EROSION & SEDIMENT CONTROL PLAN
C5.02	EROSION & SEDIMENT CONTROL NARRATIVE
C5.03	EROSION & SEDIMENT CONTROL STATEMENT OF COMPLIANCE (MS–19)
C5.04	EROSION & SEDIMENT – DETAILS
C6.01	LANDSCAPE PLAN

OWNER:
CITY OF ROANOKE
OFFICE OF THE CITY ENGINEER
215 CHURCH AVENUE, S.W.
MUNICIPAL SOUTH – ROOM 350
ROANOKE, VIRGINIA 24011
PHONE: (540) 853–2731
CONTACT: MR. CHARLES ANDERSON
E–MAIL: charles.anderson@roanoke.gov

ENGINEER:
MATTERN & CRAIG, INC.
701 1 ST STREET, S.W.
ROANOKE, VA 24016
PHONE: (540) 345–9342
FAX: (540) 345–7691
CONTACT: TOM AUSTIN, P.E.
E–MAIL: wtaustin@matternandcraig.com

M&C COMMISSION NO. 3536

CITY PLAN NO.: CPXXXXXX

Mattern & Craig, Inc.
CONSULTING ENGINEERS • SURVEYORS
701 FIRST STREET, S.W.
ROANOKE, VIRGINIA 24016
(540) 345–9342
(540) 345–7691 FAX

ENTEROS DESIGN
314 EXCHANGE ALLEY
PETERSBURG, VA 23804
804.861.1200 P
804.861.1253 F

All ideas, designs, arrangements and plans indicated or represented by this drawing are property of ENTEROS DESIGN, PC; created, evolved and developed for the sole use of this project. These ideas, design arrangements and/or plans shall not be used by or disclosed to any person, firm or corporation for any purpose without written permission from ENTEROS DESIGN, PC. Written dimensions on these drawings shall have precedence over scaled dimensions. Contractors shall verify and be responsible for all dimensions and conditions on the job. The Architect must be notified of any variations from the dimensions and conditions shown on these drawings.
c 2015 ENTEROS DESIGN, PC

Mattern & Craig ENGINEERS•SURVEYORS
701 FIRST STREET, S.W.
ROANOKE, VIRGINIA 24016
(540) 345–9342
FAX (540) 345–7691

WILLIAMSON ROAD LIBRARY
3837 Williamson Road, Roanoke, VA 24012

CONSTRUCTION DOCUMENTS

REVISIONS:

SITE DEVELOPMENT COVER SHEET (CITY OF ROANOKE)

PROJ. NO.: 156003 DRAWN BY: ARB
04.13.16

COMMONWEALTH OF VIRGINIA
WM. THOMAS AUSTIN
Lic. No. 030907
4/13/16
PROFESSIONAL ENGINEER

C0.01

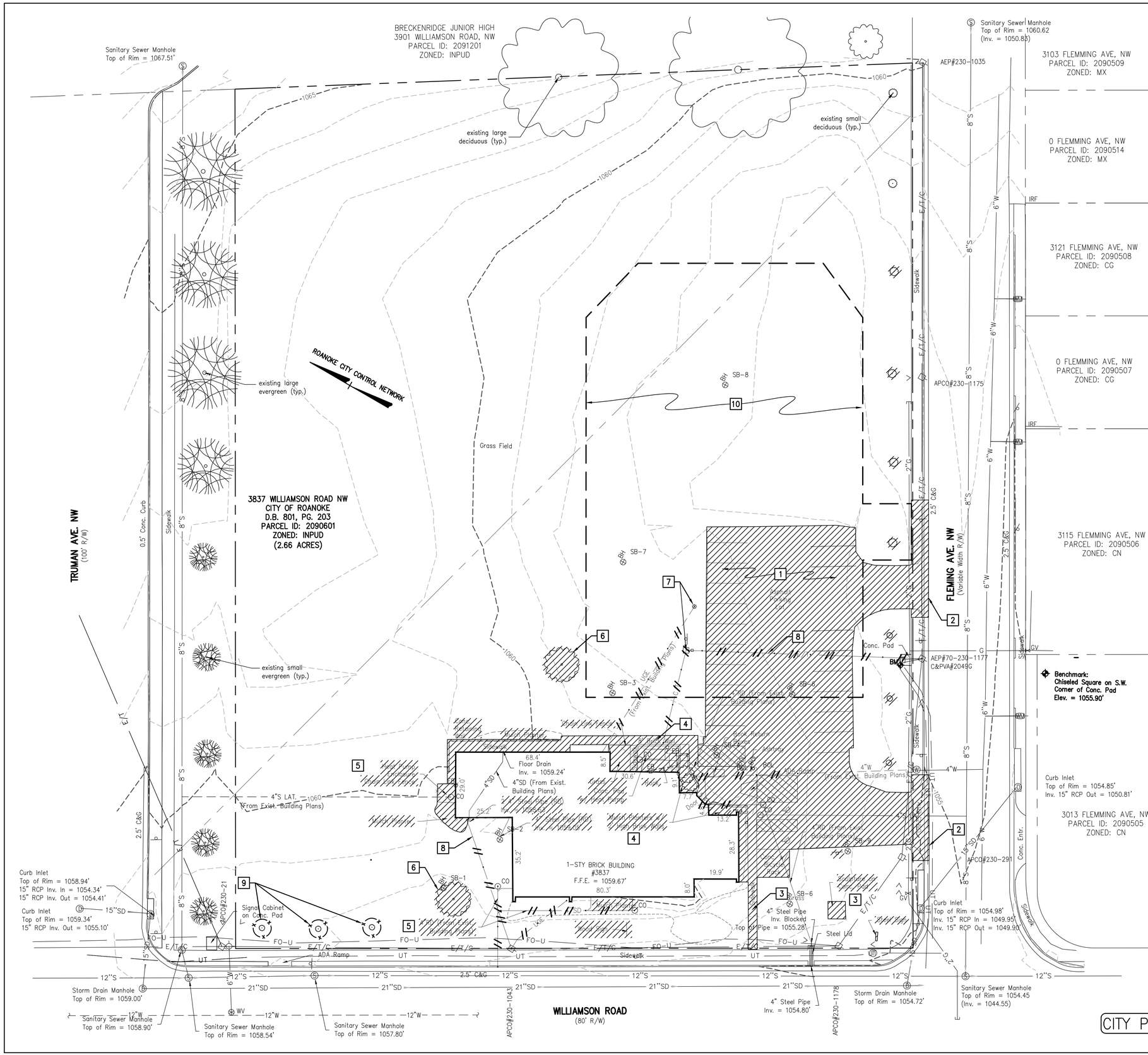

DEMOLITION / REMOVAL KEYNOTES:

1. REMOVE ASPHALT PAVEMENT (SURFACE AND BINDER COURSE, AND AGGREGATE BASE) AND ADJOINING CURB/CURB AND GUTTER WITHIN LIMITS OF DEMOLITION, WHERE SHOWN, OR WHERE IN CONFLICT WITH NEW WORK. SAW-CUT WHERE ADJOINING PAVEMENT AND/OR CURB/CURB & GUTTER IS TO REMAIN.
2. NEATLY REMOVE (SAW CUT WHERE REQUIRED OR REMOVE TO CLOSEST EXPANSION/CONTRACTION JOINT) EXISTING CONCRETE DRIVEWAY APRON AND CONCRETE CURB AND CURB & GUTTER FOR CONSTRUCTION OF NEW ENTRANCE AND/OR CLOSURE OF EXISTING ENTRANCE.
3. REMOVE CONCRETE SIDEWALK, CONCRETE ENTRANCE PLAZA, AND OTHER CONCRETE SLABS/PADS WHERE SHOWN OR WHERE IN CONFLICT WITH NEW WORK.
4. REMOVE EXISTING RAISED PLANTER BED ADJACENT THE BUILDING. REMOVE / DEMOLISH BRICK WALL FORMING THE PLANTER BED AND ASSOCIATED FOOTINGS/BASE AS REQUIRED TO CONSTRUCT NEW IMPROVEMENTS.
5. UTILITIES DENOTED WITH "SLASH" MARKS ARE TO BE REMOVED AND/OR ABANDONED IN-PLACE AS INDICATED. REFER TO SHEET C2.01 AND C3.01 FOR ADDITIONAL INFORMATION REGARDING NEW UTILITY SERVICE LINES THAT MAY CONNECT TO EXISTING SERVICE LINES AND COORDINATE REMOVAL AS REQUIRED.
6. REMOVE TREES, SHRUBS, AND OTHER LANDSCAPE FEATURES WITHIN DEFINED PROJECT WORK LIMITS OR WHERE IN CONFLICT WITH NEW WORK. ALL TREES INDICATED TO REMAIN SHALL BE PROTECTED DURING CONSTRUCTION.
7. EXISTING SITE LIGHT POLES, FOUNDATIONS, AND UNDERGROUND ELECTRICAL SERVICE LINES SHALL BE DEMOLISHED AND REMOVED.
8. EXISTING OVERHEAD UTILITY (MAY INCLUDE POWER, TELEPHONE, CABLE TV, AND FIBER OPTIC) LINES AND POLES TO BE REMOVED BY UTILITY COMPANY.
9. EXISTING SERVICEBERRY (AG) TO REMAIN. PROTECT DURING CONSTRUCTION.
10. LIMITS OF PARKING LOT SOIL REMEDIATION. REFER TO ADDITIONAL INFORMATION ON GRADING SHEET C3.01 AND DETAIL ON SHEET C4.04.

GENERAL NOTES (DEMOLITION AND REMOVAL):

1. EXISTING TOPOGRAPHIC INFORMATION SHOWN HEREON IS TAKEN FROM ACTUAL FIELD SURVEYS PERFORMED BY MATTERN & CRAIG, INC. THIS PARTIAL TOPOGRAPHIC SURVEY FOR THE GRAYBILL STREET NW AND WOODLAWN ROAD NW DRAINAGE IMPROVEMENTS PROJECT FOR THE CITY OF ROANOKE WAS COMPLETED UNDER THE DIRECT AND RESPONSIBLE CHARGE OF TIMOTHY W. CALDWELL, L.S. FROM AN ACTUAL GROUND SURVEY MADE UNDER MY SUPERVISION; THAT THE IMAGERY AND/OR ORIGINAL DATA WAS OBTAINED ON FEBRUARY 4 & 5, 2015; AND THAT THIS PLAT, MAP, OR DIGITAL GEOSPATIAL DATA INCLUDING METADATA MEETS MINIMUM ACCURACY STANDARDS UNLESS OTHERWISE NOTED.
2. WHERE INDICATED OR WHERE IN CONFLICT WITH NEW CONSTRUCTION, EXISTING TOPOGRAPHICAL AND PLANIMETRIC FEATURES (ASPHALT PAVEMENT, CONCRETE PAVEMENT AND SIDEWALK, CURB, CURB AND GUTTER, LIGHT POLES, LANDSCAPING FEATURES AND SITE APPURTENANCES) WITHIN DEMOLITION BOUNDARY ARE TO BE REMOVED.
3. THE LOCATION OF EXISTING UTILITIES, INCLUDING UNDERGROUND UTILITIES, ARE INDICATED ON THE DRAWINGS INSOFAR AS THEIR EXISTENCE AND LOCATION WERE KNOWN AT THE TIME OF THE PREPARATION OF THE DRAWINGS. UNDERGROUND UTILITIES SHOWN HEREON ARE BASED ON THE SURVEYED LOCATION OF FIELD MARKINGS PERFORMED BY OTHERS OR TAKEN FROM "AS-BUILT" DRAWINGS PROVIDED BY OWNER. HOWEVER, NOTHING IN THESE CONTRACT DOCUMENTS SHALL BE CONSTRUED AS A GUARANTEE THAT SUCH UTILITIES ARE IN THE LOCATION INDICATED OR THAT THEY ACTUALLY EXIST, OR THAT OTHER UTILITIES ARE NOT WITHIN THE AREA OF OPERATIONS. THE CONTRACTOR SHALL MAKE ALL NECESSARY INVESTIGATIONS TO DETERMINE THE EXISTENCE AND LOCATIONS OF SUCH UTILITIES. THE CONTRACTOR IS RESPONSIBLE FOR MAINTENANCE AND PROTECTION OF EXISTING UTILITIES AND STRUCTURES DURING THE EXECUTION OF THE WORK.
4. ALL EXISTING UTILITIES ARE TO REMAIN IN PLACE AND ACTIVE UNLESS OTHERWISE NOTED. CONTRACTOR SHALL COORDINATE WITH UTILITY SERVICE COMPANY PRIOR TO PERFORMING DEMOLITION WORK.
5. THE CONTRACTOR SHALL CONTACT "MISS UTILITY" (CALL 811 OR 1-800-552-7001) 48 HOURS PRIOR TO WORKING IN THE VICINITY OF THE EXISTING UTILITIES. CONTRACTOR SHALL REFER TO THE VIRGINIA "UNDERGROUND UTILITY DAMAGE PREVENTION ACT" FOR ADDITIONAL INFORMATION AND REQUIREMENTS.
6. A PERMIT MUST BE OBTAINED FROM THE CITY OF ROANOKE PRIOR TO ANY CONSTRUCTION WITHIN THE RIGHT-OF-WAY.

DEMOLITION LEGEND:

- REMOVE ASPHALT PAVEMENT AND CONC. SIDEWALK [1]
- REMOVE UTILITIES / STORM DRAINAGE ITEMS [5]
- REMOVE SITE FEATURE
- LIMITS OF DEMOLITION AND REMOVAL
- SB-8 SOIL BORING LOCATION

PERIMETER EROSION AND SEDIMENT CONTROL MEASURES AS SHOWN AND SPECIFIED ON SHEET C5.01 SHALL BE INSTALLED PRIOR TO DEMOLITION THAT RESULTS IN LAND DISTURBANCE.

UTILITY OWNERS

ELECTRIC:
APPALACHIAN POWER
40 FRANKLIN ROAD SOUTHWEST
ROANOKE, VIRGINIA 24011
PHONE: 1-800-956-4237

COMMUNICATIONS:
VERIZON
4843 OAKLAND BOULEVARD
ROANOKE, VIRGINIA 24012
PHONE: 1-434-942-8192

GAS:
ROANOKE GAS
519 KIMBLE AVE. N. E.
ROANOKE, VIRGINIA 24030
PHONE: 1-540-938-3800

WATER AND SEWER:
WESTERN VIRGINIA WATER AUTHORITY
3322 HOLLINS RD. N.E.
ROANOKE, VIRGINIA, 24012
PHONE: 1-540-853-5641

ENTEROS DESIGN
314 EXCHANGE ALLEY
PETERSBURG, VA 23804
804.861.1200 P
804.861.1253 F

All ideas, designs, arrangements and plans indicated or represented by this drawing are property of ENTEROS DESIGN, PC; created, evolved and developed for the sole use of this project. These ideas, design arrangements and/or plans shall not be used by or disclosed to any person, firm or corporation for any purpose without written permission from ENTEROS DESIGN, PC. Written dimensions on these drawings shall have precedence over scaled dimensions. Contractors shall verify and be responsible for all dimensions and conditions on the job. The Architect must be notified of any variations from the dimensions and conditions shown on these drawings. c 2015 ENTEROS DESIGN, PC

Mattern & Craig
ENGINEERS•SURVEYORS
701 FIRST STREET, S.W.
ROANOKE, VIRGINIA 24016
(540) 345-9342
FAX (540) 345-7691

WILLIAMSON ROAD LIBRARY

3837 Williamson Road, Roanoke, VA 24012

CONSTRUCTION DOCUMENTS

REVISIONS:

EXISTING CONDITIONS / DEMOLITION & REMOVAL PLAN

PROJ. NO.: 156003 DRAWN BY: ARB
04.13.16

COMMONWEALTH OF VIRGINIA
WM. THOMAS AUSTIN
Lic. No. 030907
4/13/16
PROFESSIONAL ENGINEER

C1.01

GENERAL NOTES:

1. UNLESS OTHERWISE NOTED, ALL DIMENSIONS (LINEAR AND RADIAL) ARE TO FACE OF CURB (FC) OR EDGE OF PAVEMENT (EP).

2. UNLESS OTHERWISE NOTED HEREON, ALL PARKING LOT AREA AND TRAVELWAYS SHALL BE PAVED WITH REGULAR DUTY PAVEMENT. REFER TO LEGEND AND SITE PLAN KEYNOTE FOR ADDITIONAL INFORMATION.

3. IN ACCORDANCE WITH CITY OF ROANOKE ZONING ORDINANCE SECTION 36.2–654(e) AND TABLE 654–2, ALL PARKING SPACES SHOWN SHALL BE 9–FEET WIDE X 18–FEET DEEP (UNLESS OTHERWISE INDICATE AND WHERE PERMITTED BY CODE) AND SHALL BE DELINEATED WITH A 4–INCH WIDE PAINTED WHITE STRIPE AS SHOWN HEREON.

4. ALL SIGNS (OTHER THAN TRAFFIC CONTROL SIGNS) SHALL BE SEPARATELY REVIEWED AND APPROVED AND A ZONING PERMIT ISSUED PRIOR TO INSTALLATION. REFER TO CITY OF ROANOKE CODE SECTION 36.2–664 – ZONING PERMITS FOR SIGNS FOR ADDITIONAL INFORMATION.

5. IN ACCORDANCE WITH CITY OF ROANOKE CODE SECTION SEC. 36.2–610 – UTILITIES – ALL UTILITY SERVICE LATERALS OR SERVICE LINES ASSOCIATED WITH A BASIC OR COMPREHENSIVE DEVELOPMENT PLAN SHALL BE LOCATED UNDERGROUND; HOWEVER, UTILITY SERVICE LATERALS OR SERVICE LINES MAY BE LOCATED ABOVEGROUND TO THE POINT OF CONNECTION WHEN ROUTED DIRECTLY TO THE REAR OF THE STRUCTURE BY WAY OF AN ALLEY OR UTILITY EASEMENT WHERE THERE ARE EXISTING OVERHEAD DISTRIBUTION LINES WHERE THERE ARE EXISTING OVERHEAD DISTRIBUTION LINES. ALL TRANSFORMERS REQUIRED TO SERVE A DEVELOPMENT AND LOCATED ON THE PROPERTY ASSOCIATED WITH A BASIC OR COMPREHENSIVE DEVELOPMENT PLAN MAY BE LOCATED ABOVEGROUND BUT SHALL BE SURFACE–MOUNTED ON PADS ON THE GROUND.

6. ALL PARKING AND LOADING AREAS ARE BORDERED BY CONCRETE CURB AND/OR CURB & GUTTER PER CITY CODE SECTION 36.2–654–(B)–(3).

7. NO OUTDOOR STORAGE IS PROPOSED UNDER THIS DEVELOPMENT.

8. NO TRASH COLLECTION DUMPSTER IS PROPOSED UNDER THIS DEVELOPMENT. SOLID WASTE DISPOSAL TO BE PROVIDED BY CITY OF ROANOKE CURB–SIDE COLLECTION.

9. ALL GROUND LEVEL AND ROOF–MOUNTED MECHANICAL EQUIPMENT SHALL BE SCREENED IN ACCORDANCE WITH CITY CODE SECTIONS 36.2–647 AND 649. THE LOCATION OF ANY GROUND LEVEL EQUIPMENT IS SHOWN HEREON AND SCREENING IS SHOWN ON THE LANDSCAPE PLAN. THE LOCATION OF ANY ROOF–MOUNTED EQUIPMENT IS SHOWN ON THE ARCHITECTURAL PLANS AND ELEVATIONS AND SCREENING IS SHOWN THEREON.

FIRE DATA / KEYNOTES:

FD–1: USE GROUP: A–3 (ASSEMBLY / LIBRARY)

FD–2: CONSTRUCTION TYPE: II–B (UNPROTECTED NON–COMBUSTIBLE)

FD–3: USE GROUP AND CONSTRUCTION TYPE PROVIDED BY PROJECT ARCHITECT IN ACCORDANCE WITH VIRGINIA UNIFORM STATEWIDE BUILDING CODE AND INTERNATIONAL BUILDING CODE.

FD–4: FIRE FLOW REQUIRED (CODE): 2,000 GPM.

FD–5: FIRE FLOW AVAILABLE:

- AT F.H.# 12873 = 1,967 GPM
- AT F.H.# 11603 = 1,879 GPM
- FIRE FLOW COMPUTED AT 20 PSI RESIDUAL SYSTEM PRESSURE.
- FIRE FLOW AVAILABLE IS BASED ON FLOW TEST INFORMATION PROVIDED BY THE WESTERN VIRGINIA WATER AUTHORITY.

FD–6: NO NEW FIRE HYDRANT IS PROPOSED.

F.H.# 12873 (PUBLIC) IS LOCATED AT THE NORTHWEST CORNER OF THE SITE AND IS WITHIN 300–FEET OF THE MOST REMOTE PART OF THE BUILDING.

FD–7: NO FIRE SPRINKLER SYSTEM IS PROPOSED.

FD–8: KNOX BOX (3200 SERIES OR ABOVE) TO BE WALL–MOUNTED WHERE SHOWN.

UTILITY GENERAL NOTES:

1. CONTRACTOR TO CONFIRM LOCATION & INVERT OF EXISTING UTILITY LINES AND NEW SERVICE LINE PRIOR TO INSTALLATION ON ANY NEW UTILITY LINES. REFER TO BUILDING PLANS FOR EXACT LOCATION AND INVERT OF SERVICE LINES/LATERALS EXITING THE BUILDING. CONTRACTOR SHALL NOTIFY OWNER AND ENGINEER IMMEDIATELY UPON DISCOVERY OF DISCREPANCIES OR CONFLICTS.

2. CONTRACTOR TO CONTACT THE WESTERN VIRGINIA WATER AUTHORITY (WVWA) PRIOR TO EXTENDING WATER & SEWER SERVICE LINES TO COORDINATE THE CONNECTION TO THE EXISTING WATER AND SEWER MAINS AND TO ARRANGE FOR ALL REQUIRED PRE–CONSTRUCTION CONFERENCES AND INSPECTIONS.

3. CLEAN–OUTS IN PAVEMENT OR SIDEWALK SHALL BE SET IN TRAFFIC BEARING CAST IRON VALVE BOX OR APPROVED CLEAN–OUT BOX WITH TOP SET FLUSH WITH FINISHED PAVED GRADE (CAPITAL FOUNDRY MODEL #VB–9*S, OR APPROVED EQUAL).

4. UNLESS OTHERWISE NOTED, SANITARY SEWER LATERALS SHALL BE INSTALLED AT 1/4" PER 1' SLOPE (MIN.) FROM POINT OF CONNECTION TO BUILDING. CONTRACTOR TO CONFIRM INVERT OF EXISTING MAIN OR LATERAL PRIOR TO INSTALLATION OF LATERAL. REFER TO INTERNATIONAL PLUMBING CODE (IPC) FOR OTHER REQUIREMENTS.

5. WHERE APPLICABLE ALL WATER AND SEWER WORK (BOTH PUBLIC AND PRIVATE) SHALL CONFORM TO THE WESTERN VIRGINIA WATER AUTHORITY STANDARDS, LATEST EDITION. SEWER LATERALS AND DOMESTIC WATER SERVICE LINES SHALL CONFORM TO INTERNATIONAL PLUMBING CODE, LATEST ADOPTED EDITION.

6. CONTRACTOR SHALL ENSURE THAT EXISTING WATER AND SEWER SERVICES LINES WHICH RUN THROUGH OR ADJOIN THE SITE REMAIN IN SERVICE AT ALL TIMES UNLESS A SHUTDOWN IS APPROVED BY THE WESTERN VIRGINIA WATER AUTHORITY.

7. IN ACCORDANCE WITH THE VIRGINIA STATEWIDE FIRE PREVENTION CODE SECTION 3312.1, AN APPROVED WATER SUPPLY FOR FIRE PROTECTION, EITHER TEMPORARY OR PERMANENT, SHALL BE MADE AVAILABLE AS SOON AS COMBUSTIBLE MATERIAL ARRIVES ON THE SITE.

SIGN LEGEND:

(SEE SHEET C4.01 FOR DETAILS)

S–1 RESERVED PARKING HANDICAPPED VAN ACCESSIBLE

S–2 RESERVED PARKING PATRONS WITH SMALL CHILDREN OR STROLLERS

S–3 NO PARKING PATRON DROP–OFF AREA

BID ALTERNATE SCHEDULE:

A–1 BID ALTERNATE NO. 1 – DELETE MAIN BUILDING SIGN. REFER TO SHEET A11.03 FOR DIMENSIONS AND LAYOUT OF "BUILDING SIGN." THIS DEDUCTIVE BID ALTERNATE DOES NOT AFFECT ADJOINING CONCRETE SIDEWALK TO REMAIN OR SIDEWALK OUTSIDE THE LIMITS OF THIS BID ALTERNATE OR ANY UTILITIES SHOWN ON THIS PLAN.

A–2 BID ALTERNATE NO. 2 – DELETE ART WALK. REFER TO SHEET A11.03 FOR DIMENSIONS AND LAYOUT OF "ART WALK." THIS DEDUCTIVE BID ALTERNATE DOES NOT AFFECT ADJOINING CONCRETE SIDEWALK TO REMAIN OR SIDEWALK OUTSIDE THE LIMITS OF THIS BID ALTERNATE OR ANY UTILITIES SHOWN ON THIS PLAN.

A–3 BID ALTERNATE NO. 3 – DELETE READING GARDEN. REFER TO SHEET A11.02 FOR DIMENSIONS AND LAYOUT READING GARDEN WHICH SHOWS THE SPECIFIC COMPONENTS TO BE REMOVED WITH THIS BID ALTERNATE. BID ALTERNATE INCLUDES DEDUCT OF CONCRETE SIDEWALK WITHIN LIMITS SHOWN.

A–6 BID ALTERNATE NO. 6 – REDUCE SIZE OF MEETING ROOM IN ACCORDANCE WITH THE PLAN, DETAILS, AND SECTIONS SHOWN ON SHEET A11.01. THIS DEDUCTIVE BID ALTERNATE DOES NOT AFFECT SIDEWALK OR UTILITIES SHOWN ON THIS PLAN.

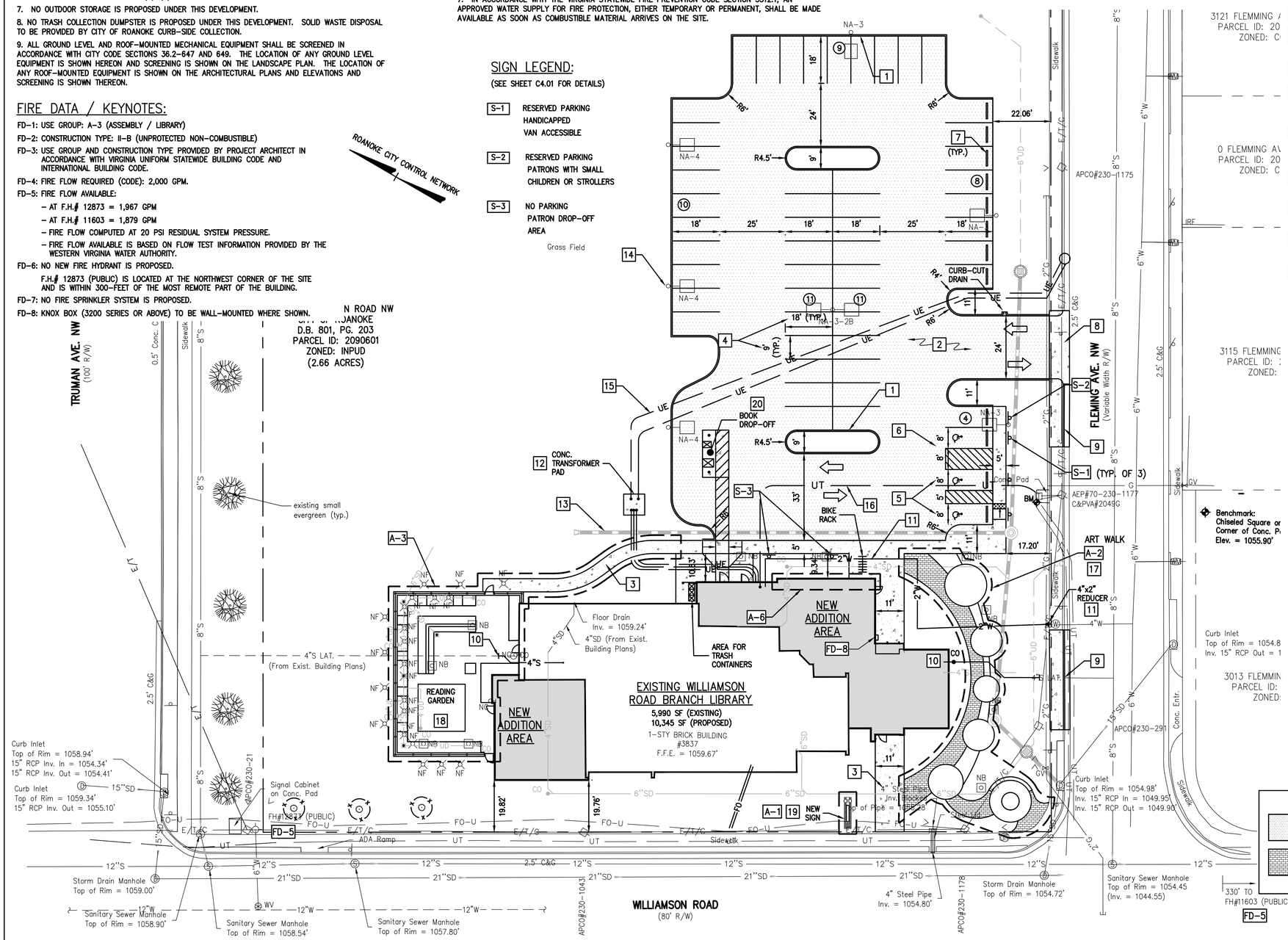

KEYNOTES:

1. NEW CONCRETE CURB – VDOT STANDARD CG–2 (TYPICAL). REFER TO SHEET C4.01 FOR DETAIL.
2. REGULAR DUTY ASPHALT PAVEMENT. REFER TO SHEET C4.01 FOR DETAIL.
3. NEW CONCRETE SIDEWALK. REFER TO SHEET C4.01 FOR DETAIL.
4. STANDARD PARKING SPACE (TYPICAL 9' WIDE X 18' DEEP, OR AS NOTED). SEE PARKING TABULATIONS ON THIS SHEET FOR ADDITIONAL INFORMATION.
5. STANDARD ACCESSIBLE (HANDICAPPED) PARKING SPACE WITH CONCRETE RAMP, DETECTABLE WARNING, AND SIGN. REFER TO SHEET C4.01 FOR DETAIL.
6. VAN ACCESSIBLE (HANDICAPPED) PARKING SPACE WITH CONCRETE RAMP, DETECTABLE WARNING, AND SIGN. REFER TO SHEET C4.01 FOR DETAIL.
7. CONCRETE (PRE–CAST) WHEEL STOPS. REFER TO SHEET C4.01 FOR DETAIL.
8. NEW COMMERCIAL ENTRANCE (CONCRETE) IN ACCORDANCE WITH VDOT STD. CG–9D.
9. NEW CONCRETE CURB & GUTTER (VDOT STANDARD CG–6) AND CONCRETE SIDEWALK TO CLOSE EXISTING ENTRANCE.
10. NEW SEWER SERVICE LINE (LATERAL) TO CONNECT TO EXISTING LINE. SANITARY SEWER SERVICE LINE / LATERAL (SIZE INDICATED) WITH CLEAN–OUTS PLACED AS SHOWN. PIPE MATERIAL SHALL CONFORM TO INTERNATIONAL PLUMBING CODE (IPC) REQUIREMENTS FOR UNDERGROUND BUILDING DRAINAGE AND VENT PIPE.
11. NEW WATER SERVICE LINE, SIZE AS INDICATED. APPURTENANCES (VALVE, BENDS, TEES, ETC.) ARE AS INDICATED HEREON. ALL WATERLINE CONNECTIONS SHALL CONFORM TO "WESTERN VIRGINIA REGIONAL DESIGN AND CONSTRUCTION STANDARDS". WHERE WATER SERVICE RUNS UNDER BIORETENTION AREA, INSTALL LINE IN A 4" PVC SLEEVE.
12. TRANSFORMER PAD (BY SITE CONTRACTOR) IN ACCORDANCE WITH DETAILS AND SPECIFICATIONS PROVIDED BY A.E.P.
13. STORM DRAIN LINES AND STRUCTURES SHOWN HEREON FOR UTILITY COORDINATION INFORMATION ONLY. REFER TO SHEET C–6 FOR DETAILED STORM DRAINAGE AND GRADING PLAN AND ADDITIONAL INFORMATION.
14. SITE LIGHT FIXTURE (TYPICAL). REFER TO SITE LIGHTING LEGEND ON THIS SHEET FOR ADDITIONAL INFORMATION. REFER TO SHEET E6.01 FOR SITE LIGHTING PLAN.
15. ELECTRICAL CONDUITS FOR PRIMARY AND SECONDARY POWER OR BRANCH CIRCUITS SHOWN FOR COORDINATION PURPOSES ONLY. SITE UTILITY CONTRACTOR SHALL COORDINATE WITH ELECTRICAL CONTRACTOR AND/OR POWER COMPANY DURING INSTALLATION OF CONDUITS / LINES.
16. TELEPHONE AND/OR COMMUNICATIONS CONDUITS SHOWN FOR COORDINATION PURPOSES ONLY. SITE UTILITY CONTRACTOR SHALL COORDINATE WITH ELECTRICAL CONTRACTOR AND/OR TELEPHONE COMPANY DURING INSTALLATION OF CONDUITS / LINES.
17. ART WALK FEATURE – REFER TO SHEET A11.03 FOR ENLARGED PLAN AND ADDITIONAL INFORMATION. ART WALK IS IDENTIFIED AS BID ALTERNATE NO. 3. REFER TO BID ALTERNATE SCHEDULE ON THIS SHEET AND IN THE CONTRACT DOCUMENTS FOR ADDITIONAL INFORMATION.
18. READING GARDEN – REFER TO SHEET A11.02 FOR ENLARGED PLAN AND ADDITIONAL INFORMATION. READING GARDEN IS IDENTIFIED AS BID ALTERNATE NO. 2. REFER TO BID ALTERNATE SCHEDULE ON THIS SHEET AND IN THE CONTRACT DOCUMENTS FOR ADDITIONAL INFORMATION.
19. LIBRARY SIGN – REFER TO SHEET A11.03 FOR ENLARGED PLAN AND ADDITIONAL INFORMATION. LIBRARY SIGN IS IDENTIFIED AS BID ALTERNATE NO. 4. REFER TO BID ALTERNATE SCHEDULE ON THIS SHEET AND IN THE CONTRACT DOCUMENTS FOR ADDITIONAL INFORMATION.
20. BOOK DROP–OFF – CONCRETE PAD AND STEEL PIPE BOLLARDS IN ACCORDANCE WITH DETAILS ON SHEET C4.01 TO BE INSTALLED BY CONTRACTOR. BOOK DROP CONTAINERS TO BE PROVIDED AND INSTALLED BY CITY.

SITE TABULATIONS:

1. TAX PARCEL NUMBER: 2090601
2. SITE ADDRESS:
   3837 WILLIAMSON ROAD, NW
   ROANOKE, VA 24012
3. PROPERTY OWNER:
   CITY OF ROANOKE, VIRGINIA
   P.O. BOX 1451
   ROANOKE, VA 24007
   DEED BOOK 801 / PAGE 203
4. SITE AREA = 2.6610 ACRES
5. CURRENT ZONING: INPUD(c) / ORDINANCE NUMBER: 40395–111615
   PROFFERED CONDITIONS: 1. "THE PROPERTY WILL BE DEVELOPED IN SUBSTANTIAL CONFORMITY WITH THE "DEVELOPMENT PLAN" PREPARED BY MATTERN & CRAIG, INC. AND THE "BUILDING ELEVATIONS" PREPARED BY ENTEROS DESIGN, PC, BOTH DATED SEPTEMBER 28, 2015, A COPY OF WHICH IS ATTACHED TO THIS APPLICATION AS EXHIBIT NO. 1 AND EXHIBIT NO. 2, SUBJECT TO ANY CHANGES THAT MAY BE REQUIRED BY THE CITY DURING COMPREHENSIVE DEVELOPMENT PLAN REVIEW."
6. OVERLAY ZONING DISTRICTS: NONE
7. LAND USE:
   - CURRENT USE: PUBLIC LIBRARY
   - PROPOSED USE: PUBLIC LIBRARY
8. BUILDING AREA:
   - EXISTING = 5,990 SF (GROSS)
   - PROPOSED = 10,345 SF (GROSS)
9. SITE DEVELOPMENT STANDARDS (CODE SEC. 36.2–328):
   - MINIMUM SIZE OF DISTRICT = NONE
   - MINIMUM LOT AREA = 1,800 S.F.
   - IMPERVIOUS SURFACE RATIO MAXIMUM = 80–PERCENT OF LOT AREA
   - MINIMUM TREE CANOPY = 10–PERCENT OF LOT AREA
   - OTHERS AS SET BY "PROFFERED DEVELOPMENT PLAN"
10. TREE CANOPY: SEE LANDSCAPE PLAN FOR TABULATIONS.
11. ADJOINING LAND USE & ZONING: AS NOTED ON PLAN SHEET.

PARKING TABULATIONS:

PARKING SHOWN ON INPUD DEVELOPMENT PLAN = 54 SPACES

PARKING PROVIDED:

- 50 STANDARD PARKING SPACES
- 3 ACCESSIBLE PARKING SPACES

LEGEND:

- REGULAR DUTY PAVEMENT (SEE DETAIL ON SHEET C4.01) 2
- CONCRETE SIDEWALK/PAD (SEE DETAIL ON SHEET C4.01) 3
- BRICK PAVERS
- NUMBER OF PARKING SPACES PER ROW
- NA–4
- NB
- SITE LIGHT FIXTURE (TYP.) 14

ENTEROS DESIGN
314 EXCHANGE ALLEY
PETERSBURG, VA 23804
804.861.1200 P
804.861.1253 F

All ideas, designs, arrangements and plans indicated or represented by this drawing are property of ENTEROS DESIGN, PC; created, evolved and developed for the sole use of this project. These ideas, design arrangements and/or plans shall not be used by or disclosed to any person, firm or corporation for any purpose without written permission from ENTEROS DESIGN, PC. Written dimensions on these drawings shall have precedence over scaled dimensions. Contractors shall verify and be responsible for all dimensions and conditions on the job. The Architect must be notified of any variations from the dimensions and conditions shown on these drawings. c 2015 ENTEROS DESIGN, PC

Mattern & Craig ENGINEERS•SURVEYORS
701 FIRST STREET, S.W.
ROANOKE, VIRGINIA 24016
(540) 345–9342
FAX (540) 345–7691

WILLIAMSON ROAD LIBRARY

3837 Williamson Road, Roanoke, VA 24012

CONSTRUCTION DOCUMENTS

REVISIONS:

SITE & UTILITY PLAN

PROJ. NO.: 156003 DRAWN BY: ARB
04.13.16

COMMONWEALTH OF VIRGINIA
WM. THOMAS AUSTIN
Lic. No. 030907
4/13/16
PROFESSIONAL ENGINEER

C2.01

I:\3536 - Williamson Road Library\Dwg\3536_SHEETS.dwg, 4/13/2016 2:20:48 PM, arb

BMP SCHEDULE:

WATER QUALITY MEASURES (BMP'S) ARE PROVIDED AT THE LOCATIONS SHOWN ON THE PLAN. BELOW IS A TABULATION OF EACH BMP AND A SUMMARY OF THE POLLUTANT REMOVAL PROVIDED BY THE PROPOSED BMP'S. REFER TO DETAILS AND TYPICAL SECTIONS ON SHEET C4.03 FOR ADDITIONAL INFORMATION.

SITE AREA = 2.66 ACRES

EXISTING CONDITIONS:
- MANAGED TURF = 2.25 ACRES
- IMPERVIOUS = 0.41 ACRES

PROPOSED CONDITIONS:
- FOREST / OPEN SPACE = 0.04 ACRES (BIO-RETENTION AREAS)
- MANAGED TURF = 1.75 ACRES
- IMPERVIOUS = 0.87 ACRES

SOIL HYDRAULIC GROUP = 'C'

TOTAL LOAD REDUCTION REQUIRED (VRMM) = 1.15 LBS/YEAR

TOTAL LOAD REDUCTION PROVIDED (VRMM) = 1.19 LBS/YEAR

BMP NO. 1:
- BIO-RETENTION – LEVEL 1
- DEQ STORMWATER / DESIGN SPECIFICATION No. 9 – BIO-RETENTION
- DRAINAGE AREA = 1.57 ACRES
  - FOREST / OPEN SPACE = 0.03 ACRES
  - MANAGED TURF = 1.14 ACRES
  - IMPERVIOUS = 0.40 ACRES
- TOTAL LOAD REDUCTION PROVIDED (VRMM) = 0.79 LBS/YEAR

BMP NO. 2:
- GRASS CHANNEL (WITH CHECK DAMS)
- VIRGINIA DEQ STORMWATER DESIGN SPECIFICATION No. 3
- DRAINAGE AREA = 0.17 ACRES
  - MANAGED TURF = 0.05 ACRES
  - IMPERVIOUS = 0.13 ACRES
- TOTAL LOAD REDUCTION PROVIDED (VRMM) = 0.08 LBS/YEAR

BMP NO. 3:
- BIO-RETENTION – LEVEL 1
- DEQ STORMWATER DESIGN SPECIFICATION No. 9 – BIO-RETENTION
- DRAINAGE AREA = 0.35 ACRES
  - FOREST / OPEN SPACE = 0.01 ACRES
  - MANAGED TURF = 0.10 ACRES (1)
  - IMPERVIOUS = 0.24 ACRES (1)
- (1) INCLUDES AREA FROM BMP NO. 2
- TOTAL LOAD REDUCTION PROVIDED (VRMM) = 0.27 LBS/YEAR

BMP NO. 4:
- GRASS CHANNEL (WITH CHECK DAMS)
- VIRGINIA DEQ STORMWATER DESIGN SPECIFICATION No. 3
- DRAINAGE AREA = 0.29 ACRES
  - MANAGED TURF = 0.24 ACRES
  - IMPERVIOUS = 0.05 ACRES
- TOTAL LOAD REDUCTION PROVIDED (VRMM) = 0.05 LBS/YEAR

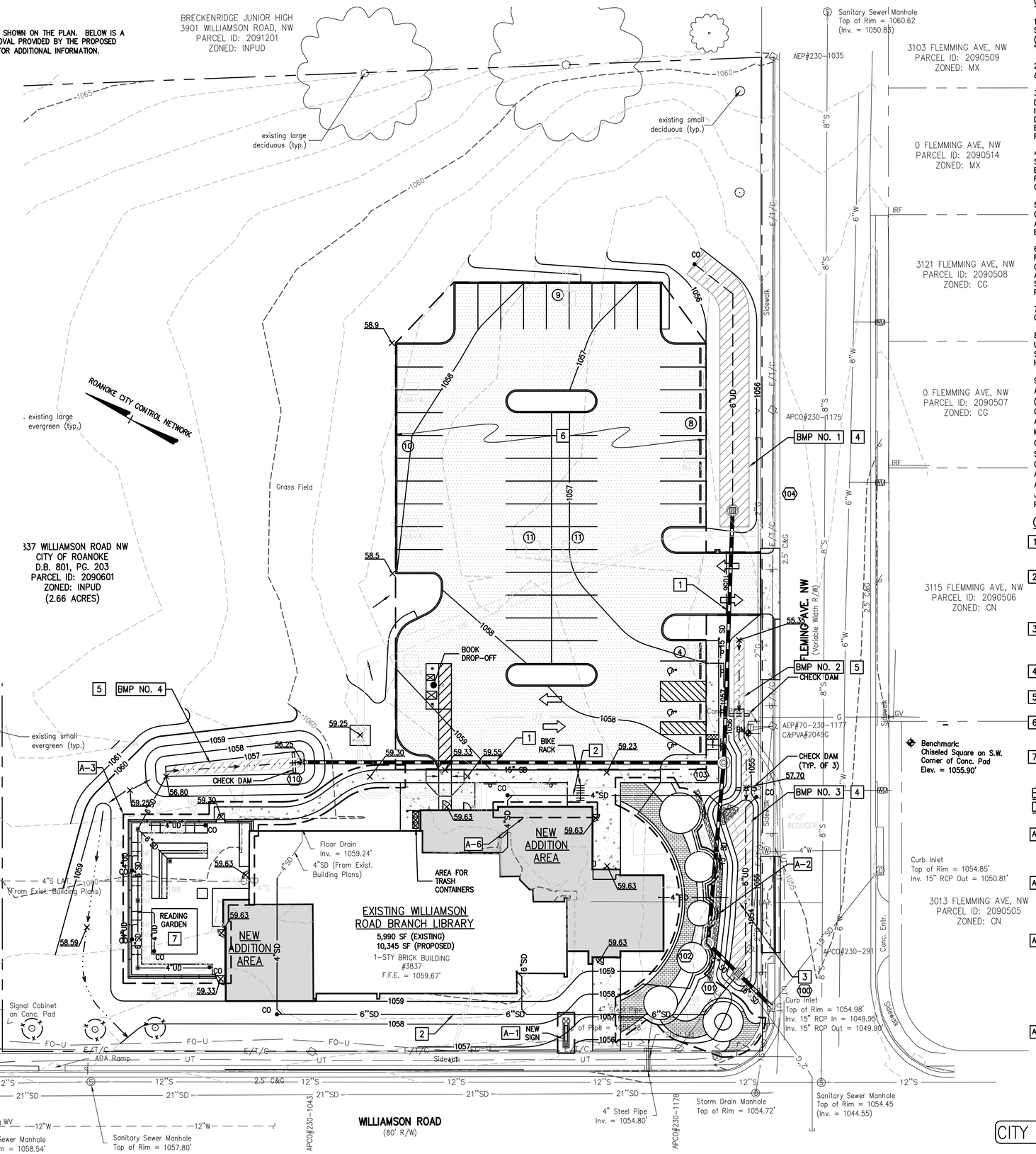

GRADING & STORM DRAINAGE GENERAL NOTES:

1. HORIZONTAL (NAD 83/93) AND VERTICAL (NAVD88) CONTROL WAS ESTABLISHED BY STATIC GPS SURVEY COMPLETED ON JULY 21, 2015 BY MATTERN AND CRAIG, INC. (TIMOTHY W. CALDWELL, L.S.) USING ROANOKE CITY CONTROL NETWORK MONUMENT "PRESTON". BENCHMARK AND CONTROL POINTS SHOWN ON PLANS.

2. TOPOGRAPHY SHOWN HEREON IS BASED ON A FIELD SURVEY PERFORMED BY MATTERN & CRAIG, P.C. – DATED JULY 21, 2015. CONTOUR INTERVAL SHOWN IS ONE (1) FOOT.

3. THE PROJECT PROPERTY IS LOCATED IN FEMA DEFINED ZONE "UNSHADED X" (AREAS DETERMINED TO BE OUTSIDE THE 0.2% ANNUAL CHANCE FLOODPLAIN) AS SHOWN ON FLOOD INSURANCE RATE MAP PANEL 51161C0162G, EFFECTIVE DATE SEPTEMBER 28, 2007. THIS DETERMINATION IS BASED ON SAID MAP AND HAS NOT BEEN VERIFIED BY ACTUAL FIELD ELEVATIONS. THE PROJECT PROPERTY DOES NOT LIE WITHIN THE LIMITS OF A SPECIAL FLOOD HAZARD AREA AS DESIGNATED BY FEMA.

4. UNLESS DIRECTED OTHERWISE OR NOTED ON THE PLANS, THE BUILDING PAD SUBGRADE SHALL GRADED TO AN ELEVATION 8-INCHES BELOW THE PUBLISHED FINISHED FLOOR OR BASEMENT FLOOR ELEVATION. REFER TO ARCHITECTURAL AND STRUCTURAL FOUNDATION PLANS FOR ADDITIONAL INFORMATION REGARDING SLAB THICKNESS, STONE SUB-BASE, AND OTHER FOOTING EXCAVATIONS.

5. WHERE SHOWN CLEAN-OUTS FOR ROOF DRAIN SYSTEM SHALL BE SET IN 6" DIAMETER CAST IRON VALVE BOX (ITEM #NPN-CW-18 BY CAPITOL FOUNDRY OF VA, INC., OR APPROVED EQUAL) WITH TOP SET FLUSH WITH FINISHED PAVED GRADE OR GRASS SURFACE ELEVATION.

6. UPON COMPLETION OF THE STORM DRAINAGE SYSTEM, THE CONTRACTOR SHALL FURNISH TO THE OWNER WITH A FIELD SURVEYED FINAL CORRECT SET OF AS-BUILT PLANS OF THE NEWLY CONSTRUCTED STORM DRAIN AND/OR STORMWATER MANAGEMENT FACILITIES. AS-BUILT PLANS SHALL BE PROVIDED IN THE STATE PLANE VIRGINIA SOUTH COORDINATE SYSTEM, NAD 1983, FIPS 4502 FEET, US SURVEY FEET, DATUM NA 83, IN THE FORM OF 1 PAPER COPY AND 1 DIGITAL AUTOCAD FILE.

7. UNLESS OTHERWISE NOTED, NEW AND EXISTING STORM DRAINAGE PIPES AND OPEN CHANNELS ON THE PROJECT SITE ARE PRIVATELY OWNED, OPERATED, AND MAINTAINED.

8. CONTRACTOR SHALL COMPLY WITH ALL APPLICABLE PROVISIONS OF THE "UNDERGROUND UTILITY DAMAGE PREVENTION ACT" AND SHALL CONTACT THE VIRGINIA UTILITY PROTECTION SERVICE (MISS UTILITY OF VIRGINIA) BY CALLING 811 OR 1-800-552-7001 AT LEAST 72 HOURS PRIOR TO PERFORMING EXCAVATIONS.

9. THE WORK OF THE PROJECT INVOLVES LAND DISTURBANCES OF MORE THAN ONE (1) ACRE. THE CITY OF ROANOKE AND VIRGINIA DEPARTMENT OF ENVIRONMENTAL QUALITY (DEQ) SHALL REQUIRE THE WORK TO BE PERMITTED IN ACCORDANCE WITH THE PROVISIONS OF THE "GENERAL PERMIT FOR DISCHARGES OF STORMWATER FROM CONSTRUCTION ACTIVITIES – AUTHORIZATION TO DISCHARGE UNDER THE VIRGINIA STORMWATER MANAGEMENT PROGRAM (VSMP)" AND THE VIRGINIA STORMWATER MANAGEMENT ACT. THE OWNER/DEVELOPER HAS APPLIED FOR COVERAGE UNDER THE "VSMP GENERAL PERMIT FOR STORMWATER DISCHARGES FROM CONSTRUCTION ACTIVITIES (VAR10)." EVIDENCE OF COVERAGE UNDER THE "VSMP GENERAL PERMIT" MUST BE PROVIDED PRIOR TO BEGINNING ANY LAND DISTURBANCE ON THE PROPERTY. A COPY OF THE "VSMP GENERAL PERMIT" AND THE "STORMWATER POLLUTION PREVENTION PLAN (SWPPP)" MUST BE KEPT ON THE JOB SITE AT ALL TIMES AND THE "VSMP GENERAL PERMIT COVERAGE LETTER" MUST BE POSTED AT THE PROJECT SITE.

GRADING / STORM DRAINAGE KEYNOTES:

1. NEW STORM DRAIN SYSTEM. REFER TO STORM DRAINAGE PROFILES SHOWN ON SHEET C4.02 FOR STRUCTURE AND STORM DRAINAGE LINE INFORMATION AND STORM DRAINAGE DETAILS.
2. STORM DRAIN ROOF LEADER (RD) AND COLLECTION LINE SHALL BE PVC SDR-35. SITE CONTRACTOR TO INSTALL ROOF LEADER COLLECTION LINES FROM STORM DRAIN MAIN/MANHOLE TO POINT SHOWN OR TO WITHIN 5-FEET OF BUILDING. BUILDING CONTRACTOR SHALL CONNECT DOWN SPOUT TO STORM DRAIN ROOF LEADER. REFER TO ARCHITECTURAL PLAN FOR LOCATION OF DOWNSPOUTS.
3. NEW SANITARY SEWER LINE AND WATER LINE SHOWN FOR INFORMATION AND COORDINATION PURPOSES ONLY. CONTRACTOR SHALL CONFIRM LOCATION & INVERT OF EXISTING AND NEW UTILITY LINES PRIOR TO INSTALLATION OF STORM DRAINAGE. REFER TO SHEET C2.01 FOR ADDITIONAL INFORMATION.
4. NEW BIORETENTION BASIN AND FILTER. REFER TO SHEET C4.03 FOR ENLARGED PLAN AND DETAILS AND SECTIONS.
5. GRASS-LINED SWALE / CHANNEL WITH CHECK DAM. REFER TO CROSS SECTION AND SCHEDULE ON SHEET C4.04.
6. AREA OF PARKING LOT TO BE PARTIALLY UNDER-CUT AND BACKFILLED IN ACCORDANCE WITH DETAIL SHOWN ON SHEET C4.04. LIMITS SHOW ON THIS PLAN AND SHEET C1.01.
7. REFER TO ARCHITECTURAL PLAN SHEET A11.02 FOR ENLARGED PLAN SHOWING GRADES AND STORM DRAINAGE WITHIN READING GARDEN.

BID ALTERNATE SCHEDULE / GRADING & STORM DRAINAGE PLAN:

A-1 BID ALTERNATE NO. 1 – DELETE MAIN BUILDING SIGN. REFER TO SHEET A11.03 FOR DIMENSIONS AND LAYOUT OF "BUILDING SIGN." IF THIS DEDUCTIVE BID ALTERNATE IS ACCEPTED AND THE SIGN IS DELETED THERE WILL BE NO CHANGE TO THE GRADING AND STROM DRAINAGE IN THE VICINITY OF THE SIGN.

A-2 BID ALTERNATE NO. 2 – DELETE ART WALK. REFER TO SHEET A11.03 FOR DIMENSIONS AND LAYOUT OF "ART WALK." IF THIS DEDUCTIVE BID ALTERNATE IS ACCEPTED AND THE ART WALK IS DELETED CONTRACTOR SHALL GRADE THE AREA WITH A UNIFORM CROSS SLOPE FROM THE SHOWN 1059 TO THE 1058 CONTOUR. NO CHANGES ARE REQUIRED WITH THE STORM DRAINAGE SYSTEM.

A-3 BID ALTERNATE NO. 3 – DELETE READING GARDEN. REFER TO SHEET A11.02 FOR DIMENSIONS AND LAYOUT OF READING GARDEN WHICH SHOWS THE SPECIFIC COMPONENTS TO BE REMOVED WITH THIS BID ALTERNATE. IF THIS DEDUCTIVE BID ALTERNATE IS ACCEPTED AND THE READING GARDEN IS DELETED THE AREA SHALL BE GRADED TO UNIFORMLY SLOPE FROM THE NORTHERN FACE OF THE LIBRARY AT ELEVATION 1059.63 TO THE SHOWN CONTOUR 1059 TO THE NORTH, EAST, AND WEST OF THE BUILDING PERIMETER AND THE SURFACE AND SUB-SURFACE DRAINAGE SYSTEM SHOWN WITH READING GARDEN AS CONNECTING IN TO SD# 110 SHALL BE DELETED.

A-6 BID ALTERNATE NO. 6 – REDUCE SIZE OF MEETING ROOM IN ACCORDANCE WITH THE PLAN, DETAILS, AND SECTIONS SHOWN ON SHEET A11.01. IF THIS DEDUCTIVE BID ALTERNATE IS ACCEPTED AND THE SIZE OF THE MEETING ROOM IS REDUCED CONTRACTOR SHALL GRADE THE AREA WITH A UNIFORM CROSS SLOPE FROM THE PERIMETER OF THE BUILDING AT ELEVATION 1059.63 TO THE ELEVATIONS SHOWN ALONG THE SIDEWALK. NO CHANGES ARE REQUIRED WITH THE STORM DRAINAGE SYSTEM.

CITY PLAN NO.: CPXXXXXX

0 10' 20' 40'
SCALE: 1" = 20'

ENTEROS DESIGN
314 EXCHANGE ALLEY
PETERSBURG, VA 23804
804.861.1200 P
804.861.1253 F

All ideas, designs, arrangements and plans indicated or represented by this drawing are property of ENTEROS DESIGN, PC; created, evolved and developed for the sole use of this project. These ideas, design arrangements and/or plans shall not be used by or disclosed to any person, firm or corporation for any purpose without written permission from ENTEROS DESIGN, PC. Written dimensions on these drawings shall have precedence over scaled dimensions. Contractors shall verify and be responsible for all dimensions and conditions on the job. The Architect must be notified of any variations from the dimensions and conditions shown on these drawings. c 2015 ENTEROS DESIGN, PC

Mattern & Craig
ENGINEERS•SURVEYORS
701 FIRST STREET, S.W.
ROANOKE, VIRGINIA 24016
(540) 345-9342
FAX (540) 345-7691

WILLIAMSON ROAD LIBRARY
3837 Williamson Road, Roanoke, VA 24012

CONSTRUCTION DOCUMENTS

REVISIONS:

GRADING & STORM DRAINAGE PLAN

PROJ. NO.: 156003 DRAWN BY: ARB
04.13.16

COMMONWEALTH OF VIRGINIA
WM. THOMAS AUSTIN
Lic. No. 030907
4/13/16
PROFESSIONAL ENGINEER

C3.01

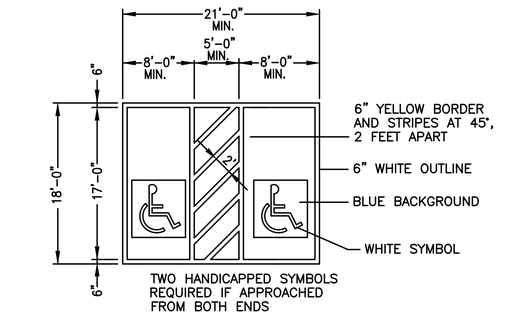

NOTE:
HANDICAP SIGNS SHALL BE LOCATED BEHIND WALK, CENTERED IN FRONT OF EACH HANDICAPPED PARKING SPACES.

STANDARD HANDICAPPED PARKING DETAILS

NO SCALE

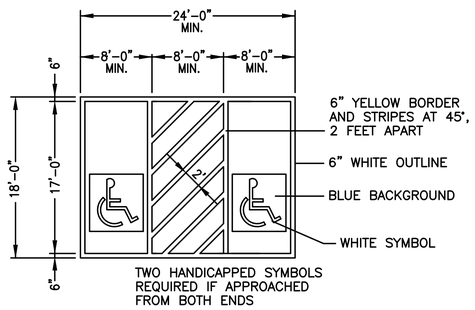

NOTE:
HANDICAP SIGNS SHALL BE LOCATED BEHIND WALK, CENTERED IN FRONT OF EACH HANDICAPPED PARKING SPACES. NOTE REQUIREMENT FOR "VAN ACCESSIBLE" ADD-ON SIGN.

VAN HANDICAPPED PARKING DETAILS

NO SCALE

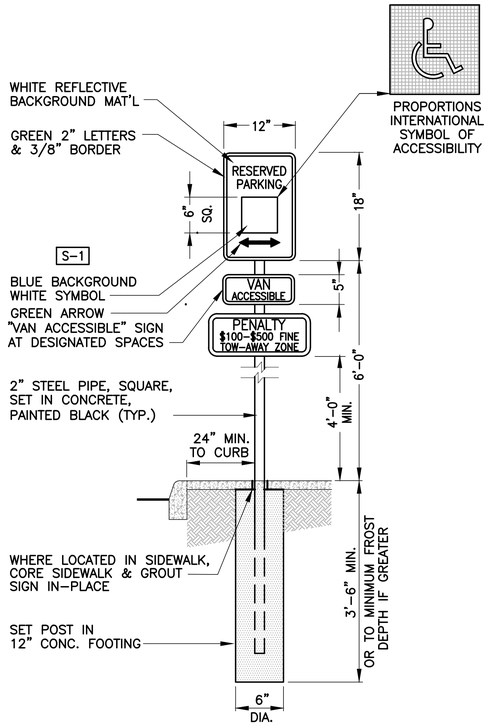

SIGN DETAIL

NO SCALE

NOTE:
PLACE "VAN ACCESSIBLE" SIGN IN FRONT OF VAN ACCESSIBLE SPACES ONLY.

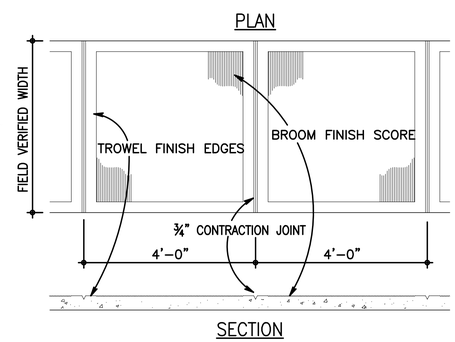

SIDEWALK FINISH DETAIL

NO SCALE

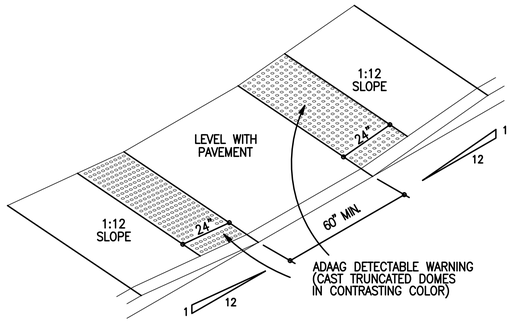

SIDEWALK RAMP DETAIL

NO SCALE

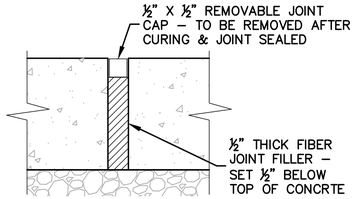

PRE-FORMED EXPANSION JOINT

NO SCALE

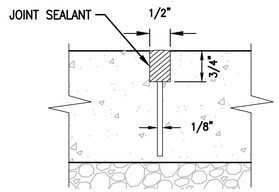

SAW-CUT CONTRACTION JOINT

NO SCALE

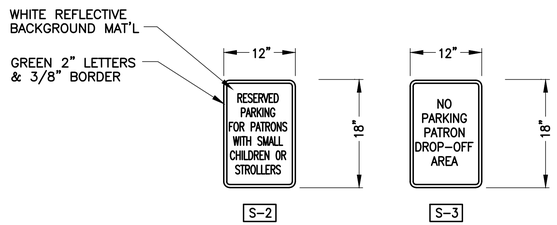

SIGN PANEL DETAIL

NO SCALE

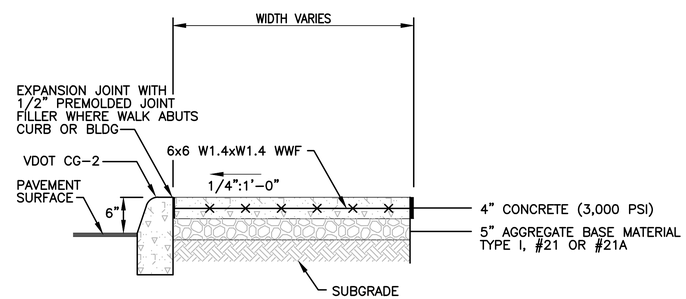

SIDEWALK SECTION

NO SCALE

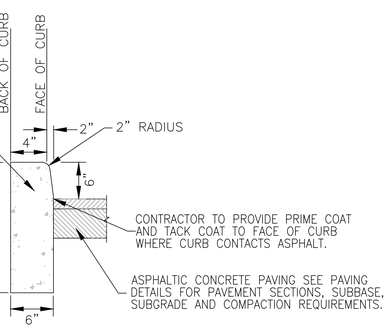

VDOT STANDARD CG-2 CONCRETE CURB

NO SCALE

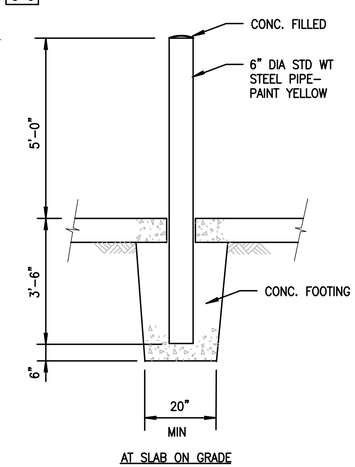

BOLLARD DETAIL

NO SCALE

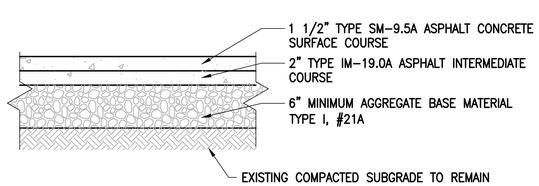

PAVEMENT SECTION - TYPE A - REGULAR DUTY ASPHALT

NO SCALE

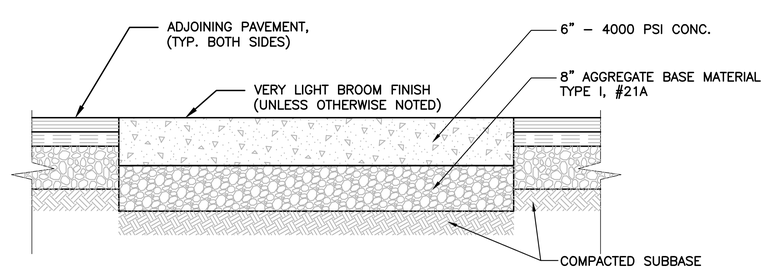

BOOK DROP CONCRETE PAD

NO SCALE

CITY PLAN NO.: CPXXXXXX

ENTEROS DESIGN
314 EXCHANGE ALLEY
PETERSBURG, VA 23804
804.861.1200 P
804.861.1253 F

All ideas, designs, arrangements and plans indicated or represented by this drawing are property of ENTEROS DESIGN, PC; created, evolved and developed for the sole use of this project. These ideas, design arrangements and/or plans shall not be used by or disclosed to any person, firm or corporation for any purpose without written permission from ENTEROS DESIGN, PC. Written dimensions on these drawings shall have precedence over scaled dimensions. Contractors shall verify and be responsible for all dimensions and conditions on the job. The Architect must be notified of any variations from the dimensions and conditions shown on these drawings.
c 2015 ENTEROS DESIGN, PC

Mattern & Craig ENGINEERS•SURVEYORS
701 FIRST STREET, S.W.
ROANOKE, VIRGINIA 24016
(540) 345-9342
FAX (540) 345-7691

WILLIAMSON ROAD LIBRARY
3837 Williamson Road, Roanoke, VA 24012

CONSTRUCTION DOCUMENTS

REVISIONS:

DETAILS & SECTIONS

PROJ. NO.: 156003 DRAWN BY: ARB
04.13.16

COMMONWEALTH OF VIRGINIA
WM. THOMAS AUSTIN
Lic. No. 030907
4/13/16
PROFESSIONAL ENGINEER

C4.01

IS-1

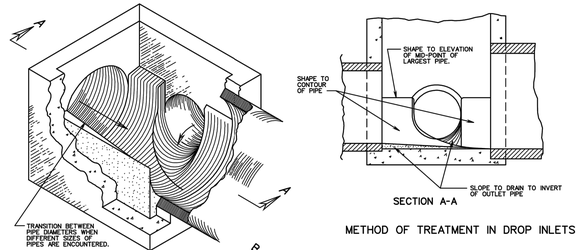

METHOD OF TREATMENT IN DROP INLETS

NOTES:
SHAPING OF MANHOLE AND INLET INVERTS IN ACCORDANCE WITH THIS DRAWING IS TO APPLY TO THOSE STRUCTURES SPECIFIED ON PLANS OR WHERE INVERT OF PIPE IS ABOVE INVERT OF STRUCTURE.

MANHOLE OR DROP INLET IS TO BE FORMED AND CONSTRUCTED IN ACCORDANCE WITH APPLICABLE STANDARD OF SPECIAL DRAWING. THE INVERT SHAPING AS DETAILED HEREON IS TO CONSIST OF A PORTLAND CEMENT CONCRETE MIX CONFORMING TO CLASS A3 OR CLASS C1 EXCEPT THAT 25% OF COARSE AGGREGATE MAY BE UP TO 4" IN DIAMETER AND CONSIST OF STONE, BROKEN BRICK, BROKEN CONCRETE OR BROKEN CONCRETE BLOCK. THE SURFACE SHALL BE LEFT SMOOTH BY MEANS OF HAND TROWELLING. NONE OF THE COARSE AGGREGATE SHALL REMAIN EXPOSED.

DETAILS OF INVERT SHAPING AS SHOWN HEREON ARE FOR EXAMPLE PURPOSES ONLY. EACH MANHOLE OR DROP INLET IS TO BE SHAPED INDIVIDUALLY TO BEST FIT THE PARTICULAR INLET AND OUTLET CONFIGURATION AND FLOW LINES.

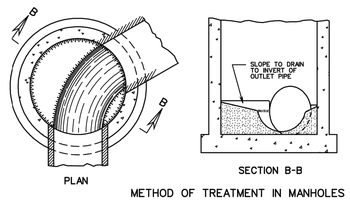

METHOD OF TREATMENT IN MANHOLES

VDOT ROAD AND BRIDGE STANDARDS		STANDARD METHOD OF SHAPING MANHOLE & INLET INVERTS VIRGINIA DEPARTMENT OF TRANSPORTATION	SPECIFICATION REFERENCE
SHEET 1 OF 1	REVISION DATE		302
106.08			

PB-1

GENERAL

1. METHOD "A" PIPE BEDDING SHALL BE USED FOR ALL TYPES OF PIPE CULVERTS WITHIN THE APPLICABLE HEIGHT OF COVER RANGE NOTED IN THE STANDARD PC-1 TABLES UNLESS OTHERWISE NOTED ON THE PLANS.
2. H = HEIGHT OF COVER MEASURED FROM TOP OF CULVERT TO FINISHED GRADE.
3. b = EXCAVATION DEPTH AS SHOWN ON PLANS OR TO FIRM BEARING SOIL.

CIRCULAR PIPE

1. D = OUTSIDE DIAMETER OF PIPE.
2. d = INSIDE DIAMETER OF PIPE.
3. X = WIDTH OF CLASS I BACKFILL MATERIAL BEYOND THE EXTREMITY OF THE PIPE.
   X = 12" WHERE d IS LESS THAN 36"
   X = 18" WHERE d IS 36" AND GREATER.
4. WHERE DIRECTED BY THE ENGINEER, BEDDING MATERIAL MAY BE ELIMINATED FOR NORMAL EARTH FOUNDATIONS UNDER ROUTINE ENTRANCE PIPE (EXCEPT PLASTIC PIPE) 30" AND LESS IN DIAMETER WITH HEIGHT OF COVER 15' OR LESS.
5. REGULAR BACKFILL MATERIAL MAY BE USED IN LIEU OF CLASS I BACKFILL MATERIAL FOR NORMAL EARTH FOUNDATIONS UNDER ROUTINE ENTRANCE PIPE (EXCEPT PLASTIC PIPE) 30" AND LESS IN DIAMETER WITH HEIGHT OF COVER 15' OR LESS.
6. BEDDING MATERIAL AND CLASS I BACKFILL MATERIAL MAY BE ELIMINATED FOR SHOULDER SLOT INLET (DI-13) OUTLET PIPES INSTALLATIONS.

ELLIPTICAL PIPE

1. S_1 = OUTSIDE SPAN DIMENSION OF PIPE.
2. S_2 = INSIDE SPAN DIMENSION OF PIPE.
3. R = OUTSIDE RISE DIMENSION OF PIPE.
4. X = WIDTH OF CLASS I BACKFILL MATERIAL BEYOND THE EXTREMITY OF THE PIPE.
   X = 12" WHERE S_2 IS LESS THAN 36"
   X = 18" WHERE S_2 IS 36" AND GREATER
5. WHERE DIRECTED BY THE ENGINEER, BEDDING MATERIAL MAY BE ELIMINATED FOR NORMAL EARTH FOUNDATIONS UNDER ROUTINE ENTRANCE PIPE WHERE S_2 IS 38" OR LESS AND HEIGHT OF COVER 15' OR LESS.
6. REGULAR BACKFILL MATERIAL MAY BE USED IN LIEU OF CLASS I BACKFILL MATERIAL FOR ALL FOUNDATION TYPES FOR ROUTINE ENTRANCE PIPE WHERE S_2 IS 38" OR LESS AND HEIGHT OF COVER 15' OR LESS.

PIPE ARCH

1. S = SPAN DIMENSION OF PIPE.
2. R = RISE DIMENSION OF PIPE.
3. B = SEE PC-1 TABLE FOR APPLICABLE PIPE MATERIAL
4. X = WIDTH OF CLASS IBACKFILL MATERIAL BEYOND THE EXTREMITY OF THE PIPE.
   X = 12" WHERE S_2 IS LESS THAN 36"
   X = 18" WHERE S_2 IS 36" AND GREATER
5. WHERE DIRECTED BY THE ENGINEER, BEDDING MATERIAL MAY BE ELIMINATED FOR NORMAL EARTH FOUNDATIONS UNDER ROUTINE ENTRANCE PIPE WHERE S_2 IS 38" OR LESS AND HEIGHT OF COVER 15' OR LESS.
6. REGULAR BACKFILL MATERIAL MAY BE USED IN LIEU OF CLASS I BACKFILL MATERIAL FOR ALL FOUNDATION TYPES FOR ROUTINE ENTRANCE PIPE WHERE S IS 35" OR LESS AND HEIGHT OF COVER 15' OR LESS.

SPECIFICATION REFERENCE	INSTALLATION OF PIPE CULVERTS & STORM SEWERS GENERAL NOTES VIRGINIA DEPARTMENT OF TRANSPORTATION	VDOT ROAD AND BRIDGE STANDARDS	
302 303		REVISION DATE	SHEET 1 OF 1
			107.00

PB-1

NO PROJECTION OF PIPE ABOVE GROUND LINE

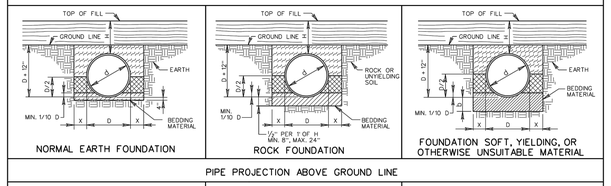

PIPE PROJECTION ABOVE GROUND LINE

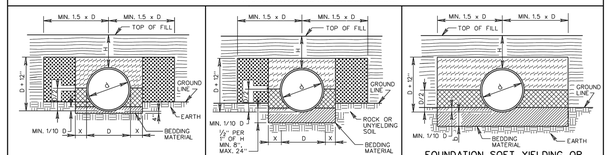

BEDDING MATERIAL IN ACCORDANCE WITH SECTION 302 OF THE ROAD AND BRIDGE SPECIFICATIONS.

CLASS I BACKFILL MATERIAL IN ACCORDANCE WITH SECTION 302 OF THE ROAD AND BRIDGE SPECIFICATIONS.

FOR PLASTIC PIPE CLASS I BACKFILL MATERIAL IN ACCORDANCE WITH SECTION 302 OF THE ROAD AND BRIDGE SPECIFICATIONS.

FOR ALL OTHER PIPE REGULAR BACKFILL MATERIAL IN ACCORDANCE WITH SECTION 302 OF THE ROAD AND BRIDGE SPECIFICATIONS.

EMBANKMENT

REGULAR BACKFILL MATERIAL IN ACCORDANCE WITH SECTION 302 OF THE ROAD AND BRIDGE SPECIFICATIONS.

NOTES:

FOR GENERAL NOTES ON PIPE BEDDING, SEE INSTALLATION OF PIPE CULVERTS AND STORM SEWERS GENERAL NOTES ON SHEET NO. 107.00.

CRUSHED GLASS CONFORMING TO THE SIZE REQUIREMENTS FOR CRUSHER RUN AGGREGATE SIZE 25 AND 26 MAY BE USED IN PLACE OF CLASS I BACKFILL.

VDOT ROAD AND BRIDGE STANDARDS		INSTALL. OF PIPE CULVERTS AND STORM SEWERS CIRC. PIPE BEDDING AND BACKFILL - METHOD "A" VIRGINIA DEPARTMENT OF TRANSPORTATION	SPECIFICATION REFERENCE
SHEET 1 OF 4	REVISION DATE		302 303
107.01	07/12		

NOTE: CLASS I BACKFILL SHALL BE CRUSHER RUN AGGREGATE SIZE NO. 25 OR 26, AGGREGATE BASE MATERIAL SIZE 21A OR 21B, FLOWABLE FILL, OR CRUSHED GLASS CONFORMING TO THE SIZE REQUIRED FOR CRUSHER RUN AGGREGATE SIZE 25 AND 26.

STORM DRAINAGE GENERAL NOTES:

1. STORM DRAINAGE PIPE AND DRAINAGE STRUCTURES SHALL COMPLY WITH ALL APPLICABLE VDOT STANDARDS AND SPECIFICATIONS. REFER TO "INSTALLATION OF PIPE CULVERTS & STORM SEWER GENERAL NOTES" AND DETAILS SHOWN ON VDOT STD. PB-1 ON THIS SHEET FOR ADDITIONAL INFORMATION.
2. THE INVERT OF ALL NEW STORM DRAINAGE INLETS AND MANHOLES SHALL CONFORM TO VDOT STD. IS-1 – "STANDARD METHOD OF SHAPING MANHOLE AND INLET INVERTS." REFER TO DETAIL ON THIS SHEET.
3. STORM DRAIN PIPE LENGTHS SHOWN HEREON ARE APPROXIMATE HORIZONTAL DISTANCES FROM CENTER OF STRUCTURE TO CENTER OF STRUCTURE. PIPE SLOPES SHOWN ARE COMPUTED USING INVERT OUT AT UPSTREAM STRUCTURE, INVERT IN AT DOWNSTREAM STRUCTURE, AND HORIZONTAL PIPE LENGTH MEASURES FROM CENTER OF STRUCTURE TO CENTER OF STRUCTURE.
4. UPON COMPLETION OF THE STORM DRAINAGE SYSTEM, THE CONTRACTOR SHALL FURNISH TO THE OWNER A FIELD SURVEYED FINAL CORRECT SET OF AS-BUILT PLANS OF THE NEWLY CONSTRUCTED STORM DRAIN AND/OR STORMWATER MANAGEMENT FACILITIES. AS-BUILT PLANS SHALL BE PROVIDED IN THE STATE PLANE VIRGINIA SOUTH COORDINATE SYSTEM, NAD 1983, FIPS 4502 FEET, US SURVEY FEET, DATUM NA 83, IN THE FORM OF 1 PAPER COPY AND 1 DIGITAL AUTOCAD FILE.
5. CONTRACTOR SHALL SUBMIT STORM DRAINAGE STRUCTURE FABRICATION ORDER SHEETS TO ENGINEER FOR REVIEW AND APPROVAL PRIOR TO START OF FABRICATION.

SD-100-103 PROFILE

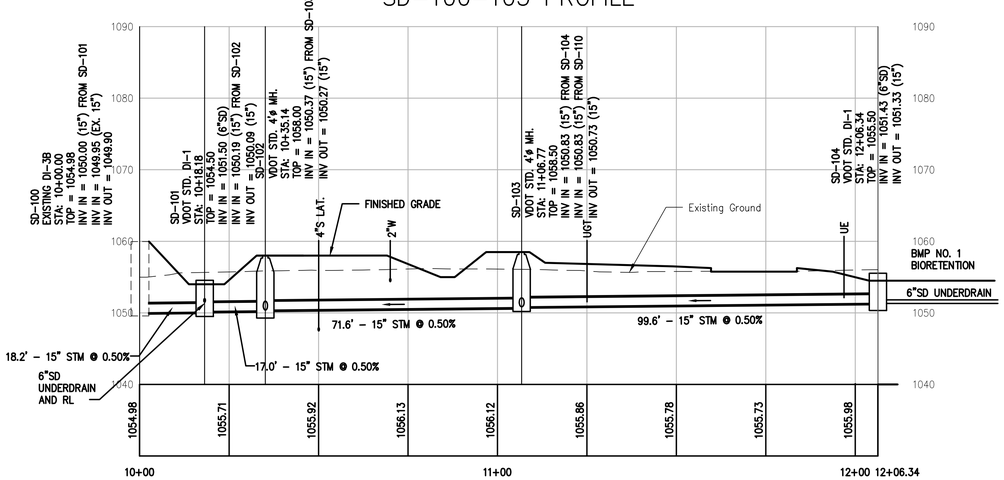

PROFILE– 15" STORM DRAIN

SCALE: 1"= 20' H.
1"= 10' V.

SD-102-110 PROFILE

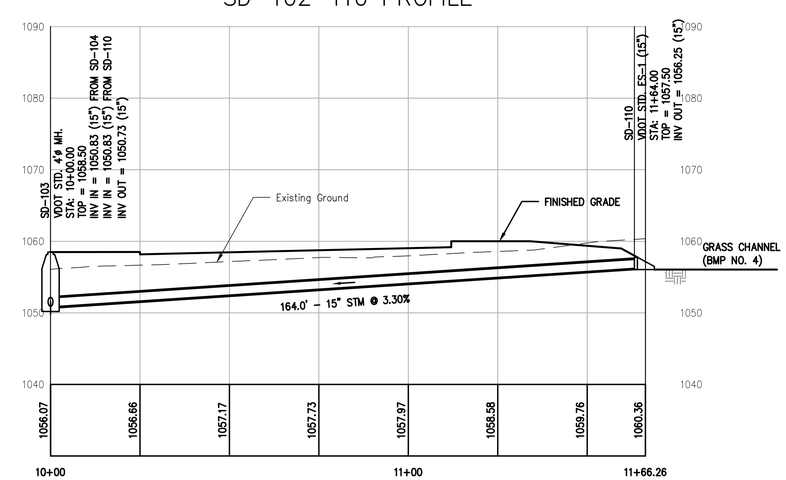

PROFILE– 15" STORM DRAIN

SCALE: 1"= 20' H.
1"= 10' V.

CITY PLAN NO.: CPXXXXX

0 10' 20' 40'
SCALE: 1" = 20'

ENTEROS DESIGN
314 EXCHANGE ALLEY
PETERSBURG, VA 23804
804.861.1200 P
804.861.1253 F

All ideas, designs, arrangements and plans indicated or represented by this drawing are property of ENTEROS DESIGN, PC; created, evolved and developed for the sole use of this project. These ideas, design arrangements and/or plans shall not be used by or disclosed to any person, firm or corporation for any purpose without written permission from ENTEROS DESIGN, PC. Written dimensions on these drawings shall have precedence over scaled dimensions. Contractors shall verify and be responsible for all dimensions and conditions on the job. The Architect must be notified of any variations from the dimensions and conditions shown on these drawings. c 2015 ENTEROS DESIGN, PC

Mattern & Craig
ENGINEERS•SURVEYORS
701 FIRST STREET, S.W.
ROANOKE, VIRGINIA 24016
(540) 345-9342
FAX (540) 345-7691

WILLIAMSON ROAD LIBRARY
3837 Williamson Road, Roanoke, VA 24012

CONSTRUCTION DOCUMENTS

REVISIONS:

DETAILS & SECTIONS

PROJ. NO.: 156003 DRAWN BY: ARB
04.13.16

COMMONWEALTH OF VIRGINIA
WM. THOMAS AUSTIN
Lic. No. 030907
4/13/16
PROFESSIONAL ENGINEER

C4.02

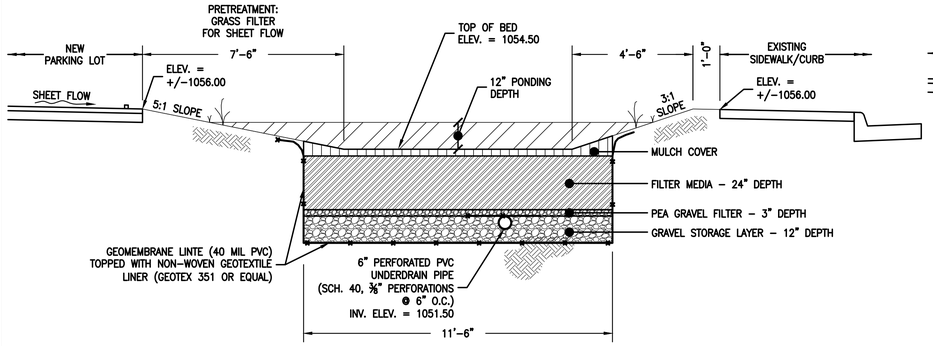

SECTION A–A
BMP NO. 1
BIORETENTION FILTER

NO SCALE

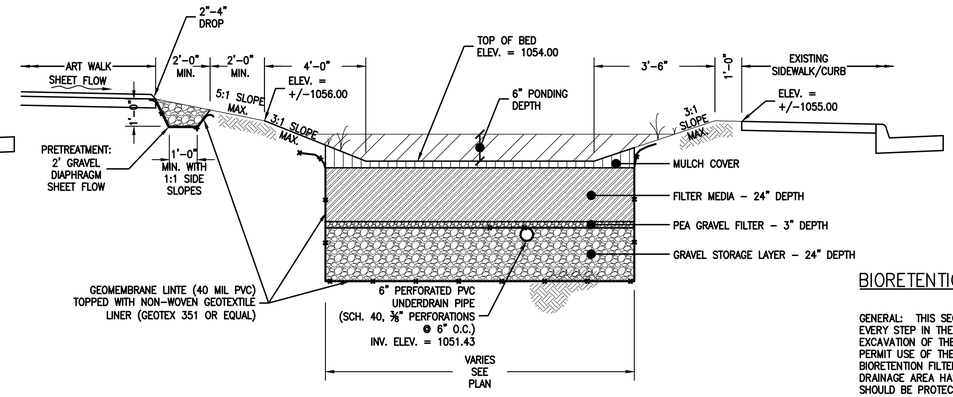

SECTION B–B
BMP NO. 3
BIORETENTION FILTER

NO SCALE

BIORETENTION SYSTEM SEQUENCE OF CONSTRUCTION:

GENERAL: THIS SEQUENCE IS A GENERAL OUTLINE AND IS NOT INTENDED TO SPECIFY EACH AND EVERY STEP IN THE PROCESS OF CONSTRUCTION THE BIORETENTION SYSTEM. IN GENERAL EXCAVATION OF THE FILTER MAY BE SCHEDULED WITH THE ROUGH GRADING OF THE PROJECT TO PERMIT USE OF THE EXCAVATED MATERIAL AS FILL ELSEWHERE ON THE SITE; HOWEVER, THE BIORETENTION FILTER MUST NOT BE CONSTRUCTED OR PLACED IN SERVICE UNTIL THE CONTRIBUTING DRAINAGE AREA HAS BEEN STABILIZED. THE LOCATIONS OF INFILTRATION BIORETENTION FILTER SHOULD BE PROTECTED BY SILT FENCE OR CONSTRUCTION FENCING TO PREVENT SOIL COMPACTION BY HEAVY EQUIPMENT.

THE SEQUENCE OF CONSTRUCTION SHALL GENERALLY BE AS FOLLOWS:

1. INSTALL EROSION AND SEDIMENT CONTROL MEASURES FOR THE SITE. REFER TO EROSION & SEDIMENT CONTROL PLANS AND REFER TO THE E&SC NARRATIVE / SEQUENCE.
2. WHEN GRADING WORK ADJACENT TO THE FILTERS HAS PROGRESSED TO GENERALLY SUBGRADE ELEVATION, ROUGH GRADE FILTER AREA TO ELEVATIONS SHOWN ON PLAN. INITIALLY, THE FILTER MAY BE EXCAVATED TO WITHIN ONE FOOT OF ITS FINAL BOTTOM ELEVATION. EXCAVATION TO FINISHED GRADE SHALL BE DEFERRED UNTIL ALL DISTURBED AREAS WITHIN THE CONTRIBUTING WATERSHED HAVE BEEN STABILIZED AND PROTECTED. CONSTRUCT DROP INLET AS SPECIFIED ON THE PLAN. DROP INLET SHALL BE BLOCKED OR OTHER MEASURES TAKEN TO PROHIBIT SEDIMENT–LADEN DRAINAGE FROM ENTERING THE DOWNSTREAM SYSTEM AND OTHER DOWNSTREAM BMP MEASURES. PROTECT EXCAVATED FILTER AREA WITH SILT FENCE OR OTHER APPROVED CONTROL MEASURES.
3. COMPLETE CONSTRUCTION OF UPSLOPE AREAS (TO THE MAXIMUM EXTENT PRACTICABLE) AND STABILIZE ALL AREAS DRAINING TO THE BIORETENTION FILTER. TO PROTECT THE FILTER AREA DURING FINAL ESTABLISHMENT, INSTALL ADDITIONAL SILT FENCE ALONG THE PERIMETER OF THE EXCAVATED FILTER AND/OR INSTALL CHECK DAMS AT POINT OF CONCENTRATED DISCHARGES.
4. REMOVE ALL ACCUMULATED SEDIMENT AND EXCAVATE THE BIORETENTION FILTER AREA TO PROPOSED DEPTH. EXCAVATORS OR BACKHOES SHOULD WORK FROM THE SIDES TO EXCAVATE THE BIORETENTION AREA TO ITS APPROPRIATE DESIGN DEPTH AND DIMENSIONS. EXCAVATING EQUIPMENT SHOULD HAVE SCOOPS WITH ADEQUATE REACH SO THEY DO NOT HAVE TO SIT INSIDE THE FOOTPRINT OF THE BIORETENTION AREA.
5. AFTER FINAL GRADING IS COMPLETED, DEEPLY TILL THE BASIN FLOOR WITH ROTARY TILLERS OR DISC HARROWS TO PROVIDE A WELL–AERATED, HIGHLY POROUS SURFACE TEXTURE.
6. PLACE GEOTEXTILE FABRIC ON THE SIDES OF THE BIORETENTION AREA WITH A 6–INCH OVERLAP ON THE SIDES. PLACE THE APPROPRIATE DEPTH OF #57 STONE ON THE BOTTOM (STORAGE LAYER), INSTALL THE PERFORATED UNDERDRAIN PIPE, PACK #57 STONE TO 3 INCHES ABOVE THE UNDERDRAIN PIPE, AND ADD APPROXIMATELY 3 INCHES OF CHOKER STONE/PEA GRAVEL AS A FILTER BETWEEN THE UNDERDRAIN AND THE SOIL MEDIA LAYER. LIGHTLY COMPACT WITH A LANDSCAPING ROLLER. REFER TO DETAIL / SECTION HEREON FOR ADDITIONAL INFORMATION.
7. FILL BIORETENTION FILTER AREA WITH FILTER MEDIA SOIL AND TOPSOIL. APPLY THE MEDIA IN 12–INCH LIFTS UNTIL THE DESIRED TOP ELEVATION OF THE BIORETENTION AREA IS ACHIEVED. WAIT A FEW DAYS TO CHECK FOR SETTLEMENT, AND ADD ADDITIONAL MEDIA, AS NEEDED, TO ACHIEVE THE DESIGN ELEVATION.
8. INSTALL VEGETATION AND GROUND COVER SPECIFIED IN THE PLANTING PLAN FOR BIORETENTION AREA. INSTALL MULCH LAYER.
9. INSTALL OUTLET PROTECTION STONE AND GRAVEL FLOW SPREADER AT OUTLET. IMMEDIATELY STABILIZE ALL AREAS DISTURBED DURING THIS PROCESS.
10. UPON STABILIZATION OF UPSLOPE DISTURBED AREAS, REMOVE ALL SEDIMENT CONTROLS AND STABILIZE ALL DISTURBED AREAS.

BIORETENTION FILTER MEDIA / PLANTING SOIL AND TOPSOIL REQUIREMENTS:

FILTER MEDIA:

THE BIORETENTION AREAS SHALL CONTAIN A FILTER MEDIA / PLANTING SOIL MIXTURE (GENERALLY CLASSIFIED AS A LOAMY COARSE SAND) CONSISTING OF:

- NO MORE THAN 10% CLAY
- NO MORE THAN 20% SILT + CLAY
- AT LEAST 75% OF THE SAND FRACTION SHOULD BE COARSE OR VERY COARSE SAND
- 3%–5% ORGANIC MATTER

ORGANIC MATTER SHALL BE IN THE FORM OF LEAF COMPOST (FULLY COMPOSTED, NOT PARTIALLY ROTTED LEAVES).

THE TOTAL VOLUME OF FILTER MEDIA PROVIDED SHALL BE 110% OF THE PLAN VOLUME, TO ACCOUNT FOR SETTLING OR COMPACTION. THE MEDIA MUST BE PROCURED FROM APPROVED FILTER MEDIA VENDORS AND SHALL BE TESTED AND CERTIFICATION TO THE ABOVE GRADATION / MIXTURE.

TOPSOIL:

TOPSOIL FOR TURF COVER AREAS SHALL BE A LOAMY SAND OR SANDY LOAM TEXTURE, WITH LESS THAN 5% CLAY CONTENT, PH CORRECTED TO BETWEEN 6 AND 7, AND AN ORGANIC MATTER CONTENT OF AT LEAST 2% AND SHALL BE FREE OF STONES, STUMPS, ROOTS, OR SIMILAR OBJECTS GREATER THAN ONE INCH, BRUSH, OR ANY OTHER MATERIAL OR SUBSTANCE WHICH MAY BE HARMFUL TO PLANT GROWTH, OR A HINDRANCE TO PLANT GROWTH OR MAINTENANCE. THE TOP SOIL SHALL BE FREE OF PLANTS OR PLANT PARTS OF BERMUDA GRASS, QUACK GRASS, JOHNSON GRASS, MUGWORT, NUTSEDGE, POISON IVY, CANADIAN THISTLE OR OTHERS AS SPECIFIED. IT SHALL NOT CONTAIN TOXIC SUBSTANCES HARMFUL TO PLANT GROWTH. THE TOP SOIL SHALL BE TESTED AND CERTIFIED TO MEET THE FOLLOWING CRITERIA:

- PH RANGE: 6.0 – 7.0
- ORGANIC MATTER: GREATER THAN 2%
- MAGNESIUM (MG): 100+ UNITS
- PHOSPHORUS (P205): 150+ UNITS
- POTASSIUM (K20): 120+ UNITS
- SOLUBLE SALTS: FOR SOIL – NOT TO EXCEED 900 PPM, FOR ORGANIC MIX NOT TO EXCEED 3,000 PPM

TESTING:

THE FOLLOWING TESTING FREQUENCIES SHALL APPLY TO THE ABOVE SOIL CONSTITUENTS:

- PH, ORGANIC MATTER: 1 TEST PER 90 CUBIC YARDS, BUT NO MORE THAN 1 TEST PER BIORETENTION AREA
- MAGNESIUM, PHOSPHORUS, POTASSIUM, SOLUBLE SALTS: 1 TEST PER 500 CUBIC YARDS, BUT NO LESS THAN 1 TEST PER BORROW SOURCE
- ONE GRAIN SIZE ANALYSIS SHALL PER PERFORMED PER 90 CUBIC YARDS OF PLANTING SOIL, BUT NO LESS THAN 1 TEST PER BIORETENTION AREA.

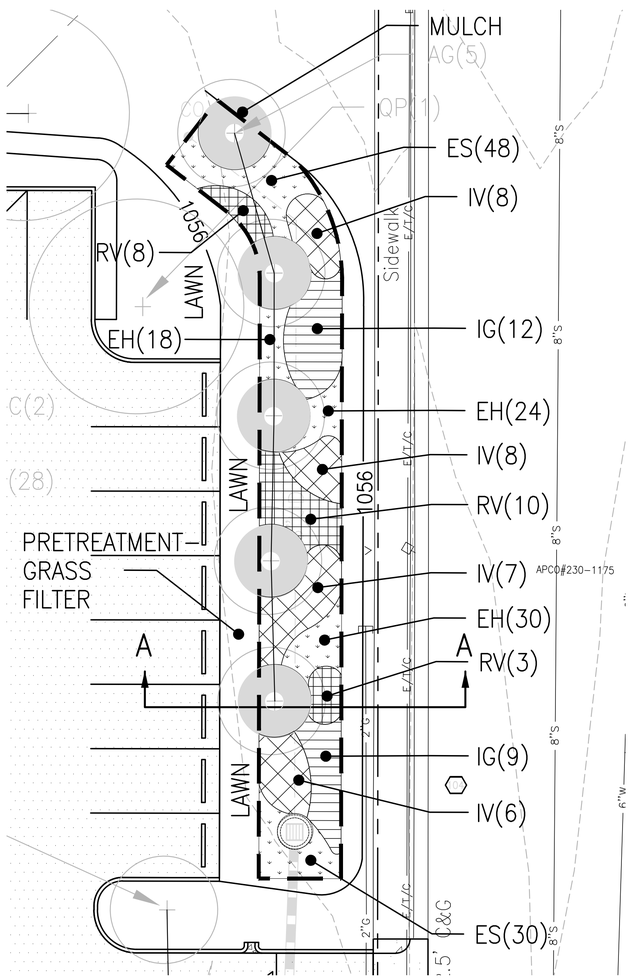

ENLARGED PLAN SHOWING BMP NO. 1 PLANTING

SCALE: 1"= 10'

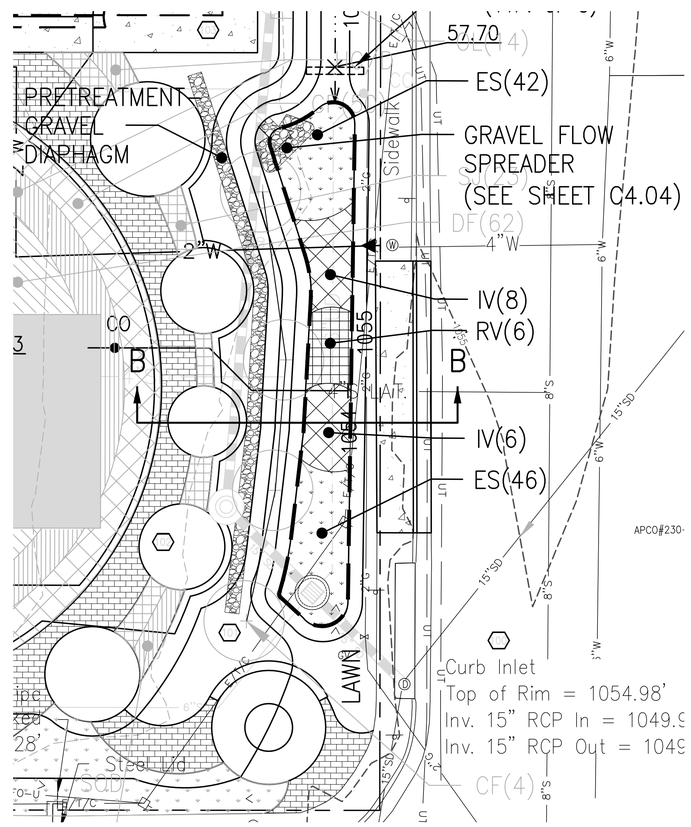

ENLARGED PLAN SHOWING BMP NO. 3 PLANTING

SCALE: 1"= 10'

CITY PLAN NO.: CPXXXXXX

ENTEROS DESIGN
314 EXCHANGE ALLEY
PETERSBURG, VA 23804
804.861.1200 P
804.861.1253 F

All ideas, designs, arrangements and plans indicated or represented by this drawing are property of ENTEROS DESIGN, PC; created, evolved and developed for the sole use of this project. These ideas, design arrangements and/or plans shall not be used by or disclosed to any person, firm or corporation for any purpose without written permission from ENTEROS DESIGN, PC. Written dimensions on these drawings shall have precedence over scaled dimensions. Contractors shall verify and be responsible for all dimensions and conditions on the job. The Architect must be notified of any variations from the dimensions and conditions shown on these drawings. c 2015 ENTEROS DESIGN, PC

Mattern & Craig ENGINEERS•SURVEYORS
701 FIRST STREET, S.W.
ROANOKE, VIRGINIA 24016
(540) 345–9342
FAX (540) 345–7691

WILLIAMSON ROAD LIBRARY
3837 Williamson Road, Roanoke, VA 24012

CONSTRUCTION DOCUMENTS

REVISIONS:

DETAILS & SECTIONS

PROJ. NO.: 156003 DRAWN BY: ARB
04.13.16

COMMONWEALTH OF VIRGINIA
WM. THOMAS AUSTIN
Lic. No. 030907
4/13/16
PROFESSIONAL ENGINEER

C4.03

TYPICAL DITCH SECTION & SCHEDULE

NO SCALE

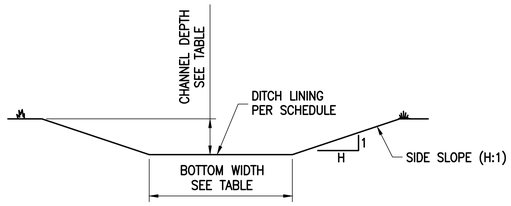

DITCH DESIGN SUMMARY TABLE		
DITCH ID	BMP 2	BMP 4
DESIGN FLOW - Q2 (CFS)	0.58	0.39
DESIGN FLOW - Q10 (CFS)	0.79	0.55
BOTTOM WIDTH (FT)	5.0	5.0
CHANNEL DEPTH, MIN. (FT)	1.50	1.50
SIDE SLOPE L/R (H:1)	3/3	3/3
CHANNEL SLOPE, MIN (%) [NOTE 2]	0.0	0.0
CHANNEL SLOPE, MAX (%)	1.00	1.00
DESIGN FLOW VELOCITY - Q2 (FPS)	1.05	0.91
DESIGN FLOW DEPTH - Q10 (FT)	0.69	0.60
TEMPORARY LINING MATERIAL	VDOT EC-2	VDOT EC-2
PERMANENT LINING MATERIAL	GRASSED	GRASSED
MANNINGS "N" (PERMANENT)	0.030	0.030
NOTES (SEE BELOW)	1.	1.

NOTES:

1. CHANNEL SHALL BE LINED WITH SOIL STABILIZATION BLANKETS AND MATTING IN ACCORDANCE WITH STD. AND SPEC. 3.36, TREATMENT - 1, VDOT EC-2.
2. CHECK DAMS ARE PLACED TO REDUCE EFFECTIVE SLOPE. SEE PLAN AND DETAIL.

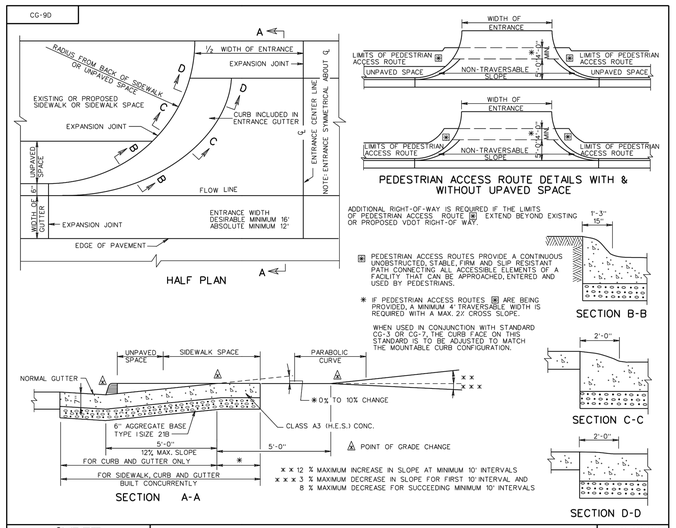

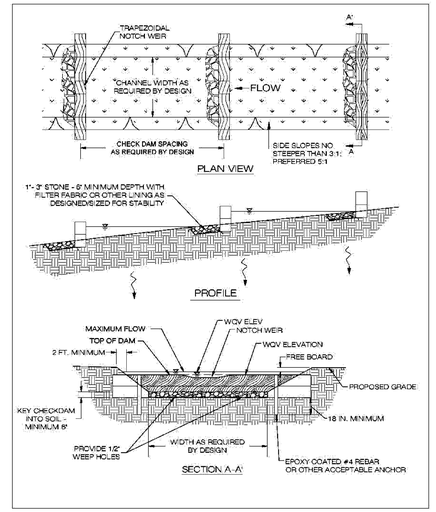

GRASS CHANNEL CHECK DAM

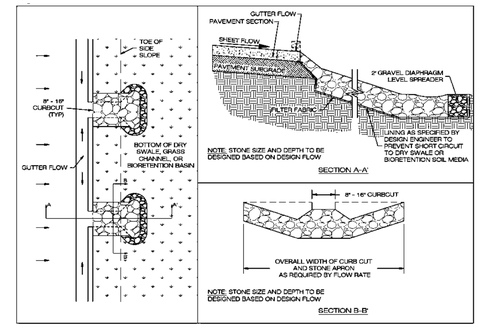

GRAVEL FLOW SPREADER

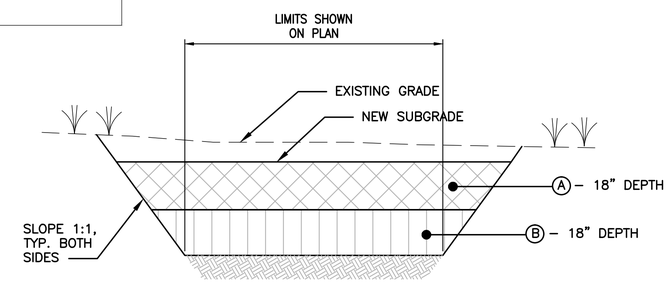

PARKING LOT AREA SOIL REMEDIATION NOTES:

(A) REMOVE EXISTING SOIL TO A DEPTH OF 18-INCHES BELOW THE FUTURE PARKING LOT SUBGRADE ELEVATION. STOCKPILE MATERIAL ON-SITE AT LOCATION SHOWN ON SHEET C5.01 OR OTHER AREA APPROVED BY OWNER. UPON COMPLETION OF TASK "B" RE-PLACE EXCAVATED MATERIAL AND COMPACT IN ACCORDANCE WITH SPECIFICATIONS FOR "FILL/EMBANKMENT."

(B) SCARIFY, TILL, DISC, AND AERATE REMAINING (18-INCHES) EXISTING SOIL IN-PLACE TO A DEPTH OF 36-INCHES BELOW THE FUTURE PARKING LOT SUBGRADE ELEVATION. RE-COMPACT EXISTING SOIL IN-PLACE IN ACCORDANCE WITH SPECIFICATIONS FOR "FILL/EMBANKMENT."

PARKING LOT AREA SOIL REMEDIATION

NO SCALE

1. BEDDING, HAUNCHING AND INITIAL BACKFILL CONSTRUCTION SHALL BE IN ACCORDANCE WITH THIS DETAIL AND MANUFACTURER'S RECOMMENDATION.
2. ALL PVC PIPE SHALL BE BEDDED IN COMPACTED VDOT #57 OR #58 STONE, OR CRUSHER RUN.
3. IN AREAS SUBJECTED TO VEHICULAR TRAFFIC, BEDDING STONE AND FILL SHALL BE PLACED IN 6" LIFTS FROM BOTTOM OF TRENCH TO 1' ABOVE THE PIPE AND THE REMAINING SHALL BE PLACED IN 10" LIFTS AND SHALL BE COMPACTED TO AT LEAST 90% OF MAXIMUM DENSITY AS DETERMINED BY ASTM D 698.
4. BEDDING REQUIREMENTS FOR DUCTILE IRON WATER LINE ARE DEPENDENT ON MANUFACTURER'S BEDDING CRITERIA.
5. ALL EXCAVATIONS SHALL COMPLY WITH OSHA TECHNICAL MANUAL, CHAPTER 2, TITLED "EXCAVATIONS: HAZARD RECOGNITION IN TRENCHING AND SHORING."
6. THE TRACER WIRE SHALL BE PLACED ALONG THE LOWER QUADRANT OF THE PIPE. THE WIRE SHALL NOT TOUCH THE PIPE, BUT SHALL BE A MAXIMUM OF 6" FROM THE PIPE. NON-METALLIC SPACERS MAY BE USED TO MAINTAIN A SET DISTANCE FROM THE UTILITY.

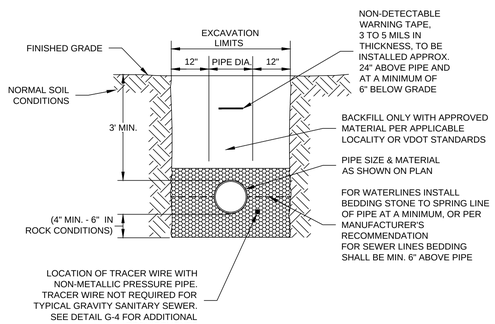

WESTERN VIRGINIA REGIONAL - CONSTRUCTION DETAIL

BEDDING AND BACKFILL OUTSIDE OF PAVED AREAS — 01/01/12 — G-11

1. BEDDING, HAUNCHING AND INITIAL BACKFILL CONSTRUCTION SHALL BE IN ACCORDANCE WITH THIS DETAIL AND MANUFACTURER'S RECOMMENDATION.
2. ALL PVC PIPE SHALL BE BEDDED IN COMPACTED VDOT #57 OR #58 STONE.
3. IN VDOT ROW, THE CONTRACTOR SHALL REPLACE THE OPEN CUT WITH A MINIMUM TOP COURSE OF 1.5" (MINIMUM) VDOT SM-9.5A, BASE COURSE OF 6" VDOT BM-25.0, AND SUBBASE OF 10" VDOT 21B, OR AS REQUIRED BY VDOT. IN ROANOKE CITY, CONTRACTOR SHALL REPLACE PAVEMENT AS REQUIRED BY CITY OF ROANOKE RIGHT OF WAY EXCAVATION AND RESTORATION STANDARDS, LATEST EDITION.
4. ALL CONSTRUCTION WITHIN THE PUBLIC RIGHT-OF-WAY SHALL BE AS SPECIFIED BY VDOT OR APPLICABLE LOCALITY.
5. PRIOR TO CONSTRUCTION, CONTRACTOR IS RESPONSIBLE FOR SECURING ALL REQUIRED PERMITS FROM VDOT AND/OR APPLICABLE LOCALITY.
6. IN AREAS SUBJECTED TO VEHICULAR TRAFFIC, BEDDING STONE AND FILL SHALL BE PLACED IN 6" LIFTS AND SHALL BE COMPACTED TO AT LEAST 95% OF MAXIMUM DENSITY AS DETERMINED BY ASTM D 698.
7. ALL SEWER LINE PIPE SHALL BE BEDDED IN COMPACTED GRANULAR MATERIAL. BEDDING REQUIREMENTS FOR DUCTILE SEWER LINE ARE DEPENDENT ON MANUFACTURER'S BEDDING CRITERIA.
8. BENCHCUT ON EACH SIDE OF PAVEMENT: CITY OF ROANOKE = 12"; VDOT RIGHT-OF-WAY = 6".
9. ALL EXCAVATIONS SHALL COMPLY WITH OSHA TECHNICAL MANUAL, CHAPTER 2, TITLED "EXCAVATIONS: HAZARD RECOGNITION IN TRENCHING AND SHORING."
10. THE TRACER WIRE SHALL BE PLACED ALONG THE LOWER QUADRANT OF THE PIPE. THE WIRE SHALL NOT TOUCH THE PIPE, BUT SHALL BE A MAXIMUM OF 6" FROM THE PIPE. NON-METALLIC SPACERS MAY BE USED TO MAINTAIN A SET DISTANCE FROM THE UTILITY.

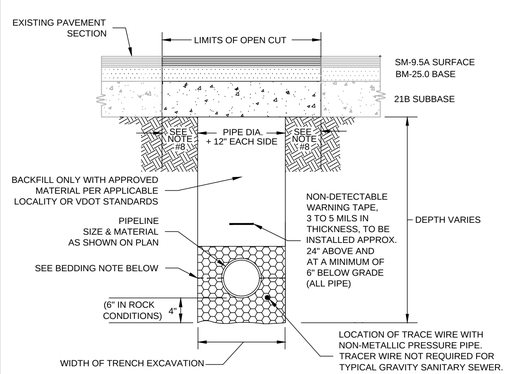

BEDDING: FOR WATERLINES, INSTALL BEDDING STONE TO SPRING LINE OF PIPE AT A MINIMUM, OR PER MANUFACTURER'S RECOMMENDATION, FOR SEWER LINES, BEDDING SHALL BE MINIMUM 6" ABOVE PIPE.

WESTERN VIRGINIA REGIONAL - CONSTRUCTION DETAIL

BEDDING AND BACKFILL UNDER PAVEMENT AND IN RIGHT-OF-WAY — 01/01/12 — G-12

1. TRAFFIC BEARING BOX AND LID REQUIRED IN TRAFFIC AREAS (CAPITOL FOUNDRY VB-9*S).
2. ALL PIPE AND FITTINGS SHALL BE OF SIMILAR MATERIAL.
3. ALL PIPE SHALL BE OF SAME SIZE.
4. NO BENDS ARE ALLOWED IN THE LATERAL FROM THE MAIN TO THE CLEANOUT STACK TEE. (EXCEPT FOR DEEP SEWER, AS SHOWN BELOW)
5. ALL MAIN LINE TAPS ON ACTIVE MAINS SHALL BE PERFORMED BY PARTICIPATING UTILITY.
6. PIPING ON PRIVATE SIDE OF CLEANOUT TO BE INSTALLED PER GOVERNING JURISDICTION REQUIREMENTS.
7. MINIMUM LATERAL SIZE: 4" FOR RESIDENTIAL SERVICE, 6" FOR NON-RESIDENTIAL SERVICE
8. MINIMUM COVER FOR ALL SEWER LATERALS SHALL BE THREE (3') FEET.
9. PROPERTY OWNER RESPONSIBLE FOR INSTALLING CLEANOUT ON PROPERTY LINE (IN ACCORDANCE WITH THIS DETAIL) WHEN MAINTENANCE OCCURS.
10. LOWEST SERVED FINISHED FLOOR ELEVATION SHALL BE A MINIMUM OF THREE FEET (3') ABOVE THE TOP OF THE MAIN AT THE POINT WHERE THE SERVICE LATERAL CONNECTS TO THE MAIN.
11. WHEN CONNECTING TO EXISTING LATERAL USE FERNCO FLEXIBLE COUPLING.

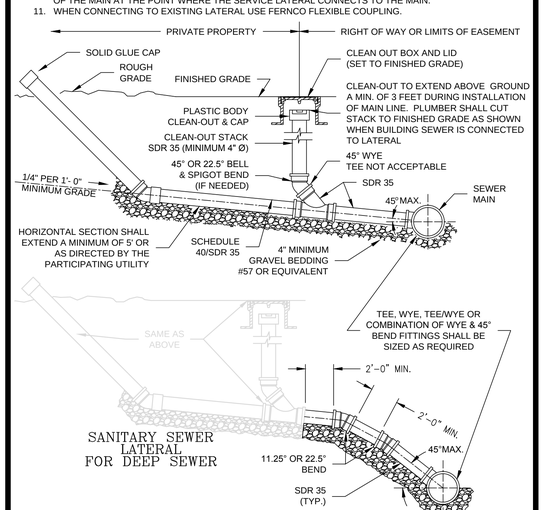

SANITARY SEWER LATERAL FOR DEEP SEWER

WESTERN VIRGINIA REGIONAL - CONSTRUCTION DETAIL

SANITARY SEWER LATERAL — 01/01/12 — S-6

CITY PLAN NO.: CPXXXXXX

ENTEROS DESIGN

314 EXCHANGE ALLEY
PETERSBURG, VA 23804

804.861.1200 P
804.861.1253 F

All ideas, designs, arrangements and plans indicated or represented by this drawing are property of ENTEROS DESIGN, PC; created, evolved and developed for the sole use of this project. These ideas, design arrangements and/or plans shall not be used by or disclosed to any person, firm or corporation for any purpose without written permission from ENTEROS DESIGN, PC. Written dimensions on these drawings shall have precedence over scaled dimensions. Contractors shall verify and be responsible for all dimensions and conditions on the job. The Architect must be notified of any variations from the dimensions and conditions shown on these drawings. c 2015 ENTEROS DESIGN, PC

Mattern & Craig
ENGINEERS•SURVEYORS

701 FIRST STREET, S.W.
ROANOKE, VIRGINIA 24016
(540) 345-9342
FAX (540) 345-7691

WILLIAMSON ROAD LIBRARY

3837 Williamson Road, Roanoke, VA 24012

CONSTRUCTION DOCUMENTS

REVISIONS:

DETAILS & SECTIONS

PROJ. NO.: 156003 DRAWN BY: ARB
04.13.16

COMMONWEALTH OF VIRGINIA
WM. THOMAS AUSTIN
Lic. No. 030907
4/13/16
PROFESSIONAL ENGINEER

C4.04

EROSION & SEDIMENT CONTROL SHEET NOTES:

1. THIS DRAWING IS INTENDED TO SHOW THE PERIMETER EROSION & SEDIMENT CONTROL (E&SC) MEASURES REQUIRED DURING THE CONSTRUCTION OF THE NEW BUILDING, STORM DRAINAGE SYSTEM, UTILITIES, AND OTHER SITE IMPROVEMENTS. ADDITIONAL REQUIRED MEASURES AND SEQUENCE OF WORK ARE SHOWN ON SUBSEQUENT SHEETS AND ARE SPECIFIED IN THE NARRATIVES, SEQUENCE OF WORK, AND STATEMENT OF COMPLIANCE WITH THE MINIMUM STANDARDS.

2. REFER TO SHEET C5.02 FOR EROSION & SEDIMENT CONTROL (E&SC) NARRATIVE AND REFER TO SHEET C5.03 FOR LISTING AND STATEMENT OF COMPLIANCE WITH THE MINIMUM STANDARDS.

3. REFER TO SHEET C5.04 FOR STANDARD E&SC DETAILS AND DESIGN SUMMARY DATA.

4. WHERE APPLICABLE, THIS SHEET SHOWS THE DRAINAGE AREAS (DIVIDES) AND THE TOTAL AREA (IN ACRES) DRAINING TO CRITICAL E&SC CONTROL MEASURES. THE AREAS DENOTED REPRESENT THE MAXIMUM AREA DRAINING TO A GIVEN MEASURE.

5. WHERE APPLICABLE, THIS DRAWING SHOWS THE TYPES AND APPROXIMATE LIMITS OF SOILS ANTICIPATED TO BE ENCOUNTERED ON THE SITE. ALL SOIL DATA IS TAKEN FROM UNITED STATED DEPARTMENT OF AGRICULTURE – NATURAL
RESOURCES CONSERVATION SERVICES – NATIONAL COOPERATIVE SOIL SURVEY PUBLICATIONS.

6. REFER TO E&SC NARRATIVE FOR INFORMATION REGARDING "CRITICAL EROSION AREAS."

7. A CERTIFIED RESPONSIBLE LAND DISTURBER (RLD) SHALL OVERSEE AND BE INVOLVED IN ALL ASPECTS OF THE LAND DISTURBANCE ACTIVITIES (FROM INITIAL LAND DISTURBANCE THROUGH FINAL STABILIZATION). THE NAME OF THE RLD SHALL BE PROVIDED TO PLAN REVIEWING AUTHORITY AT OR PRIOR TO THE PRECONSTRUCTION CONFERENCE. THIS PERSON SHALL ATTEND THE PRECONSTRUCTION CONFERENCE AND PROVIDE A COPY OF HIS RLD CERTIFICATE.

SOIL DATA TABULATIONS

MAP UNIT SYMBOL	SOIL NAME	SOIL CLASSIFICATION (UNIFIED)	HYDROLOGIC SOIL GROUP	EROSION FACTOR "K"	T-FACTOR	ERODIBILITY INDEX (EI)
53	URBAN LAND	CH, CL, CL-ML, SC	C	N/A	N/A	N/A
52	UDORTHENTS-URBAN LAND COMPLEX	CH, CL, CL-ML, SC	C	N/A	N/A	N/A
THESE ARE AREAS OF SOILS ALTERED BY MANMADE ACTIVITIES. SOIL CHARACTERISTICS ARE HIGHLY VARIABLE.						

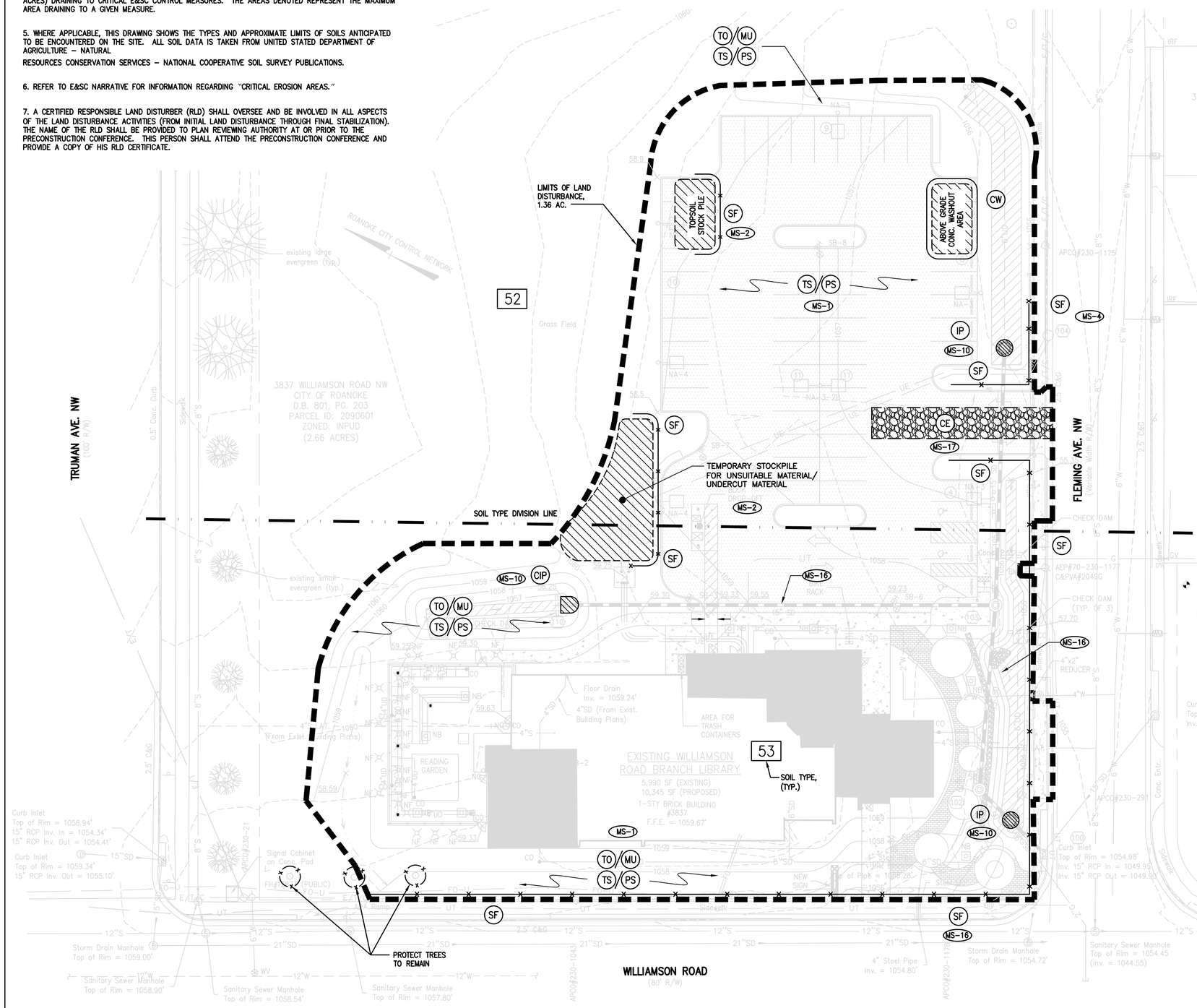

EROSION & SEDIMENT CONTROL GENERAL NOTES:

(ADOPTED FROM TABLE 6-1 OF THE VIRGINIA EROSION AND SEDIMENT CONTROL HANDBOOK)

ES-1. UNLESS OTHERWISE INDICATED, ALL VEGETATIVE AND STRUCTURAL EROSION AND SEDIMENT CONTROL PRACTICES WILL BE CONSTRUCTED AND MAINTAINED ACCORDING TO MINIMUM STANDARDS AND SPECIFICATIONS OF THE VIRGINIA EROSION AND SEDIMENT CONTROL HANDBOOK AND VIRGINIA REGULATIONS 4VAC50-30 EROSION AND SEDIMENT CONTROL REGULATIONS.

ES-2. UNLESS OTHERWISE NOTED HEREON OR STIPULATED BY THE LAND DISTURBING PERMIT, THE PLAN APPROVING AUTHORITY MUST BE NOTIFIED ONE WEEK PRIOR TO THE PRECONSTRUCTION CONFERENCE, ONE WEEK PRIOR TO THE COMMENCEMENT OF LAND DISTURBING ACTIVITY, AND ONE WEEK PRIOR TO THE FINAL INSPECTION.

ES-3. UNLESS OTHERWISE NOTED IN THE E&SC NARRATIVE, PERIMETER CONTROLS AND SEDIMENT TRAPS SHALL BE CONSTRUCTED AS A FIRST STEP IN ANY LAND DISTURBING ACTIVITY AND SHALL BE MADE FUNCTIONAL BEFORE UPSLOPE LAND DISTURBANCE TAKES PLACE.

ES-4. A COPY OF THE APPROVED EROSION AND SEDIMENT CONTROL PLAN SHALL BE MAINTAINED ON THE SITE AT ALL TIMES.

ES-5. PRIOR TO COMMENCING LAND DISTURBING ACTIVITIES IN AREAS OTHER THAN INDICATED ON THESE PLANS (INCLUDING, BUT NOT LIMITED TO, OFF-SITE BORROW OR WASTE AREAS), THE CONTRACTOR SHALL SUBMIT A SUPPLEMENTARY EROSION CONTROL PLAN FOR REVIEW AND APPROVAL BY THE PLAN APPROVING AUTHORITY OR PROVIDE DOCUMENTATION OF APPROVAL / PERMITTING FOR SAID SITE.

ES-6. THE CONTRACTOR IS RESPONSIBLE FOR INSTALLATION OF ANY ADDITIONAL EROSION CONTROL MEASURES NECESSARY TO PREVENT EROSION AND SEDIMENTATION AS DETERMINED BY THE PLAN APPROVING AUTHORITY.

ES-7. ALL DISTURBED AREAS ARE TO DRAIN TO APPROVED SEDIMENT CONTROL MEASURES AT ALL TIMES DURING LAND DISTURBING ACTIVITIES AND DURING SITE DEVELOPMENT UNTIL FINAL STABILIZATION IS ACHIEVED.

ES-8. DURING DEWATERING OPERATIONS, WATER WILL BE PUMPED INTO AN APPROVED FILTERING DEVICE.

ES-9. THE CONTRACTOR SHALL INSPECT ALL EROSION CONTROL MEASURES PERIODICALLY AND AFTER EACH RUNOFF-PRODUCING RAINFALL EVENT. ANY NECESSARY REPAIRS OR CLEANUP TO MAINTAIN THE EFFECTIVENESS OF THE EROSION CONTROL DEVICES SHALL BE MADE IMMEDIATELY.

ES-10. THE EROSION AND SEDIMENT CONTROL (E&SC) MEASURES SHOWN ON THESE SHEETS ARE TO BE CONSTRUCTED DURING THE SITE GRADING AND CONSTRUCTION. REFER TO THE FOLLOWING SHEETS FOR EROSION AND SEDIMENT CONTROL NARRATIVE, SEQUENCE OF WORK, DETAILS, AND DESIGN DATA.

ES-11. STABILIZATION MEASURES SHALL BE APPLIED TO EARTHEN STRUCTURES SUCH AS DAMS, DIKES, AND DIVERSIONS IMMEDIATELY AFTER INSTALLATION.

ES-12. DURING CONSTRUCTION OF THE PROJECT, SOIL STOCKPILES AND BORROW AREAS SHALL BE STABILIZED OR PROTECTED WITH SEDIMENT TRAPPING MEASURES. THE CONTRACTOR IS RESPONSIBLE FOR THE TEMPORARY PROTECTION AND PERMANENT STABILIZATION OF ALL SOIL STOCKPILES ON SITE AS WELL AS BORROW AREAS AND SOIL INTENTIONALLY TRANSPORTED FROM THE PROJECT SITE.

ES-13. PERMANENT OR TEMPORARY SOIL STABILIZATION MEASURES SHALL BE APPLIED TO DENUDED AREAS WITHIN SEVEN (7) DAYS AFTER FINAL GRADE IS REACHED ON ANY PORTION OF THE SITE.

ES-14. TEMPORARY SOIL STABILIZATION MEASURES SHALL BE APPLIED WITHIN SEVEN (7) DAYS TO DENUDED AREAS THAT MAY NOT BE AT FINAL GRADE BUT WILL REMAIN DORMANT FOR LONGER THAN FOURTEEN (14) DAYS. PERMANENT STABILIZATION MEASURES SHALL BE APPLIED TO AREAS THAT ARE TO BE LEFT DORMANT FOR MORE THAN ONE YEAR.

ES-15. PERMANENT SEEDING APPLIED TO ALL MECHANICALLY STABILIZED SLOPES AND SLOPES STEEPER THAN 3:1 AND SHALL MEET THE FOLLOWING SEED MIXTURE:

POUNDS PER ACRE	SEED TYPE
108	KENTUCKY 31
2	RED TOP
20	SEASONAL NURSE CROP (ANNUAL RYE, FOXTAIL MILLET, & WINTER RYE MIX)
20	CROWN VETCH

ES-16. ALL AREAS DISTURBED BY THE WORK OF THIS PROJECT SHALL BE STABILIZED BY EITHER THE CONSTRUCTION OF A PERMANENT SURFACE SUCH AS CURB, PAVEMENT, OR CONCRETE SIDEWALK, OR STABILIZED BY MEANS OF PERMANENT SEEDING OR ANOTHER APPROVED STABILIZATION METHOD.

ES-17. FOLLOWING THE COMPLETION OF SITE DEVELOPMENT CONSTRUCTION/GRADING, CONFIRMED STABILIZATION OF ALL DISTURBED AREAS, CONFIRMATION THAT EROSION OR SEDIMENTATION IS NO LONGER OCCURRING ON THE PROJECT SITE OR AT ITS BOUNDARIES, CONFIRMATION THAT DRAINAGE FLOWS ARE FUNCTIONING ACCORDING TO DESIGN, AND APPROVAL HAS BEEN GRANTED BY THE ROANOKE COUNTY EROSION AND SEDIMENT CONTROL INSPECTOR, THE CONTRACTOR MAY THEN BEGIN TO REMOVE THE TEMPORARY EROSION AND SEDIMENT CONTROL DEVICES. THIS WORK SHALL BE DONE IN A CAREFUL, NEAT, AND ORGANIZED MANNER. IF DEWATERING IS REQUIRED, WATER SHALL BE PUMPED TO AN APPROVED FILTERING DEVICE.

(MS-XX) REFER TO REQUIREMENTS FOR "MINIMUM STANDARDS" LISTED ON SHET C5.04.

EROSION & SEDIMENT CONTROL SYMBOLS LEGEND

- (CE) TEMPORARY STONE CONSTRUCTION ENTRANCE (STD. 3.02) MS-17
- (IP) TEMPORARY INLET PROTECTION (STD. 3.07) MS-10
- (TO) TOPSOILING (STD. 3.30)
- (MU) MULCHING (STD. 3.35)
- (SF) SILT FENCE (WITHOUT WIRE SUPPORT) (STD. 3.05) MS-4
- (CW) ABOVE GRADE WASH-OUT STRUCTURE (SEE C5.04 FOR DETAIL)
- LIMITS OF LAND DISTURBANCE
- DRAINAGE DIVIDE
- (CIP) CULVERT INLET PROTECTION (STD. 3.08)
- (TS) TEMPORARY SEEDING (STD. 3.31) MS-1 & MS-3
- (PS) PERMANENT SEEDING MIXTURE (STD. 3.32) MS-1 & MS-3

CITY PLAN NO.: CPXXXXXX

0 10' 20' 40'
SCALE: 1" = 20'

ENTEROS DESIGN
314 EXCHANGE ALLEY
PETERSBURG, VA 23804
804.861.1200 P
804.861.1253 F

All ideas, designs, arrangements and plans indicated or represented by this drawing are property of ENTEROS DESIGN, PC; created, evolved and developed for the sole use of this project. These ideas, design arrangements and/or plans shall not be used by or disclosed to any person, firm or corporation for any purpose without written permission from ENTEROS DESIGN, PC. Written dimensions on these drawings shall have precedence over scaled dimensions. Contractors shall verify and be responsible for all dimensions and conditions on the job. The Architect must be notified of any variations from the dimensions and conditions shown on these drawings. c 2015 ENTEROS DESIGN, PC

Mattern & Craig ENGINEERS•SURVEYORS
701 FIRST STREET, S.W.
ROANOKE, VIRGINIA 24016
(540) 345-9342
FAX (540) 345-7691

WILLIAMSON ROAD LIBRARY
3837 Williamson Road, Roanoke, VA 24012

CONSTRUCTION DOCUMENTS

REVISIONS:

EROSION & SEDIMENT CONTROL PLAN

PROJ. NO.: 156003 DRAWN BY: ARB
04.13.16

COMMONWEALTH OF VIRGINIA
WM. THOMAS AUSTIN
Lic. No. 030907
4/13/16
PROFESSIONAL ENGINEER

C5.01

EROSION & SEDIMENT CONTROL NARRATIVE:

1. PROJECT DESCRIPTION:

1.1 THE PURPOSE OF THIS PROJECT IS TO PERFORM CLEARING AND GRADING, STORM DRAINAGE INSTALLATION, UTILITY CONSTRUCTION (WATER AND SEWER SERVICES), PAVING, AND OTHER SITE DEVELOPMENT CONSTRUCTION REQUIRED FOR ADDITIONS TO THE EXISTING WILLIAMSON ROAD LIBRARY AND SUPPORTING PARKING AREAS AND SITE FEATURES.

1.2 THE PROJECT SITE AREA IS CONTAINED WITHIN A SINGLE PARCEL OF LAND – CITY OF ROANOKE TAX PARCEL NUMBER 2090601 AND HAS A SITE AREA OF 2.661 ACRES. SEE SHEET C1.01 (EXISTING CONDITIONS / DEMOLITION & REMOVAL PLAN) FOR ADDITIONAL INFORMATION REGARDING THE PROPERTY LINES WHICH DEFINE THE PROJECT SITE AREA.

1.3 THE TOTAL AREA OF PROPOSED LAND DISTURBANCE IS 1.36 ACRES AS SHOWN ON SHEET C5.01 & C5.02.

1.4 TO MINIMIZE THE POTENTIAL FOR SILT-LADEN RUNOFF LEAVING THE SITE, EROSION AND SEDIMENT CONTROL (E&SC) MEASURES SHALL BE PROVIDED AS SHOWN AND SPECIFIED ON THESE PLANS AND AS OUTLINED IN THIS E&SC NARRATIVE. THE E&SC MEASURES SHALL BE INSTALLED IN ACCORDANCE WITH THE "CITY OF ROANOKE EROSION AND SEDIMENT CONTROL ORDINANCE" AND THE DETAILS AND SPECIFICATIONS FOUND IN THE "VIRGINIA EROSION AND SEDIMENT CONTROL HANDBOOK", LATEST EDITION.

2. EXISTING SITE CONDITIONS:

2.1 LAND COVER: THE EXISTING SITE IS DEVELOPED AS A PUBLIC LIBRARY WITH A PARKING LOT AND SIDEWALKS. THE LIBRARY AND PARKING LOT IS LOCATED IN THE SOUTHWEST CORNER OF THE LOT. THE NORTH AND EASTERN PORTION OF THE SITE IS OPEN FIELD COVERED IN MATURE GRASS. THE SITE IS BOUND ON ALL FOUR SIDES BY EITHER PUBLIC STREETS OR PRIVATE DRIVES THAT SERVE THE ADJOINING SCHOOL. THERE ARE NO AREAS OF TREE COVER / WOODED AREAS ON THE SITE, BUT THERE ARE STAND-ALONE LANDSCAPING TREES PLANTED ALONG THE PERIMETER OF THE SITE.

2.2 SLOPES/TOPOGRAPHY: THE EXISTING TOPOGRAPHY (SHOWN AT 1-FOOT CONTOUR INTERVAL) IS SHOWN ON SHEET C1.01. THE OVERALL SITE GENERALLY SLOPES UNIFORMLY FROM NORTH TO SOUTH WITH THE HIGH-POINT ON THE SITE BEING THE NORTHERN CORNER AND THE LOW-POINT OF THE SITE BEING THE CURB INLET LOCATED NEAR THE INTERSECTION OF WILLIAMSON ROAD AND FLEMING AVENUE. THE OPEN FIELD AREAS (VENTRAL AREA OF THE SITE) GENERALLY SLOPE AT +/- 4-PERCENT.

2.3 DRAINAGE FEATURES: THERE ARE NO EXISTING PROMINENT DRAINAGE FEATURES WITHIN THE PROJECT AREA. STORMWATER RUN-OFF FROM THE SITE GENERALLY DRAINS FROM THE HIGH-POINT OF THE SITE TOWARD FLEMING AVENUE WHERE IT SHEET FLOWS INTO THE CURB & GUTTER ALONG FLEMING AVENUE AND THEN INTO THE STORM DRAINAGE INLET NEAR THE INTERSECTION OF WILLIAMSON ROAD AND FLEMING AVENUE. THE ENTIRE PARKING LOT AND A SMALL PORTION OF THE BUILDING DRAINS BY SHEET-FLOW INTO FLEMING AVENUE. THE MAJORITY OF THE BUILDING AND THE LAWN AREA BETWEEN THE BUILDING AND WILLIAMSON ROAD FLOWS INTO WILLIAMSON ROAD VIA A ROOF DRAIN PIPED SYSTEM AND SHEET FLOW. THE LOCATION OF THE DRAINAGE FEATURES ARE SHOWN ON SHEET C1.01.

3. ADJACENT PROPERTY:

3.1 THE PROJECT SITE IS BORDERED ON THE SOUTH BY EXISTING FLEMING AVENUE WHICH RUNS IN AN EAST TO WEST DIRECTION ALONG THE FRONTAGE OF THE SITE. RUN-OFF FROM THE SITE SHEET FLOWS INTO THE CURB LINE ALONG FLEMING AVENUE AND IS COLLECTED BY A STORM DRAINAGE INLET. RUN-OFF FROM FLEMING AVENUE IS COLLECTED BY CURB & GUTTER WILL NOT FLOW ONTO THE PROJECT SITE.

3.2 THE PROJECT SITE IS BORDERED ON THE WEST BY EXISTING WILLIAMSON ROAD WHICH RUNS IN A SOUTH TO NORTH DIRECTION ALONG THE FRONTAGE OF THE SITE. RUN-OFF FROM THE EXISTING BUILDING AND A SMALL AREA OF THE LAWN BETWEEN THE BUILDING AND ROAD SHEET FLOWS INTO THE CURB LINE ALONG WILLIAMSON ROAD AND IS COLLECTED BY A STORM DRAINAGE INLET LOCATE ON FLEMING AVENUE. RUN-OFF FROM WILLIAMSON ROAD IS COLLECTED BY CURB & GUTTER AND WILL NOT FLOW ONTO THE PROJECT SITE.

3.3 THE PROJECT SITE IS BORDERED ON THE NORTH BY EXISTING TRUMAN AVENUE WHICH RUNS IN A WEST TO EAST DIRECTION ALONG THE FRONTAGE OF THE SITE. SINCE RUN-OFF FROM THE SITE IS GENERALLY FLOWING IN A NORTH TO SOUTH DIRECTION AND TRUMAN AVENUE IS LOCATED UPGRADE FROM THE SITE, NO SITE RUN-OFF WILL ENTER TRUMAN AVENUE. RUN-OFF FROM TRUMAN AVENUE IS COLLECTED IN A CURB & GUTTER AND WILL NOT FLOW ONTO THE PROJECT SITE.

3.4 THE PROJECT SITE IS BORDERED ON THE WEST BY THE EXISTING DEVELOPMENT CONSISTING A PUBLIC SCHOOL PARKING LOT AND ACCESS DRIVES. THE ADJOINING PARKING LOT GENERALLY SLOPES TO THE WEST AND SOUTH, THUS RUN-OFF FROM THE SMALL DISCRETE AREAS OF THE PARKING LOT WILL SHEET FLOW ONTO THE PROJECT SITE.

4. SOILS:

4.1 A DETAILED SUBSURFACE EXPLORATION AND GEOTECHNICAL ENGINEERING EVALUATION WAS PERFORMED FOR THIS PORTION OF THE PROJECT. THE SOILS THAT ARE CURRENTLY IN-PLACE ARE EITHER NATIVE IN-SITU SOILS OR FROM PRIOR GRADING ACTIVITIES. THE SOILS WERE CLASSIFIED AS GENERALLY SANDS (SC) AND CLAYS (CH AND CL).

4.2 PER THE USDA WEB SOIL SURVEY (WSS), THE SOIL TYPES WITHIN THE PROJECT LIMITS ARE:

4.2.1 URBAN LAND AND UDORTHENTS-URBAN LAND COMPLEX. THE URBAN LAND SOIL UNIT IS A MISCELLANEOUS AREA. WET AREAS GENERALLY MAKE UP 5 PERCENT OF THE MAP UNIT. SLOPES ARE 0 TO 2 PERCENT. THIS COMPONENT IS ON DEPRESSIONS ON FLOOD PLAINS ON VALLEYS. THE PARENT MATERIAL CONSISTS OF ALLUVIUM. DEPTH TO A ROOT RESTRICTIVE LAYER IS GREATER THAN 60 INCHES. THE NATURAL DRAINAGE CLASS IS POORLY DRAINED – DUE TO IMPERVIOUS SURFACES AND COMPACTION OF SOIL. WATER MOVEMENT IN THE MOST RESTRICTIVE LAYER IS MODERATELY HIGH. AVAILABLE WATER TO A DEPTH OF 60 INCHES IS HIGH. SHRINK-SWELL POTENTIAL IS LOW. THIS SOIL IS OCCASIONALLY FLOODED. IT IS OCCASIONALLY PONDED. A SEASONAL ZONE OF WATER SATURATION IS AT 9 INCHES DURING JANUARY, FEBRUARY, MARCH, APRIL, MAY, AND DECEMBER. ORGANIC MATTER CONTENT IN THE SURFACE HORIZON IS ABOUT 3 PERCENT.

4.3 BASED ON A REVIEW OF THE AVAILABLE SUB-SURFACE INVESTIGATIONS AND KNOWLEDGE OF THE ON-SITE SOILS, THE SOILS ARE NOT DEEMED "MODERATELY ERODIBLE."

4.4 IT IS ANTICIPATED THE EARTHWORK FOR THE PROJECT WILL NOT BALANCE AND THAT THE AREA OF THE PARKING LOT MAY NEED TO BE UNDERCUT. BASED ON THIS ASSUMPTION, IT IS LIKELY THAT UNSUITABLE MATERIALS WILL NEED TO BE HAULED OFF THE SITE AND SUITABLE MATERIALS WILL BE IMPORTED AND PLACED IN THE AREA OF THE PARKING LOT. MATERIAL HAULED FROM THE PROJECT SITE WILL BE DISPOSED OF IN A LEGAL MANNER ON A PERMITTED SITE.

5. CRITICAL EROSION AREAS: NONE IDENTIFIED.

6. EROSION AND SEDIMENT CONTROL MEASURES:

6.1 UNLESS OTHERWISE INDICATED, ALL VEGETATIVE AND STRUCTURAL EROSION AND SEDIMENT CONTROL MEASURES WILL BE CONSTRUCTED AND MAINTAINED IN ACCORDANCE WITH THE MINIMUM STANDARDS AND SPECIFICATIONS (STD. AND SPEC.) OF THE LATEST EDITION OF THE "VIRGINIA EROSION AND SEDIMENT CONTROL HANDBOOK." MEASURES SPECIFICALLY IDENTIFIED ON THESE PLANS ARE LISTED BELOW.

6.2 CONSTRUCTION ENTRANCE (CE) AND CONSTRUCTION ROAD STABILIZATION (RCS): A CONSTRUCTION ENTRANCE IS PROVIDED AS SHOWN ON SHEET EC-1. THE CONTRACTOR SHALL ENSURE VEHICLES LEAVING THE WORK AREA ARE FREE OF EXCESS MUD, DIRT, AND DUST. VEHICLE WASH-DOWN PROVISIONS SHALL BE ADDED IF REQUIRED BY E&SC INSPECTOR. THE CONSTRUCTION ROAD STABILIZATION (CRS) CONSISTS OF THE TEMPORARY STABILIZATION OF ACCESS ROADS, AND ON-SITE PARKING AREAS WITH STONE IMMEDIATELY AFTER GRADING. THE PURPOSE OF THE CRS IS TO REDUCE THE EROSION OF TEMPORARY ROADBEDS BY CONSTRUCTION TRAFFIC DURING WET WEATHER AND REDUCE THE EROSION AND SUBSEQUENT RE-GRADING OF PERMANENT ROADBEDS BETWEEN THE TIME OF INITIAL GRADING AND FINAL STABILIZATION.

6.3 SILT FENCE (SF/SSF): SILT FENCE SHALL BE INSTALLED AS SHOWN ON THE EROSION AND SEDIMENT CONTROL PLAN AND IN CONFORMANCE WITH STD. AND SPEC. 3.05 – IT WILL INTERCEPT SILT LADEN RUNOFF BEFORE IT EXITS THE SITE. SILT FENCE INSTALLATION SHALL BE COORDINATED WITH AND INSPECTED BY THE EROSION AND SEDIMENT CONTROL INSPECTOR OR REPRESENTATIVE. IN SOME STEEPER AREAS OF THE PROJECT SITE "SUPER SILT FENCE," WHICH USES WIRE BACKING TO HANDLE HIGHER VELOCITIES AND FLOWS, MAY BE SPECIFIED.

6.4 TOPSOILING (TO): SHALL BE APPLIED TO ALL DISTURBED AREAS WHICH ARE TO RECEIVE PERMANENT SEEDING AS INDICATED ON THE EROSION AND SEDIMENT CONTROL PLAN AND SHALL BE APPLIED IN ACCORDANCE WITH THE STD. AND SPEC. 3.30. TOPSOILING PROVIDES A METHOD FOR PRESERVING AND RE-USING THE SURFACE LAYER OF SOIL, OFTEN ENRICHED IN ORGANIC MATTER, IN ORDER TO OBTAIN A MORE DESIRABLE PLANTING AND GROWTH MEDIUM.

6.5 TEMPORARY SEEDING / STABILIZATION (TS): SHALL BE APPLIED TO DENUDED AREAS WITHIN SEVEN (7) DAYS AFTER FINAL GRADE IS REACHED ON ANY PORTION OF THE SITE AND SHALL CONFORM TO STD. AND SPEC. 3.31. ADDITIONALLY, TEMPORARY SOIL STABILIZATION SHALL BE APPLIED WITHIN SEVEN (7) DAYS TO DENUDED AREAS THAT MAY NOT BE AT FINAL GRADE BUT WILL REMAIN DORMANT (UNDISTURBED) FOR LONGER THAN FOURTEEN (14) DAYS IN CONFORMANCE WITH STD. AND SPEC. 3.31.

6.6 PERMANENT SEEDING (PS): ALL DISTURBED AREAS BROUGHT TO FINAL GRADE THAT ARE NOT BUILT UPON (BUILDING, PAVEMENT, WALKS, ETC.) OR THAT ARE NOT LANDSCAPED SHALL BE SEEDED IN CONFORMANCE WITH STD. AND SPEC. 3.32. PERMANENT STABILIZATION SHALL BE APPLIED TO DENUDED AREAS WITHIN SEVEN (7) DAYS AFTER FINAL GRADE IS REACHED ON ANY PORTION OF THE SITE.

6.7 INLET PROTECTION (IP): SHALL BE INSTALLED AS SHOWN ON THE EROSION AND SEDIMENT CONTROL PLAN AND IN CONFORMANCE WITH STD. AND SPEC. 3.07. INLET PROTECTIONS ARE PROVIDED IN ORDER TO FILTER RUNOFF BEFORE IT ENTERS THE STORM DRAINAGE SYSTEM.

6.8 OUTLET PROTECTION (OP): SHALL BE INSTALLED AS SHOWN ON THE EROSION AND SEDIMENT CONTROL PLAN AND IN CONFORMANCE WITH STD. AND SPEC. 3.18. OUTLET PROTECTION IS AN ENERGY DISSIPATING DEVICE WHICH PROTECTS THE OUTLET AND REDUCES DOWNSTREAM EROSION BY REDUCING THE VELOCITY OF CONCENTRATED STORMWATER FLOWS.

7. MANAGEMENT STRATEGY AND SEQUENCE OF CONSTRUCTION:

7.1 CONSTRUCTION SHALL BE SEQUENCED SO LAND DISTURBING AND GRADING OPERATIONS CAN BEGIN AND END AS QUICKLY AS POSSIBLE. REFER TO THE "GENERAL SEQUENCE OF WORK" FOR ADDITIONAL INFORMATION.

7.2 THE LIMITS OF LAND DISTURBANCE SHALL BE CLEARLY MARKED PRIOR TO START OF WORK.

7.3 SEDIMENT TRAPPING AND PERIMETER MEASURES SHALL BE INSTALLED AS THE FIRST STEP IN THE GRADING OPERATION AND SHALL BE SEEDED AND MULCHED IMMEDIATELY FOLLOWING INSTALLATION.

7.4 TEMPORARY SEEDING (TS) OR OTHER STABILIZATION MEASURES SHALL BE PLACED IMMEDIATELY FOLLOWING GRADING.

7.5 THE PROJECT SUPERINTENDENT OR THE RESPONSIBLE LAND DISTURBER (RLD) SHALL BE DIRECTLY RESPONSIBLE TO ENSURE THE MEASURES SPECIFIED HEREIN ARE INSTALLED AND MAINTAINED AND THE SEQUENCE OF WORK IS FOLLOWED.

7.6 AFTER PERFORMANCE OF THE WORK OF THE PROJECT AND UPON ACHIEVING ADEQUATE STABILIZATION, THE TEMPORARY E&SC MEASURES WILL BE CLEANED UP AND REMOVED.

8. PERMANENT STABILIZATION / REMOVAL OF MEASURES:

8.1 AFTER THE INSTALLED EROSION AND SEDIMENTATION CONTROL DEVICES ARE FOUND TO BE FUNCTIONAL, THE CONTRACTOR SHALL IMMEDIATELY PROCEED WITH CLEARING, GRUBBING, AND PRELIMINARY GRADING OPERATIONS. PERMANENT OR TEMPORARY STABILIZATION SHALL BE APPLIED TO DENUDED AREAS WITHIN SEVEN (7) DAYS AFTER FINAL GRADE IS REACHED ON ANY PORTION OF THE SITE. TEMPORARY SOIL STABILIZATION SHALL BE APPLIED WITHIN SEVEN (7) DAYS TO DENUDED AREAS THAT MAY NOT BE AT FINAL GRADE BUT WILL REMAIN DORMANT (UNDISTURBED) FOR LONGER THAN FOURTEEN (14) DAYS. PERMANENT STABILIZATION SHALL BE APPLIED TO AREAS THAT ARE TO BE LEFT DORMANT FOR MORE THAN ONE (1) YEAR.

8.2 FOLLOWING THE COMPLETION OF DEVELOPMENT AND STABILIZATION OF ALL AREAS, AND IT HAS BEEN DETERMINED THAT EROSION OR SEDIMENTATION IS NO LONGER OCCURRING ON THE SITE OR AT ITS BOUNDARIES, AND DRAINAGE FLOWS ARE FUNCTIONING ACCORDING TO DESIGN, THE CONTRACTOR MAY THEN BEGIN TO REMOVE THE TEMPORARY EROSION AND SEDIMENT CONTROL DEVICES. THIS WORK SHALL BE DONE IN A CAREFUL, NEAT, AND ORGANIZED MANNER.

8.3 ALL TEMPORARY EROSION AND SEDIMENT CONTROL MEASURES SHALL BE REMOVED WITHIN 30 DAYS AFTER FINAL SITE STABILIZATION OR AFTER THE TEMPORARY MEASURES ARE NO LONGER NEEDED, UNLESS OTHERWISE AUTHORIZED BY THE LOCAL PROGRAM AUTHORITY. TRAPPED SEDIMENT SHALL BE CAREFULLY REMOVED OR UNIFORMLY SPREAD OVER THE AREA AND THE DISTURBED SOIL AREAS RESULTING FROM THE DISPOSITION OF TEMPORARY MEASURES SHALL BE PERMANENTLY STABILIZED TO PREVENT FURTHER EROSION AND SEDIMENTATION.

9. INSPECTION & MAINTENANCE REQUIREMENTS:

9.1 THE CONTRACTOR IS RESPONSIBLE FOR ADHERING TO ALL MAINTENANCE REQUIREMENTS OF THE EROSION AND SEDIMENT CONTROL MEASURES AS OUTLINED IN THE VIRGINIA EROSION AND SEDIMENT CONTROL HANDBOOK.

9.2 ALL EROSION AND SEDIMENT MEASURES WILL BE CHECKED DAILY AND AFTER EACH SIGNIFICANT RAINFALL. THE ITEMS LISTED BELOW WILL BE CHECKED IN ACCORDANCE WITH THE REQUIREMENTS FOR EACH PARTICULAR ITEM.

9.3 STD & SPEC 3.02 – TEMPORARY STONE CONSTRUCTION ENTRANCE (CE) – THE ENTRANCE SHALL BE MAINTAINED IN A CONDITION WHICH WILL PREVENT TRACKING OR FLOW OF MUD ONTO PUBLIC RIGHT-OF-WAY. THIS WILL REQUIRE PERIODIC TOP DRESSING WITH ADDITIONAL STONE OR THE WASHING AND REWORKING OF EXISTING STONE AS CONDITIONS DEMAND AND REPAIR AND/OR CLEANOUT OF ANY STRUCTURES USED TO TRAP SEDIMENT. ALL MATERIALS SPILLED, DROPPED, WASHED, OR TRACKED FROM VEHICLES ONTO ROADWAYS OR INTO STORM DRAINS MUST BE REMOVED IMMEDIATELY. THE USE OF WATER TRUCKS TO REMOVE MATERIALS DROPPED, WASHED, OR TRACKED ONTO ROADWAYS WILL NOT BE PERMITTED UNDER ANY CIRCUMSTANCES.

9.4 STD & SPEC 3.05 – SILT FENCE (SF): SILT FENCES SHALL BE INSPECTED IMMEDIATELY AFTER EACH RAINFALL AND AT LEAST DAILY DURING PROLONGED RAINFALL. ANY REQUIRED REPAIRS SHALL BE MADE IMMEDIATELY. CLOSE ATTENTION SHALL BE PAID TO THE REPAIR OF DAMAGED SILT FENCE RESULTING FROM END RUNS AND UNDERCUTTING. SHOULD THE FABRIC ON A SILT FENCE DECOMPOSE OR BECOME INEFFECTIVE PRIOR TO THE END OF THE EXPECTED USABLE LIFE AND THE BARRIER STILL BE NECESSARY, THE FABRIC SHALL BE REPLACED PROMPTLY. SEDIMENT DEPOSITS SHOULD BE REMOVED AFTER EACH STORM EVENT. THEY MUST BE REMOVED WHEN DEPOSITS REACH A DEPTH OF 6-INCHES. ANY SEDIMENT DEPOSITS REMAINING IN PLACE AFTER THE SILT FENCE IS NO LONGER REQUIRED SHALL BE DRESSED TO CONFORM TO THE EXISTING GRADE, PREPARED AND SEEDED.

9.5 STD & SPEC 3.07 – STORM DRAIN INLET PROTECTION (IP) – THE STRUCTURE SHALL BE INSPECTED AFTER EACH RAIN AND REPAIRS MADE AS NEEDED. SEDIMENT SHALL BE REMOVED AND THE TRAP RESTORED TO ITS ORIGINAL DIMENSIONS WHEN THE SEDIMENT HAS ACCUMULATED TO ONE HALF THE DESIGN DEPTH OF THE TRAP. REMOVED SEDIMENT SHALL BE DEPOSITED IN A SUITABLE AREA AND IN SUCH A MANNER THAT IT WILL NOT ERODE. STRUCTURES SHALL BE REMOVED AND THE AREA STABILIZED WHEN THE REMAINING DRAINAGE AREA HAS BEEN PROPERLY STABILIZED.

9.6 STD & SPEC 3.19 AND 3.20 – RIP-RAP (RR) AND ROCK CHECK DAMS (CD) – CHECK DAMS SHOULD BE CHECKED FOR SEDIMENT ACCUMULATION AFTER EACH RUNOFF-PRODUCING STORM EVENT. SEDIMENT SHOULD BE REMOVED WHEN IT REACHES ONE HALF OF THE ORIGINAL HEIGHT OF THE MEASURE. REGULAR INSPECTIONS SHOULD BE MADE TO INSURE THAT THE CENTER OF THE DAM IS LOWER THAN THE EDGES. EROSION CAUSED BY HIGH FLOWS AROUND THE EDGES OF THE DAM SHOULD BE CORRECTED IMMEDIATELY.

9.8 STD & SPEC 3.32 – PERMANENT SEEDING (PS) – IN GENERAL, A STAND OF VEGETATION CANNOT BE DETERMINED TO BE FULLY ESTABLISHED UNTIL IT HAS BEEN MAINTAINED FOR ONE FULL YEAR AFTER PLANTING. IRRIGATION – NEW SEEDING SHOULD BE SUPPLIED WITH ADEQUATE MOISTURE. SUPPLY WATER AS NEEDED, ESPECIALLY LATE IN THE SEASON, IN ABNORMALLY HOT OR DRY WEATHER, OR ON ADVERSE SITES. WATER APPLICATION RATES SHOULD BE CONTROLLED TO PREVENT EXCESSIVE RUNOFF. RE-SEEDING – INSPECT SEEDED AREAS FOR FAILURE AND MAKE NECESSARY REPAIRS AND RESEEDINGS WITHIN THE SAME SEASON, IF POSSIBLE. IF VEGETATIVE COVER IS INADEQUATE TO PREVENT RILL EROSION, OVER-SEED AND FERTILIZE IN ACCORDANCE WITH SOIL TEST RESULTS. IF A STAND HAS LESS THAN 40% COVER, RE-EVALUATE CHOICE OF PLANT MATERIALS AND QUANTITIES OF LIME AND FERTILIZER. THE SOIL MUST BE TESTED TO DETERMINE IF ACIDITY OR NUTRIENT IMBALANCES ARE RESPONSIBLE. RE-ESTABLISH THE STAND FOLLOWING SEEDBED PREPARATION AND SEEDING RECOMMENDATIONS. FERTILIZATION – COOL SEASON GRASSES SHOULD BEGIN TO BE FERTILIZED 90 DAYS AFTER PLANTING TO ENSURE PROPER STAND AND DENSITY. WARM SEASON FERTILIZATION SHOULD BEGIN AT 30 DAYS AFTER PLANTING. APPLY MAINTENANCE LEVELS OF FERTILIZER AS DETERMINED BY SOIL TEST. IN THE ABSENCE OF A SOIL TEST, FERTILIZATION SHOULD BE AS INDICATED ON THE SEED SCHEDULE.

10. STORMWATER MANAGEMENT

10.1 STORMWATER RUN-OFF FROM THE PROJECT SITE WILL BE COLLECTED BY NEW STORM DRAINAGE INLETS, CURB SLOTS AND FLUMES, OR OTHER DEVICES, CONVEYED BY PIPE OR CHANNEL, AND DISCHARGED IN A NON-EROSIVE MANNER IN TO THE EXISTING STORM DRAINAGE SYSTEM LOCATED ALONG THE PERIMETER OF THE SITE.

END OF EROSION & SEDIMENT CONTROL NARRATIVE

GENERAL SEQUENCE OF WORK:

1. GENERAL:

1.1 IN ORDER TO MINIMIZE THE POTENTIAL FOR SOIL EROSION AND SEDIMENTATION OF DOWNSTREAM WATERWAYS AND PROPERTIES, THE WORK OF THE PROJECT SHOULD BE STAGED AND EXECUTED GENERALLY CHRONOLOGICALLY IN ACCORDANCE WITH THE GENERAL SEQUENCE OF WORK OUTLINED BELOW.

1.2 THIS SEQUENCE OF WORK IS NOT INTENDED TO PROVIDE THE CONTRACTOR AND THE RESPONSIBLE LAND DISTURBER (RLD) WITH SPECIFIC DIRECTION REGARDING MEANS AND METHODS OF CONSTRUCTION NOR IS IT INTENDED TO ADDRESS EACH AND EVERY REQUIRED STEP TO COMPLY WITH THE INTENT OF THE EROSION AND SEDIMENT CONTROL PLAN.

1.3 THE CONTRACTOR SHOULD BE FAMILIAR WITH AND AWARE OF THE SEQUENCING PROVISIONS OF THE "VIRGINIA EROSION AND SEDIMENT CONTROL REGULATIONS" AND THOSE CONTAINED IN THE ROANOKE COUNTY "EROSION AND SEDIMENT CONTROL ORDINANCE." THE GENERAL SEQUENCE OF WORK MAY BE ALTERED UPON SUBMISSION AND APPROVAL OF WRITTEN AMENDMENTS OR APPROVED FIELD REVISIONS.

2. FLAG THE LIMITS OF LAND DISTURBANCE. STAKE THE LOCATION OF THE CONSTRUCTION ENTRANCE.

3. CONSTRUCTION ENTRANCE (CE):

3.1 WHERE SHOWN ON THE PLAN OR REQUIRED TO PREVENT SEDIMENTATION OF DOWNSTREAM OR ADJOINING PROPERTIES, INSTALL SILT FENCE DOWNSLOPE OF THE PROPOSED CONSTRUCTION ENTRANCE. CLEAR THE AREA AND / OR DEMOLISH EXISTING ASPHALT, SIDEWALK, CURB / CURB & GUTTER AS REQUIRED FOR THE CONSTRUCTION ENTRANCE (CE). IF AN EXISTING ENTRANCE IS TO BE USED, UTILIZE THE ENTRANCE TO BRING CONSTRUCTION EQUIPMENT ONTO THE SITE, BUT INSTALL CONSTRUCTION ENTRANCE PROVISIONS PRIOR TO STARTING MASS GRADING / EARTHWORK.

3.2 GRUBB THE AREA OF THE (CE) AND PLACE FILL MATERIAL OR CUT GRADE AS REQUIRED TO BRING THE (CE) TO AN ACCESSIBLE GRADE. INSTALL THE (CE) IN ACCORDANCE WITH THE DETAILS AND SPECIFICATIONS.

3.3 STABILIZE ANY DISTURBED AREAS ADJOINING THE (CE) WITH TEMPORARY SEEDING (TS).

4. PERIMETER MEASURES:

4.1 INSTALL SILT FENCE (SF) ALONG THE PERIMETER OF THE LAND DISTURBANCE LIMITS WHERE SHOWN ON SHEET EC-1 OR WHERE REQUIRED TO CONTROL RUNOFF. NOTE THAT SOME SILT FENCE MAY BE DESIGNATED "SUPER" SILT FENCE (SSF). INSTALL RIP-RAP FILTER (RR) OR CHECK DAM (CD) WHERE SILT FENCE CREATES A "LOW-POINT" OR MAY TRAP EXCESSIVE RUN-OFF.

4.2 IMMEDIATELY SEED/STABILIZE (TS) ANY AREAS DISTURBED BY THE INSTALLATION OF THE PERIMETER MEASURES AND ADJOINING DOWN-SLOPE DISTURBED AREAS.

4.3 UPON COMPLETION OF ABOVE TASKS CALL FOR INSPECTION OF THE INSTALLED MEASURES. MAKE ADJUSTMENTS AS NEEDED TO ENSURE COMPLIANCE WITH THE SPECIFICATIONS SHOWN ON THE PLANS AND MAKE ADJUSTMENTS AND/OR ADD ADDITIONAL MEASURES BASED ON INSPECTION BY E&SC INSPECTOR FINDINGS/RECOMMENDATIONS.

5. CLEAR VEGETATION FROM THE PROJECT WORK AREA. CONSIDER USING INCREMENTAL CLEARING (I.E. REMOVE VEGETATION ONLY AS WORK IS TO START IN A SPECIFIC AREA). REMOVE CLEARED VEGETATION FROM WORK SITE AS THE WORK PROGRESSES. BURNING OF CLEARED VEGETATION WILL NOT BE PERMITTED.

6. MASS GRADING:

6.1 BEGIN GRADING IN ACCORDANCE WITH THE CONTOURS AND LINES SHOWN ON THE PLANS.

6.2 WHERE PRESENT, STRIP TOPSOIL AND PLACE IN A STOCKPILE FOR RE-USE ON FINISHED GRADED AREAS.

6.3 IT IS ANTICIPATED THAT GRADING FOR THE NEW BUILDING (ADDITIONS) FOOTINGS AND FOUNDATION WILL BEGIN FIRST. PLACE AND COMPACT EXCAVATIONS IN ACCORDANCE WITH THE PLAN. STOCKPILE EXCESS SUITABLE MATERIAL FOR HAUL-OFF OR FOR USE IN BACKFILLING FOUNDATIONS.

6.4 IF SHOWN ON THE PLAN, CONSTRUCT RETAINING WALLS AS GRADE IS BROUGHT TO SUITABLE ELEVATION.

6.5 INSTALL STORM DRAINAGE SYSTEM AS SHOWN ON PLANS AS EARLY IN THE SEQUENCE AS POSSIBLE. INSTALL INLET PROTECTION (IP) AT END OF OPEN PIPES AND ON ALL INLETS AS THEY ARE INSTALLED. ENSURE DOWNSTREAM STORM DRAINAGE SYSTEM IS COMPLETE AND FUNCTIONING AS WORK PROGRESSES. INSTALL OUTLET PROTECTION (OP) AT THE OUTLET END OF OPEN PIPES AS THEY ARE INSTALLED.

6.6 SHAPE GRADE OF PARKING LOT AND ADJOINING AREA TO DRAIN TO NEW STORM DRAIN INLETS AND CONVEYANCE CHANNELS AS SOON AS PRACTICABLE. AS SOON AS THE SUBGRADE ELEVATION IS REACHED WITHIN THE PARKING LOT AND TRAVEL WAYS INSTALL PAVEMENT STONE BASE OR CONSTRUCTION ROAD STABILIZATION (CRS).

6.7 AS EXCAVATION PROGRESSES AND IS COMPLETED, PLACE THE SITE TO FINISHED GRADE AS SOON AS PRACTICAL. APPLY TEMPORARY SEEDING (TS), OR TOPSOIL (TO) AND PERMANENT SEEDING (PS), TO DISTURBED AREA AND CUT SLOPES THAT WILL REMAIN DORMANT FOR LONGER THAN FOURTEEN (14) DAYS AND/OR WHEN FINAL GRADE IS REACHED.

6.8 FOR PERMANENT STABILIZATION OF DISTURBED AREAS, APPLY TOPSOIL (TO), SEEDING (PS), AND MULCH (MU), AND IMMEDIATELY PLACE SOIL STABILIZATION BLANKET/MATTING (B/M) WHERE SHOWN.

6.9 REFER TO "BIORETENTION SYSTEM SEQUENCE OF CONSTRUCTION" ON SHEET C4.03 FOR ADDITIONAL INFORMATION. EXCAVATION OF THE BIORETENTION FILTER MAY BE SCHEDULED WITH THE ROUGH GRADING OF THE PROJECT TO PERMIT USE OF THE EXCAVATED MATERIAL AS FILL ELSEWHERE ON THE SITE; HOWEVER, THE BIORETENTION FILTER MUST NOT BE CONSTRUCTED OR PLACED IN SERVICE UNTIL THE CONTRIBUTING DRAINAGE AREA HAS BEEN STABILIZED. THE LOCATIONS OF INFILTRATION BIORETENTION FILTER SHOULD BE PROTECTED BY SILT FENCE OR CONSTRUCTION FENCING TO PREVENT SOIL COMPACTION BY HEAVY EQUIPMENT.

7. UTILITY INSTALLATION (STORM DRAINAGE, WATER, & SANITARY SEWER):

7.1 ONCE GRADING HAS REACHED SUB-GRADE LEVEL OR AS OTHERWISE STIPULATED HEREIN, BEGIN INSTALLATION OF NEW STORM DRAINAGE PIPING SYSTEM, CHANNELS, AND CULVERTS. INSTALL NEW STORM DRAINAGE SYSTEM PIPING FROM LOWEST POINT IN SYSTEM TO HIGHEST POINT IN SYSTEM. INSTALL INLET PROTECTION (IP) AT THE END OF OPEN PIPES AND AROUND EACH STORM DRAIN INLET AS IT BECOMES OPERATIONAL. OTHER UTILITY INSTALLATION REQUIREMENTS INCLUDE:

7.1.1 NO MORE THAN 200 LINEAR FEET OF TRENCH MAY BE OPENED AT ONE TIME.

7.1.2 EXCAVATED MATERIAL SHALL BE PLACED ON THE UPHILL SIDE OF TRENCHES.

7.1.3 EFFLUENT FROM DEWATERING OPERATIONS SHALL BE FILTERED OR PASSED THROUGH AN APPROVED SEDIMENT TRAPPING DEVICE, OR BOTH, AND DISCHARGED IN A MANNER THAT DOES NOT ADVERSELY AFFECT FLOWING STREAMS OR OFF-SITE PROPERTY.

7.1.4 MATERIAL USED FOR BACKFILLING TRENCHES SHALL BE PROPERLY COMPACTED IN ORDER TO MINIMIZE EROSION AND PROMOTE STABILIZATION.

7.1.5 COMPLY WITH ALL APPLICABLE SAFETY REGULATIONS REGARDING TRENCHING.

8. MAINTENANCE OF E&SC MEASURES:

9.1 ALL EROSION AND SEDIMENT MEASURES WILL BE CHECKED DAILY AND AFTER EACH MEASURABLE RAINFALL. THE CONTRACTOR IS RESPONSIBLE FOR ADHERING TO ALL MAINTENANCE REQUIREMENTS OF THE EROSION AND SEDIMENT CONTROL MEASURES AS OUTLINED IN THE VIRGINIA EROSION AND SEDIMENT CONTROL HANDBOOK AND THE E&SC NARRATIVE.

9. REMOVAL OF MEASURES:

9.1 PERMANENT VEGETATION SHALL NOT BE CONSIDERED ESTABLISHED UNTIL A GROUND COVER IS ACHIEVED THAT IS UNIFORM AND MATURE ENOUGH TO SURVIVE AND INHIBIT EROSION.

9.2 UPON STABILIZATION OF ALL DISTURBED SURFACES, CALL-FOR FINAL INSPECTIONS.

9.3 ALL TEMPORARY EROSION AND SEDIMENT CONTROL MEASURES SHALL BE REMOVED WITHIN 30 DAYS AFTER FINAL SITE STABILIZATION OR AFTER THE TEMPORARY MEASURES ARE NO LONGER NEEDED, UNLESS OTHERWISE AUTHORIZED BY THE E&SC INSPECTOR. TRAPPED SEDIMENT AND THE DISTURBED SOIL AREAS RESULTING FROM THE REMOVAL OF TEMPORARY MEASURES SHALL BE PERMANENTLY STABILIZED TO PREVENT FURTHER EROSION AND SEDIMENTATION. IF DEWATERING IS REQUIRED, WATER SHALL BE PUMPED TO AN APPROVED FILTERING DEVISE.

END OF GENERAL SEQUENCE OF WORK

ENTEROS DESIGN
314 EXCHANGE ALLEY
PETERSBURG, VA 23804
804.861.1200 P
804.861.1253 F

All ideas, designs, arrangements and plans indicated or represented by this drawing are property of ENTEROS DESIGN, PC; created, evolved and developed for the sole use of this project. These ideas, design arrangements and/or plans shall not be used by or disclosed to any person, firm or corporation for any purpose without written permission from ENTEROS DESIGN, PC. Written dimensions on these drawings shall have precedence over scaled dimensions. Contractors shall verify and be responsible for all dimensions and conditions on the job. The Architect must be notified of any variations from the dimensions and conditions shown on these drawings.
c 2015 ENTEROS DESIGN, PC

Mattern & Craig
ENGINEERS•SURVEYORS
701 FIRST STREET, S.W.
ROANOKE, VIRGINIA 24016
(540) 345-9342
FAX (540) 345-7691

WILLIAMSON ROAD LIBRARY
3837 Williamson Road, Roanoke, VA 24012

CONSTRUCTION DOCUMENTS

REVISIONS:

EROSION & SEDIMENT NARRATIVE

PROJ. NO.: 156003 DRAWN BY: ARB
04.13.16

COMMONWEALTH OF VIRGINIA
WM. THOMAS AUSTIN
Lic. No. 030907
4/13/16
PROFESSIONAL ENGINEER

C5.02

STATEMENT OF COMPLIANCE WITH VIRGINIA EROSION AND SEDIMENT CONTROL REGULATIONS – 9VAC25-840-40 – MINIMUM STANDARDS:

THE LAND-DISTURBING ACTIVITIES OF THIS PROJECT MUST COMPLY WITH THE 19 "MINIMUM STANDARDS" (MS) SPECIFIED IN SECTION 4VAC50-30-40 OF THE REGULATIONS (VIRGINIA EROSION AND SEDIMENT CONTROL REGULATIONS) THAT ARE APPLICABLE TO THE PROJECT. THIS SECTION PROVIDES A RECITATION OF THE FULL TEXT OF THE 19 MINIMUM STANDARDS AND FOLLOWS WITH A "METHOD OF COMPLIANCE" WITH EACH MINIMUM STANDARD. THESE EROSION AND SEDIMENT CONTROL PLANS WERE PREPARED IN A MANNER TO ENSURE COMPLIANCE WITH THE MINIMUM STANDARDS.

THE CONTRACTOR AND THE CERTIFIED RESPONSIBLE LAND DISTURBER (RLD) SHALL PERFORM THE WORK OF THE PROJECT IN THE MANNER STATED AND IN A MANNER AND SEQUENCE SUCH THAT THE INTENT AND REQUIREMENTS OF THE MINIMUM STANDARDS ARE MET. REFER TO THE STORMWATER POLLUTION PREVENTION PLAN (SWPPP) FOR ADDITIONAL INFORMATION.

MS-1: Permanent or temporary soil stabilization shall be applied to denuded areas within seven (7) days after final grade is reached on any portion of the site. Temporary soil stabilization shall be applied within seven (7) days to denuded areas that may not be at final grade but will remain dormant for longer than fourteen (14) days. Permanent stabilization shall be applied to areas that are to be left dormant for more than one year.

METHOD OF COMPLIANCE – PERMANENT SEEDING AND TEMPORARY SEEDING MEASURES ARE SHOWN AND SPECIFIED ON THE EROSION AND SEDIMENT CONTROL PLANS AND DETAILS. CONTRACTOR SHALL REFER TO SHEETS C5.01 AND C5.02 AS WELL AS THE NARRATIVE AND DETAILS FOR SEEDING REQUIREMENTS AND SCHEDULES.

MS-2: During construction of the project, soil stock piles and borrow areas shall be stabilized or protected with sediment trapping measures. The applicant is responsible for the temporary protection and permanent stabilization of all soil stockpiles on site as well as borrow areas and soil intentionally transported from the project site.

METHOD OF COMPLIANCE – IT IS ANTICIPATED THAT TOPSOIL, EXCESS EXCAVATION MATERIAL, AND/OR UN-SUITABLE MATERIAL WILL BE FOUND ON THE PROJECT SITE AND WILL NEED TO BE STOCKPILED AND / OR HAULED FROM THE SITE. THE LOCATION OF THE TEMPORARY STOCKPILE AND THE REQUIRED E&SC MEASURES ARE SHOWN ON SHEET C5.01. IF TOPSOIL, EXCESS EXCAVATION, OR UN-SUITABLE MATERIAL IS REMOVED FROM THE SITE, IT SHALL BE DISPOSED OF IN A LEGAL MANNER AND AT A SITE THAT IS DULY PERMITTED FOR LAND DISTURBANCE ACTIVITIES.

MS-3: A permanent vegetative cover shall be established on denuded areas not otherwise permanently stabilized. Permanent vegetation shall not be considered established until a ground cover is achieved that is uniform, mature enough to survive and will inhibit erosion.

METHOD OF COMPLIANCE – PERMANENT SEEDING (PS), ALONG WITH TOPSOILING (TO), AND MULCHING (MU) MEASURES ARE SHOWN AND SPECIFIED ON THE E&SC PLAN AND DETAIL SHEETS AS WELL AS THE NARRATIVE AND SEQUENCE OF WORK.

MS-4: Sediment basins and sediment traps, perimeter dikes, sediment barriers and other measures intended to trap sediment shall be constructed as a first step in any land-disturbing activity and shall be made functional before upslope land disturbance takes place.

METHOD OF COMPLIANCE – THESE PERIMETER SEDIMENT TRAPPING MEASURES ARE SHOWN ON THE E&SC PLAN SHEET AND ARE SPECIFIED TO BE INSTALLED PRIOR TO MAJOR LAND DISTURBANCE ACTIVITIES. REFER TO THE GENERAL NOTES, NARRATIVE, AND SEQUENCE OF WORK FOR ADDITIONAL INFORMATION AND REQUIREMENTS.

MS-5: Stabilization measures shall be applied to earthen structures such as dams, dikes and diversions immediately after installation.

METHOD OF COMPLIANCE – NOT APPLICABLE. NO EARTHEN PERIMETER CONTROL MEASURES ARE PROPOSED.

MS-6: Sediment traps and sediment basins shall be designed and constructed based upon the total drainage area to be served by the trap or basin.

a. The minimum storage capacity of a sediment trap shall be 134 cubic yards per acre of drainage area and the trap shall only control drainage areas less than three acres.

b. Surface runoff from disturbed areas that is comprised of flow from drainage areas greater than or equal to three acres shall be controlled by a sediment basin. The minimum storage capacity of a sediment basin shall be 134 cubic yards per acre of drainage area. The outfall system shall, at a minimum, maintain the structural integrity of the basin during a 25-year storm of 24-hour duration. Runoff coefficients used in runoff calculations shall correspond to a bare earth condition or those conditions expected to exist while the sediment basin is utilized.

METHOD OF COMPLIANCE – NOT APPLICABLE. NO SEDIMENT TRAP (ST) IS PROPOSED.

MS-7: Cut and fill slopes shall be designed and constructed in a manner that will minimize erosion. Slopes that are found to be eroding excessively within one year of permanent stabilization shall be provided with additional slope stabilizing measures until the problem is corrected.

METHOD OF COMPLIANCE: NO NEW CUT OR FILL SLOPES OR EXISTING SLOPES TO BE DENUDED GREATER THAN 6 FEET IN HEIGHT ARE ANTICIPATED.

MS-8: Concentrated runoff shall not flow down cut or fill slopes unless contained within an adequate temporary or permanent channel, flume or slope drain structure.

METHOD OF COMPLIANCE – NO NEW CUT OR FILL SLOPES GREATER THAN 6 FEET IN HEIGHT AND EXISTING DENUDED STEEP SLOPES THAT ARE TO BE DISTURBED ARE ANTICIPATED IN THIS PLAN.

MS-9: Whenever water seeps from a slope face, adequate drainage or other protection shall be provided.

METHOD OF COMPLIANCE – BASED ON A REVIEW OF AVAILABLE SUBSURFACE INVESTIGATION REPORTS, PUBLIC DATA, AND KNOWLEDGE OF THE GROUNDWATER CONDITIONS AT THE SITE, THIS CONDITION IS NOT ANTICIPATED DURING THIS PROJECT. IF ENCOUNTERED DURING CONSTRUCTION IT WILL BE ADDRESSED WITH PLAN REVISION.

MS-10: All storm sewer inlets that are made operable during construction shall be protected so that sediment-laden water cannot enter the conveyance system without first being filtered or otherwise treated to remove sediment.

METHOD OF COMPLIANCE – INLET PROTECTION (IP) DEVICES ARE SPECIFIED AND SHOWN ON THE E&SC PLAN SHEETS AND IN THE NARRATIVE. THE GENERAL WORK SEQUENCE SPECIFIES THE TIMING FOR INSTALLATION OF THESE MEASURES.

MS-11: Before newly constructed stormwater conveyance channels or pipes are made operational, adequate outlet protection and any required temporary or permanent channel lining shall be installed in both the conveyance channel and receiving channel.

METHOD OF COMPLIANCE – THE NEW STORMWATER CONVEYANCE SYSTEM(S) DISCHARGES DIRECTLY IN TO THE EXISTING STORM DRAINAGE SYSTEM. WHERE REQUIRED, OUTLET PROTECTION MEASURES ARE SPECIFIED AND DETAILED ON THE E&SC PLAN SHEETS. THE TIMING OF INSTALLING LININGS AND OUTLET PROTECTIONS IS SPECIFIED IN THE NARRATIVE AND SEQUENCE OF WORK.

MS-12: When work in a live watercourse is performed, precautions shall be taken to minimize encroachment, control sediment transport and stabilize the work area to the greatest extent possible during construction. Nonerodible material shall be used for the construction of causeways and cofferdams. Earthen fill may be used for these structures if armored by nonerodible cover materials.

METHOD OF COMPLIANCE – NOT APPLICABLE. NO WORK IS PROPOSED IN A LIVE WATERCOURSE.

MS-13: When a live watercourse must be crossed by construction vehicles more than twice in any six-month period, a temporary vehicular stream crossing constructed of nonerodible material shall be provided.

METHOD OF COMPLIANCE – NOT APPLICABLE. WORK DOES NOT INVOLVE THE CROSSING OF A LIVE WATERCOURSE.

MS-14: All applicable federal, state and local requirements pertaining to working in or crossing live watercourses shall be met.

METHOD OF COMPLIANCE – NOT APPLICABLE. WORK DOES NOT INVOLVE WORKING IN OR CROSSING OF A LIVE WATERCOURSE.

MS-15: The bed and banks of a watercourse shall be stabilized immediately after work in the watercourse is completed.

METHOD OF COMPLIANCE – NOT APPLICABLE. WORK DOES NOT INVOLVE WORKING IN OR CROSSING OF A LIVE WATERCOURSE.

MS-16: Underground utility lines shall be installed in accordance with the following standards in addition to other applicable criteria:

a. No more than 500 linear feet of trench may be opened at one time.

b. Excavated material shall be placed on the uphill side of trenches.

c. Effluent from dewatering operations shall be filtered or passed through an approved sediment trapping device, or both, and discharged in a manner that does not adversely affect flowing streams or off-site property.

d. Material used for backfilling trenches shall be properly compacted in order to minimize erosion and promote stabilization.

e. Restabilization shall be accomplished in accordance with this chapter.

f. Applicable safety requirements shall be complied with.

METHOD OF COMPLIANCE – SPECIFIC REQUIREMENTS TO ADDRESS THIS MINIMUM STANDARD ARE INCORPORATED IN TO AND IDENTIFIED IN THE SEQUENCE OF WORK AND THE E&SC NARRATIVE.

MS-17: Where construction vehicle access routes intersect paved or public roads, provisions shall be made to minimize the transport of sediment by vehicular tracking onto the paved surface. Where sediment is transported onto a paved or public road surface, the road surface shall be cleaned thoroughly at the end of each day. Sediment shall be removed from the roads by shoveling or sweeping and transported to a sediment control disposal area. Street washing shall be allowed only after sediment is removed in this manner. This provision shall apply to individual development lots as well as to larger land-disturbing activities.

METHOD OF COMPLIANCE – THE E&SC PLAN SHEETS INDICATE THE LOCATION OF THE PROPOSED CONSTRUCTION ENTRANCE (CE) AND THE SEQUENCE OF INSTALLATION IS SPECIFIED IN THE NARRATIVE AND GENERAL SEQUENCE OF WORK. ALL CONSTRUCTION VEHICLES SHALL ENTER AND LEAVE THE SITE AT THE SPECIFIED LOCATION.

MS-18: All temporary erosion and sediment control measures shall be removed within 30 days after final site stabilization or after the temporary measures are no longer needed, unless otherwise authorized by the VESCP authority. Trapped sediment and the disturbed soil areas resulting from the disposition of temporary measures shall be permanently stabilized to prevent further erosion and sedimentation.

METHOD OF COMPLIANCE – REFER TO NARRATIVE AND WORK SEQUENCE ON THE E&SC PLAN SHEETS AND THE GENERAL NOTES FOR STATED REQUIREMENTS REGARDING THE PROVISIONS OF REMOVAL OF E&SC MEASURES.

MS-19: Properties and waterways downstream from development sites shall be protected from sediment deposition, erosion and damage due to increases in volume, velocity and peak flow rate of stormwater runoff for the stated frequency storm of 24-hour duration in accordance with the following standards and criteria. Stream restoration and relocation projects that incorporate natural channel design concepts are not man-made channels and shall be exempt from any flow rate capacity and velocity requirements for natural or man-made channels:

a. Concentrated stormwater runoff leaving a development site shall be discharged directly into an adequate natural or man-made receiving channel, pipe or storm sewer system. For those sites where runoff is discharged into a pipe or pipe system, downstream stability analyses at the outfall of the pipe or pipe system shall be performed.

b. Adequacy of all channels and pipes shall be verified in the following manner:
(1) The applicant shall demonstrate that the total drainage area to the point of analysis within the channel is one hundred times greater than the contributing drainage area of the project in question; or
(2) (a) Natural channels shall be analyzed by the use of a two-year storm to verify that stormwater will not overtop channel banks nor cause erosion of channel bed or banks.
(b) All previously constructed man-made channels shall be analyzed by the use of a ten-year storm to verify that stormwater will not overtop its banks and by the use of a two-year storm to demonstrate that stormwater will not cause erosion of channel bed or banks; and
(c) Pipes and storm sewer systems shall be analyzed by the use of a ten-year storm to verify that stormwater will be contained within the pipe or system.

c. If existing natural receiving channels or previously constructed man-made channels or pipes are not adequate, the applicant shall:
(1) Improve the channels to a condition where a ten-year storm will not overtop the banks and a two-year storm will not cause erosion to the channel, the bed, or the banks; or
(2) Improve the pipe or pipe system to a condition where the ten-year storm is contained within the appurtenances;
(3) Develop a site design that will not cause the pre-development peak runoff rate from a two-year storm to increase when runoff outfalls into a natural channel or will not cause the pre-development peak runoff rate from a ten-year storm to increase when runoff outfalls into a man-made channel; or
(4) Provide a combination of channel improvement, stormwater detention or other measures which is satisfactory to the VESCP authority to prevent downstream erosion.

d. The applicant shall provide evidence of permission to make the improvements.

e. All hydrologic analyses shall be based on the existing watershed characteristics and the ultimate development condition of the subject project.

f. If the applicant chooses an option that includes stormwater detention, he shall obtain approval from the VESCP of a plan for maintenance of the detention facilities. The plan shall set forth the maintenance requirements of the facility and the person responsible for performing the maintenance.

g. Outfall from a detention facility shall be discharged to a receiving channel, and energy dissipators shall be placed at the outfall of all detention facilities as necessary to provide a stabilized transition from the facility to the receiving channel.

h. All on-site channels must be verified to be adequate.

i. Increased volumes of sheet flows that may cause erosion or sedimentation on adjacent property shall be diverted to a stable outlet, adequate channel, pipe or pipe system, or to a detention facility.

j. In applying these stormwater management criteria, individual lots or parcels in a residential, commercial or industrial development shall not be considered to be separate development projects. Instead, the development, as a whole, shall be considered to be a single development project. Hydrologic parameters that reflect the ultimate development condition shall be used in all engineering calculations.

k. All measures used to protect properties and waterways shall be employed in a manner which minimizes impacts on the physical, chemical and biological integrity of rivers, streams and other waters of the state.

l. Any plan approved prior to July 1, 2014, that provides for stormwater management that addresses any flow rate capacity and velocity requirements for natural or man-made channels shall satisfy the flow rate capacity and velocity requirements for natural or man-made channels if the practices are designed to (i) detain the water quality volume and to release it over 48 hours; (ii) detain and release over a 24-hour period the expected rainfall resulting from the one year, 24-hour storm; and (iii) reduce the allowable peak flow rate resulting from the 1.5, 2, and 10-year, 24-hour storms to a level that is less than or equal to the peak flow rate from the site assuming it was in a good forested condition, achieved through multiplication of the forested peak flow rate by a reduction factor that is equal to the runoff volume from the site when it was in a good forested condition divided by the runoff volume from the site in its proposed condition, and shall be exempt from any flow rate capacity and velocity requirements for natural or man-made channels as defined in any regulations promulgated pursuant to § 62.1-44.15:54 or 62.1-44.15:65 of the Act.

m. For plans approved on and after July 1, 2014, the flow rate capacity and velocity requirements of §62.1-44.15:52 A of the Act and this subsection shall be satisfied by compliance with water quantity requirements in the Stormwater Management Act (§62.1-44.15:24 et seq. of the Code of Virginia) and attendant regulations, unless such land-disturbing activities are in accordance with 9VAC25-870-48 of the Virginia Stormwater Management Program (VSMP) Regulations.

n. Compliance with the water quantity minimum standards set out in 9VAC25-870-66 of the Virginia Stormwater Management Program (VSMP) Regulations shall be deemed to satisfy the requirements of subdivision 19 of this subsection.

METHOD OF COMPLIANCE: THIS PROJECT SATISFIES THE REQUIREMENTS OF MS-19 BY DEMONSTRATING COMPLIANCE WITH THE WATER QUANTITY MINIMUM STANDARDS SET OUT IN 9VAC25-870-66 OF THE VIRGINIA STORMWATER MANAGEMENT PROGRAM (VSMP) REGULATIONS. SPECIFICALLY THE PROJECT COMPLIES WITH THE REQUIREMENTS OF 9VAC25-870-66 B.3. AND 9VAC25-870-66 C.2.B.

REFER TO THE STORMWATER MANAGEMENT PLAN AND COMPUTATION FOR ADDITIONAL INFORMATION.

END OF STATEMENT OF COMPLIANCE WITH VIRGINIA EROSION AND SEDIMENT CONTROL REGULATIONS – 9VAC25-840-40 – MINIMUM STANDARDS

M&C FORM #107

EROSION & SEDIMENT CONTROL COST SUMMARY

(FOR BONDING ESTIMATE PURPOSES ONLY)

PROJECT:	WILLIAMSON ROAD LIBRARY 3837 WILLIAMSON ROAD	COMM #:	3536
LOCATION:	ROANOKE, VA	DATE:	4/16/2016
BY:	MATTERN & CRAIG, INC.	CHKD BY:	WTA

VE&SCH STD. No.	VE&SCH SYMBOL	DESCRIPTION	UNIT	QTY	UNIT	TOTAL
3.02	CE	CONSTRUCTION ENTRANCE (CE)	EA	1	$1,500.00	$1,500
3.03	CRS	CONSTRUCTION ROAD STABILIZATION (CRS)	SY		$3.00	$0
3.04	TSB	STRAW BALE BARRIER	LF		$3.00	$0
3.05	SF	SILT FENCE (SF)	LF	640	$4.00	$2,560
3.05	SSF	SUPER SILT FENCE (SSF)	LF		$8.00	$0
3.06	BB	BRUSH BARRIER	LF		$2.00	$0
3.07	IP	INLET PROTECTION (IP)	EA	2	$150.00	$300
3.08	CIP	CULVERT INLET PROTECTION	EA	1	$250.00	$250
3.09	DD	DIVERSION DIKE (DD)	LF		$3.00	$0
3.09	DD/CD	DIVERSION DIKE - CHECK DAM (DD/CD)	LF		$6.00	$0
3.10	FD	TEMPORARY FILL DIVERSION	LF		$0.50	$0
3.11	RWD	TEMPORARY RIGHT-OF-WAY DIVERSION	LF		$3.00	$0
3.12	DV	DIVERSION	LF		$6.50	$0
3.13	ST	SEDIMENT TRAP (ST)	-		-	-
		- 1 ACRE DRAINAGE AREA	EA		$750.00	$0
		- 2 ACRE DRAINAGE AREA	EA		$1,500.00	$0
		- 3 ACRE DRAINAGE AREA	EA		$2,000.00	$0
3.14	SB	SEDIMENT BASIN (SB)	-		-	-
		- 3 ACRE DRAINAGE AREA	EA		$3,000.00	$0
		- 6 ACRE DRAINAGE AREA	EA		$6,000.00	$0
		- 15 ACRE DRAINAGE AREA	EA		$10,000.00	$0
3.15	TSD	TEMPORARY SLOPE DRAIN (TSD)	LF		$10.00	$0
	TP	TEMPORARY PIPE	LF		$15.00	$0
3.17	SCC	STORMWATER CONVEYANCE CHANNEL:	-		-	-
		- GRASS-LINED	SY		$10.00	$0
		- RIP RAP	SY		$30.00	$0
3.18	OP	OUTLET PROTECTION (OP)	EA		$300.00	$0
3.20	CD	ROCK CHECK DAM (CD)	EA		$50.00	$0
	SR	SURFACE RUFFENING (SR)	AC		$500.00	$0
3.31	TS	TEMPORARY SEEDING (TS)	AC	1.36	$1,800.00	$2,448
3.32	PS	PERMANENT SEEDING WITH TOPSOIL (TO) & MULCH (MU)	AC	0.60	$2,400.00	$1,440
3.36	B/M	SOIL STABILIZATION BLANKETS AND MATTINGS	SY		$2.00	$0
3.38	TP	TREE PRESERVATION & PROTECTION (TP)	LF	75	$3.60	$270
	CW	CONCRETE WASH-OUT STRUCTURE (CW)	EA	1	$450.00	$450
		MAINTENANCE (10%)	LS	1	$876.80	$877
		MAINTENANCE (EXIST. E&S MEASURES)	LS	0	$0.00	$0
				SUB-TOTAL =		$10,095
				10% CONTINGENCY =		$1,009
				GRAND TOTAL =		$11,104

ENTEROS DESIGN

314 EXCHANGE ALLEY
PETERSBURG, VA 23804

804.861.1200 P
804.861.1253 F

All ideas, designs, arrangements and plans indicated or represented by this drawing are property of ENTEROS DESIGN, PC; created, evolved and developed for the sole use of this project. These ideas, design arrangements and/or plans shall not be used by or disclosed to any person, firm or corporation for any purpose without written permission from ENTEROS DESIGN, PC. Written dimensions on these drawings shall have precedence over scaled dimensions. Contractors shall verify and be responsible for all dimensions and conditions on the job. The Architect must be notified of any variations from the dimensions and conditions shown on these drawings.
c 2015 ENTEROS DESIGN, PC

Mattern & Craig
ENGINEERS•SURVEYORS

701 FIRST STREET, S.W.
ROANOKE, VIRGINIA 24016
(540) 345-9342
FAX (540) 345-7691

WILLIAMSON ROAD LIBRARY

3837 Williamson Road, Roanoke, VA 24012

CONSTRUCTION DOCUMENTS

REVISIONS:

EROSION & SEDIMENT - MS - 19 COMPLIANCE

PROJ. NO.: 156003 DRAWN BY: ARB
04.13.16

COMMONWEALTH OF VIRGINIA
WM. THOMAS AUSTIN
Lic. No. 030907
4/13/16
PROFESSIONAL ENGINEER

C5.03

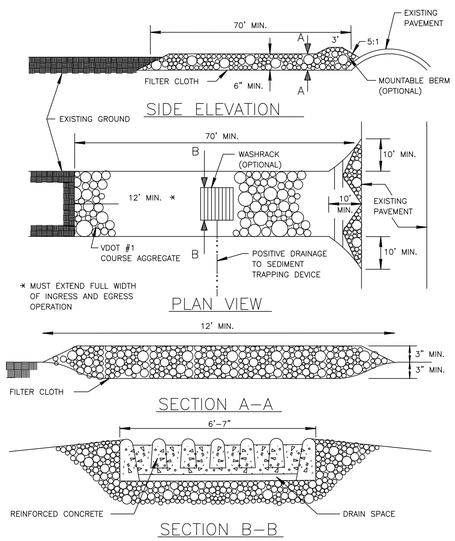

STONE CONSTRUCTION ENTRANCE (CE)

(STD. & SPEC. 3.02)

CONSTRUCTION OF A SILT FENCE (WITHOUT WIRE SUPPORT)

1. SET THE STAKES.
2. EXCAVATE A 4"X 4" TRENCH UPSLOPE ALONG THE LINE OF STAKES.
3. STAPLE FILTER MATERIAL TO STAKES AND EXTEND IT INTO THE TRENCH.
4. BACKFILL AND COMPACT THE EXCAVATED SOIL.

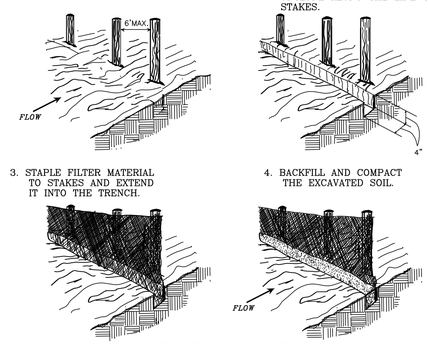

SHEET FLOW INSTALLATION
(PERSPECTIVE VIEW)

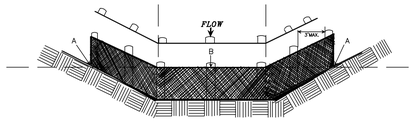

POINTS A SHOULD BE HIGHER THAN POINT B.

DRAINAGEWAY INSTALLATION
(FRONT ELEVATION)

SILT FENCE (SF)

(STD. & SPEC. 3.05)

SILT FENCE DROP INLET PROTECTION

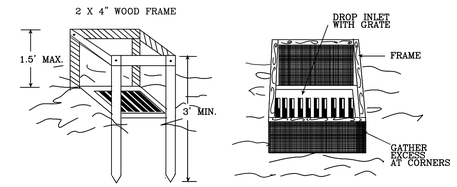

PERSPECTIVE VIEWS

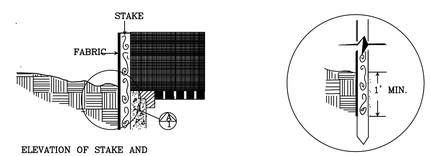

ELEVATION OF STAKE AND FABRIC ORIENTATION

DETAIL A

SPECIFIC APPLICATION

THIS METHOD OF INLET PROTECTION IS APPLICABLE WHERE THE INLET DRAINS A RELATIVELY FLAT AREA (SLOPE NO GREATER THAN 5%) WHERE THE INLET SHEET OR OVERLAND FLOWS (NOT EXCEEDING 1 C.F.S.) ARE TYPICAL. THE METHOD SHALL NOT APPLY TO INLETS RECEIVING CONCENTRATED FLOWS, SUCH AS IN STREET OR HIGHWAY MEDIANS.

STORM DRAIN INLET PROTECTION (IP)

(STD. & SPEC. 3.07–1)

TABLE 3.35-A

ORGANIC MULCH MATERIALS AND APPLICATION RATES

MULCHES:	RATES: Per Acre	RATES: Per 1000 sq. ft.	NOTES:
Straw or Hay	1½ - 2 tons (Minimum 2 tons for winter cover)	70 - 90 lbs.	Free from weeds and coarse matter. Must be anchored. Spread with mulch blower or by hand.
Fiber Mulch	Minimum 1500 lbs.	35 lbs.	Do not use as mulch for winter cover or during hot, dry periods.* Apply as slurry.
Corn Stalks	4 - 6 tons	185 - 275 lbs.	Cut or shredded in 4-6" lengths. Air-dried. Do not use in fine turf areas. Apply with mulch blower or by hand.
Wood Chips	4 - 6 tons	185 - 275 lbs.	Free of coarse matter. Air-dried. Treat with 12 lbs nitrogen per ton. Do not use in fine turf areas. Apply with mulch blower, chip handler, or by hand.
Bark Chips or Shredded Bark	50 - 70 cu. yds.	1-2 cu. yds.	Free of coarse matter. Air-dried. Do not use in fine turf areas. Apply with mulch blower, chip handler, or by hand.

* When fiber mulch is the only available mulch during periods when straw should be used, apply at a minimum rate of 2000 lbs./ac. or 45 lbs./1000 sq. ft.

MULCHING (MU)

(STD. & SPEC. 3.35)

TEMPORARY SEEDING MIXTURE:

THE SEEDING INFORMATION PROVIDED BELOW IS FOR GENERAL COMPLIANCE WITH EROSION & SEDIMENT CONTROL REQUIREMENTS. REFER TO PROJECT SPECIFICATIONS FOR ADDITIONAL TECHNICAL REQUIREMENTS.

FERTILIZER: SHALL MEET REQUIREMENTS OF FEDERAL SPECIFICATION 0 F 241. PROVIDE FERTILIZER THAT IS COMPLETE, INORGANIC, UNIFORM IN COMPOSITION, AND SUITABLE FOR APPLICATION WITH APPROVED EQUIPMENT. PROPORTIONS OF FERTILIZER NUTRIENTS SHALL BE THE FOLLOWING:

10 LBS. OF ACTUAL NITROGEN
10 LBS. OF ACTUAL PHOSPHATE
10 LBS. OF ACTUAL POTASH

TEMPORARY SEED MIXTURE: SHALL HAVE THE FOLLOWING CHARACTERISTICS:

SEEDING DATE	SPECIES	PERCENTAGES (MINIMUM) WGT.	PURITY	GERM.	SEEDING RATE LBS. PER ACRE
02/15–03/30	OATS	100	98	85	96
05/01–08/31	MILLET	100	98	80	40
09/01–11/15	RYE	100	96	85	140

LIME: SHALL BE GROUND AGRICULTURAL GRADE LIMESTONE CONTAINING NOT LESS THAN 85 PERCENT CALCIUM AND MAGNESIUM CARBONATES. FINENESS SHALL BE SUCH THAT 100 PERCENT WILL PASS A NO. 20 SIEVE, AND NOT LESS THAN 50 PERCENT WILL PASS A NO. 100 SIEVE. BURNT LIME OR HYDRATED LIME MAY BE SUBSTITUTED IN EQUIVALENT CARBONATES, IF REQUESTED.

MULCH: TYPE I MULCH SHALL BE CURLEX BLANKET EROSION CONTROL FABRIC BLANKET. THE FABRIC SHALL BE MANUFACTURED OF MATERIALS WHICH DEGRADE IN 6 TO 8 MONTHS UNDER OUTDOOR EXPOSURE. TYPE II MULCH COMPOSED OF THRESHED STRAW OF CEREAL GRAIN, PINE NEEDLES, OR WOOD FIBER SHALL BE FREE OF OBJECTIONABLE WEED SEEDS OR OTHER HARMFUL MATERIAL.

BINDER: SYNTHETIC MULCH BINDER FOR USE WITH TYPE II MULCH: CURASOL, DCA 70, PETROSET, OR TERRA TACK.

TEMPORARY SEEDING MIXTURE (TS)

(STD. & SPEC. 3.31)

PERMANENT SEEDING MIXTURE:

THE SEEDING INFORMATION PROVIDED BELOW IS FOR GENERAL COMPLIANCE WITH EROSION & SEDIMENT CONTROL REQUIREMENTS. REFER TO PROJECT SPECIFICATIONS FOR ADDITIONAL TECHNICAL REQUIREMENTS.

LIME: AS REQUIRED BY SOIL TEST. AGRICULTURAL LIMESTONE CONTAINING MINIMUM OF 85 PERCENT CARBONATES. MINIMUM GRADATION: 100 PERCENT PASSING A 10 MESH SIEVE; 98 PERCENT A 20 MESH SIEVE; 55 PERCENT A 60 MESH SIEVE; AND 40 PERCENT A 10 MESH SIEVE.

FERTILIZER: SHALL BE GRANULAR, OR PELLETED; COMPLETE COMMERCIAL TYPE WITH 50 PERCENT OF THE NITROGEN IN SLOWLY AVAILABLE FORM. ALL FERTILIZER SHALL BE A COMMERCIAL BALANCED FORMULA WITH AT BEST 25 PERCENT ORGANIC MATERIAL, AND SHALL CONFORM TO APPLICABLE STATE FERTILIZER LAWS. IT SHALL BE UNIFORM IN COMPOSITION, IN GRANULAR FORM DRY AND FREE–FLOWING. FOR ALL GRASS AND LAWN AREAS IT SHALL HAVE A MINIMUM GUARANTEED ANALYSIS OF 15 PERCENT NITROGEN, 30 PERCENT PHOSPHORUS, AND 15 PERCENT POTASH.

SEED: ALL PERMANENT GRASS SEED SHALL BE MANUFACTURED BY A SEED COMPANY THAT CAN GUARANTEE ALL SEED SHALL BE FREE OF NOXIOUS WEED SEEDS, CLEANED GRADE A RECENT CROP SEED. SEED COMPANY SHALL PROVIDE GUARANTEED GERMINATION OF 80 PERCENT.

SEED MIXTURE SHALL CONSIST OF (PROPORTIONED BY WEIGHT):

KENTUCKY BLUEGRASS (MIX OF 3 VARIETIES) 25%

TURF TYPE TALL FESCUE (REBEL 3D, TITAN 2, SHENANDOAH, FINELAWN 88, ANTHEM) 75%

APPLICATION: SEEDING SHALL BE APPLIED BETWEEN MARCH 1 AND MAY 15, OR AUGUST 16 AND OCTOBER 31. CAST SEEDS AT 4 POUNDS PER THOUSAND SQUARE FEET.

MULCH: SHALL BE CLEAN WHEAT OR BARLEY STRAW, FREE FROM NOXIOUS WEED SEED AND OTHER HARMFUL MATERIAL. COMMERCIAL PRODUCTS MAY BE USED WITH APPROVAL.

BINDER: SHALL BE FIBER MULCH BASED TACK BINDER SUCH AS "ENVIRO–BLEND" BY CONWED OR EQUAL. APPLY AT 25 LBS. PER THOUSAND SQUARE FEET ACCORDING TO MANUFACTURER'S RECOMMENDATIONS.

NOTE: REFER TO CHAPTER 5.11 OF THE "CITY OF ROANOKE RIGHT OF WAY EXCAVATION AND RESTORATION STANDARDS" FOR TOPSOIL AND SEEDING REQUIREMENTS WITHIN THE RIGHT OF WAY.

PERMANENT SEEDING MIXTURE (PS)

(STD. & SPEC. 3.32)

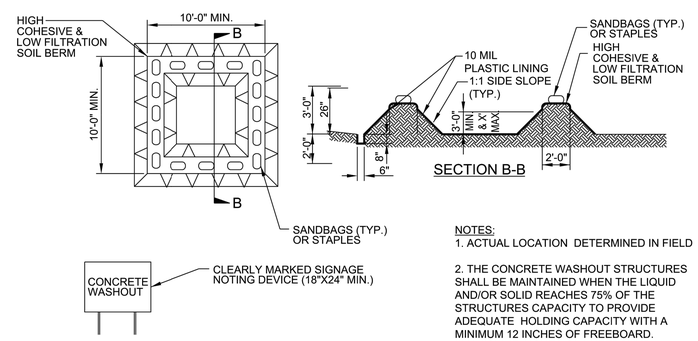

NOTES:
1. ACTUAL LOCATION DETERMINED IN FIELD

2. THE CONCRETE WASHOUT STRUCTURES SHALL BE MAINTAINED WHEN THE LIQUID AND/OR SOLID REACHES 75% OF THE STRUCTURES CAPACITY TO PROVIDE ADEQUATE HOLDING CAPACITY WITH A MINIMUM 12 INCHES OF FREEBOARD.

3.CONCRETE WASHOUT STRUCTURE NEEDS TO BE CLEARY MARKED WITH SIGNAGE NOTING DEVICE.

ABOVE GRADE WASHOUT STRUCTURE (CW)

CITY PLAN NO.: CPXXXXXX

ENTEROS DESIGN
314 EXCHANGE ALLEY
PETERSBURG, VA 23804
804.861.1200 P
804.861.1253 F

All ideas, designs, arrangements and plans indicated or represented by this drawing are property of ENTEROS DESIGN, PC; created, evolved and developed for the sole use of this project. These ideas, design arrangements and/or plans shall not be used by or disclosed to any person, firm or corporation for any purpose without written permission from ENTEROS DESIGN, PC. Written dimensions on these drawings shall have precedence over scaled dimensions. Contractors shall verify and be responsible for all dimensions and conditions on the job. The Architect must be notified of any variations from the dimensions and conditions shown on these drawings. c 2015 ENTEROS DESIGN, PC

Mattern & Craig ENGINEERS•SURVEYORS
701 FIRST STREET, S.W.
ROANOKE, VIRGINIA 24016
(540) 345–9342
FAX (540) 345–7691

WILLIAMSON ROAD LIBRARY
3837 Williamson Road, Roanoke, VA 24012

CONSTRUCTION DOCUMENTS

REVISIONS:

EROSION & SEDIMENT - DETAILS

PROJ. NO.: 156003 DRAWN BY: ARB
04.13.16

COMMONWEALTH OF VIRGINIA
WM. THOMAS AUSTIN
Lic. No. 030907
4/13/16
PROFESSIONAL ENGINEER

C5.04

TREE CANOPY REQUIREMENTS TABULATIONS:

OVERALL TREE CANOPY REQUIREMENTS (SEC 36.2–644):

MINIMUM TREE CANOPY REQUIRED (SEC. 36.2–328) = 10–PERCENT OF LOT AREA
DETERMINED TO BE 10–PERCENT OF DEVELOPED AREA)
- DEVELOPED AREA 1.35 ACRES (58,806 S.F.)
- 10% OF DEVELOPED AREA = 5,881 S.F.

PROVIDED TREE CANOPY:
LARGE TREES:
- 3 QP (WILLOW OAK) @ 254 SF/EA = 762 SF
- 7 AR (RED MAPLE) @ 314 SF/EA = 2,198 SF

SMALL TREES:
- 6 CC (EASTERN REDBUD) @ 177 SF/EA = 1,062 SF
- 6 AG (SERVICEBERRY) @ 201 SF/EA = 1,206 SF
- 10 IEB (EMILY BRUNER HOLLY) @ 38 SF/EA = 380 SF

EXISTING TO REMAIN:
SMALL TREES:
- 2 CC (EASTERN REDBUD) @ 177 SF/EA = 354 SF

TOTAL = 5,962 S.F. (10.14–PERCENT)

PARKING AREA LANDSCAPING (SEC. 36.2–648):

REQUIRED:

STREET FRONTAGE BUFFER:
- 8–FOOT DEEP YARD WITH DECIDUOUS TREES AND EVERGREEN SHRUBS
- SMALL DECIDUOUS TREES SHALL BE SPACED AT 15–FT. MIN. TO 30–FT. MAX.
- LARGE DECIDUOUS TREES SHALL BE SPACED AT 20–FT. MIN. TO 40–FT. MAX.
- SHRUBS SHALL BE SPACED AT 2–FT. MIN. TO 3–FT. MAX. AND CONTAINED WITHIN A 3–FT. WIDE PLANTING STRIP.

TREE CANOPY REQUIRED:
- FOR 21 OR MORE PARKING SPACES = 20–PERCENT (TABLE 648–1)
- PROPOSED PARKING AREA = 20,465 S.F. (0.4698 ACRES)
- REQUIRED PARKING AREA TREE CANOPY (20–PERCENT) = 4,093 S.F.

PROVIDED:
PROVIDED IN "STREET FRONTAGE BUFFER":
- 6–AG (SERVICEBERRY) @ 201 SF/EA = 1,206 SF
- SUB–TOTAL = 1,206 SF

PROVIDED IN "INTERIOR OF PARKING AREA":
- 3–QP (WILLOW OAK) @ 254 SF/EA = 762 SF
- 6–CC (EASTERN REDBUD) @ 177 SF/EA = 1,062 SF
- SUB–TOTAL = 1,824 SF

PROVIDED IN "PERIMETER OF PARKING AREA":
- 7–AR (RED MAPLE) @ 314 SF/EA = 2,198 SF
- SUB–TOTAL = 2,198 SF

TOTAL = 5,228 S.F. (25.6–PERCENT)

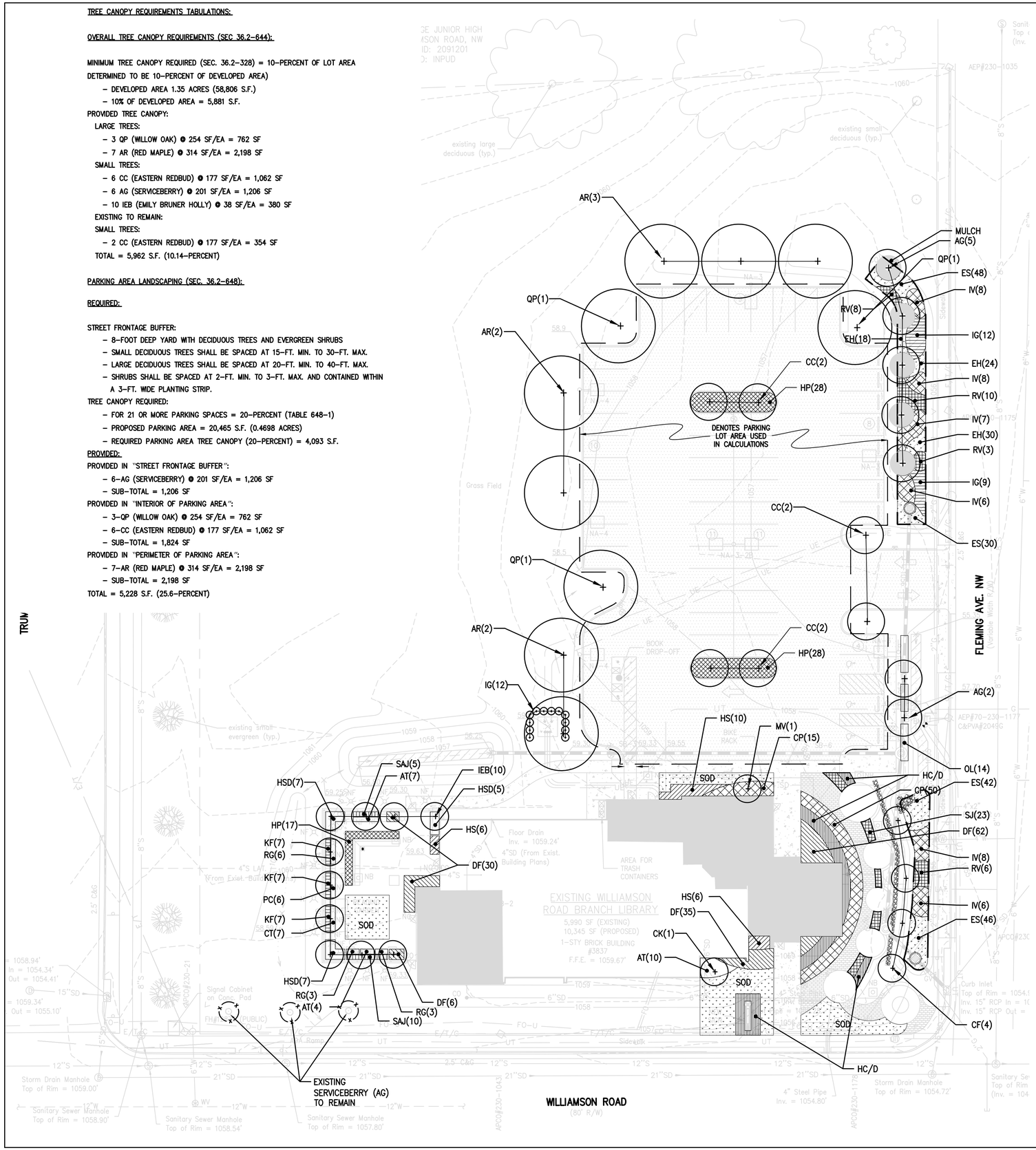

PLANTING SCHEDULE								
KEY	COMMON NAME	BOTANICAL NAME	SIZE	QUANTITY	SPACING	CANOPY PROVIDED (SF/EA)	TOTAL CANOPY (SF)	COMMENT CODE
LARGE TREES:								
QP	Willow Oak	Quercus phellos	2" CAL.	3	AS SHOWN	254	762	
AR	Red Maple	Acer Rubrum "October Glory"	2" CAL.	7	AS SHOWN	314	2,198	
SMALL TREES:								
CC	Eastern Redbud	Cercis canadensis	6'–7' HGT.	6	AS SHOWN	177	1,062	(1)
AG	Serviceberry	Amelanchier grandiflora	6'–7' HGT.	7	AS SHOWN	201	1,407	(1)
IEB	Emily Bruner Holly	Ilex x "Emily Bruner"	7'–8' HGT.	10	AS SHOWN	38	380	(2)
CF	Dogwood	Cornus florida	6'–7' HGT.	4	AS SHOWN	177	708	
CK	Kousa Dogwood	Cornus kousa	6'–7' HGT.	1	AS SHOWN	177	177	
MV	Sweetbay	Magnolia virginiana	6'–8' HGT.	1	AS SHOWN	38	38	
SHRUBS:								
OL	Otto Luken Laurel	Prunus l "Otto Luken"	3 gal	14	3'	N/A	N/A	
HSD	Hydrangea "Sikes Dwarf"	Hydrangea "Sikes Dwarf"	3 gal	19	3'	N/A	N/A	
CP	Dwarf Barberry	Berberis thun. "Crimson Pygmy"	3 gal	65	3'	N/A	N/A	
SJ	Spirea	Spirea japonica "Little Princess"	3 gal	23	3'	N/A	N/A	
IG	Shamrock Holly	Ilex glabra "shamrock"	3 gal	33	3'	N/A	N/A	
IV	Sweetspire	Itea virginica "Henry's Garnet"	3 gal	43	3'	N/A	N/A	
RV	Swamp Azalea	Rhododendron viscosum	3 gal	27	3'	N/A	N/A	
GROUNDCOVER / PERENNIALS:								
HP	Dwarf St John's wort	Hypericum pallens	1 gal	73	3'	N/A	N/A	
SAJ	Sedum	Sedum "Autumn Joy"	1 gal	15	24"	N/A	N/A	
DF	Dwarf Fountain Grass	Pennisetum "Hamelin"	1 gal	133	24"	N/A	N/A	
KF	Karl Foerster Grass	Calamagrostis "Karl Foerster"	1 gal	21	24"	N/A	N/A	
PC	Purple Coneflower	Echinacea purpurea	1 gal	8	18"	N/A	N/A	
CT	Coreopsis	Coreopsis v. "Moonbeam"	1 gal	7	18"	N/A	N/A	
AT	Aster daley	Aster "Triumph"	1 gal	21	18"	N/A	N/A	
RG	Black Eyed Susan	Rudbeckia "Goldsturm"	1 gal	12	18"	N/A	N/A	
HS	Hosta	Hosta sieboldiana "Elegans"	1 gal	22	30"	N/A	N/A	
HC	Daylily	Hemerocallis "Stella de Oro"	1 gal	120	18"	N/A	N/A	
DF	Daffodil	Narcissus sp	BULB	400	12"	N/A	N/A	
EH	Bottlebrush Grass	Elymus hystrix	TRAY	72	12"	N/A	N/A	
ES	Purple Love Grass	Eragrostis spectabilis	TRAY	166	12"	N/A	N/A	
					TOTAL CANOPY PROVIDED:		6,732	

COMMENTS:
(1) MULTI–STEM
(2) TREE FORM / MULTI–STEM

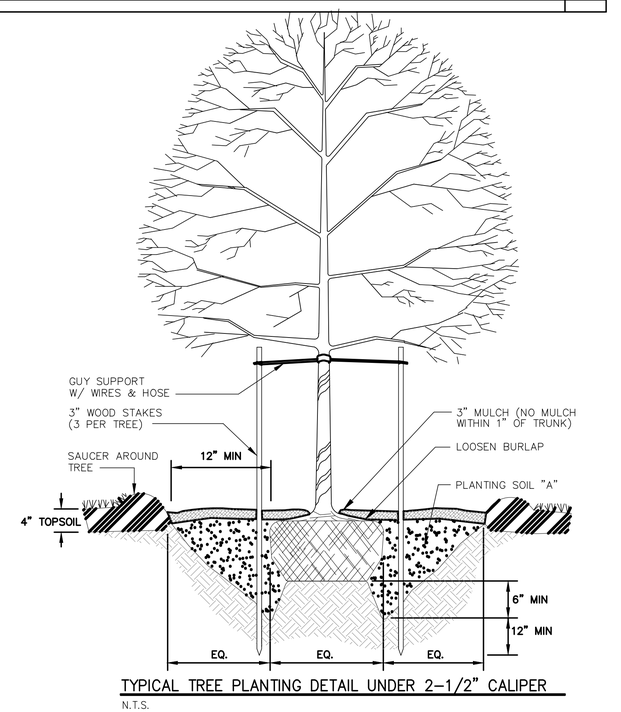

TYPICAL TREE PLANTING DETAIL UNDER 2–1/2" CALIPER
N.T.S.

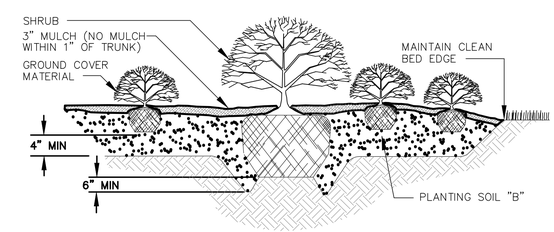

TYPICAL GROUND COVER & SHRUB BED DETAIL
N.T.S.

CITY PLAN NO.: CPXXXXXX

0 10' 20' 40'
SCALE: 1" = 20'

ENTEROS DESIGN
314 EXCHANGE ALLEY
PETERSBURG, VA 23804
804.861.1200 P
804.861.1253 F

All ideas, designs, arrangements and plans indicated or represented by this drawing are property of ENTEROS DESIGN, PC; created, evolved and developed for the sole use of this project. These ideas, design arrangements and/or plans shall not be used by or disclosed to any person, firm or corporation for any purpose without written permission from ENTEROS DESIGN, PC. Written dimensions on these drawings shall have precedence over scaled dimensions. Contractors shall verify and be responsible for all dimensions and conditions on the job. The Architect must be notified of any variations from the dimensions and conditions shown on these drawings. c 2015 ENTEROS DESIGN, PC

Mattern & Craig
ENGINEERS•SURVEYORS
701 FIRST STREET, S.W.
ROANOKE, VIRGINIA 24016
(540) 345–9342
FAX (540) 345–7691

WILLIAMSON ROAD LIBRARY
3837 Williamson Road, Roanoke, VA 24012

CONSTRUCTION DOCUMENTS

REVISIONS:

LANDSCAPE PLAN

PROJ. NO.: 156003 DRAWN BY: ARB
04.13.16

COMMONWEALTH OF VIRGINIA
WM. THOMAS AUSTIN
Lic. No. 030907
4/13/16
PROFESSIONAL ENGINEER

C6.01

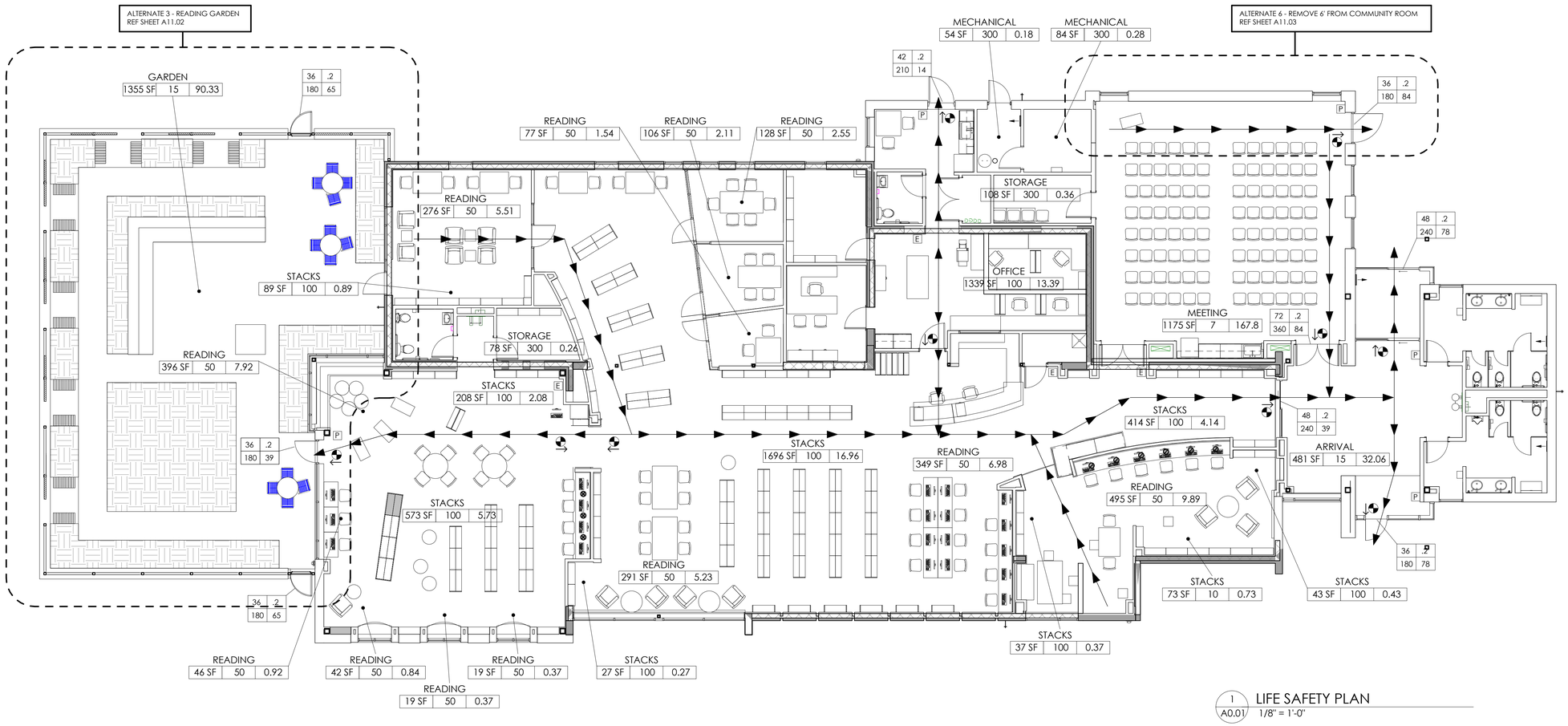

1 A0.01 LIFE SAFETY PLAN
1/8" = 1'-0"

FIRE PROTECTION LEGEND

NOTE: SEE ELEC. DRAWINGS FOR FIRE ALARM LOCATIONS

PATH OF EGRESS

EXIT SIGN

FIRE ALARM PULL — P

PORTABLE FIRE EXTINGUISHER — E

ROOM OCCUPANCY TAG

ASSEMBLY — ROOM NAME

SF | # | # — NUMBER OF OCCUPANTS; OCCUPANCY FACTOR; TOTAL SQUARE FOOTAGE

EGRESS TAG

CLEAR DOOR WIDTH

| # — FACTOR

| # — ACTUAL OCCUPANTS; ALLOWABLE OCCUPANTS

CODE INFORMATION

ALL WORK SHALL CONFORM TO ALL APPLICABLE CODE STANDARDS AND GOVERNING AUTHORITIES INCLUDING BUT NOT LIMITED TO:

BUILDING:	2012 INTERNATIONAL BUILDING CODE
FIRE PREVENTION:	2012 INTERNATIONAL FIRE CODE (IFC)
MECHANICAL:	2012 INTERNATIONAL MECHANICAL CODE (IMC)
PLUMBING:	2012 INTERNATIONAL PLUMBING CODE
ELECTRICAL:	2012 INTERNATIONAL ELECTRICAL CODE (NFPA 70)
ENERGY:	2012 INTERNATIONAL ENERGY CONSERVATION CODE (IECC)
STATE:	2012 VIRGINIA UNIFORM STATEWIDE BUILDING CODE

LIFE SAFETY NOTES

BUILDING DATA

CLASSIFICATION:	III
USE GROUP:	A3
CONSTRUCTION TYPE:	IIB (unprotected non-combustible)
AUTOMATIC SPRINKLER SYSTEM:	NO
FIRE ALARM SYSTEM:	YES
ALLOWABLE HEIGHT:	2 STORY
ALLOWABLE AREA:	9,500 GSF 16,625 w/ frontage modification Aa = At[1+If+Is] 16,625 = 9500(1+.75+0)
ACTUAL HEIGHT:	1 STORY, 20'-4"
ACTUAL AREA:	10,384 GSF

BUILDING OCCUPANT LOAD (IBC 1004.1.1)

BUILDING TOTAL CALCULATED OCCUPANTS:

OCC. TYPE	FACTOR	AREA	OCC.
LIBRARY READING	1:50 N	2,244	45
LIBRARY STACKS	1:100 G	3,160	32
ASSEMBLY (MEETING ROOM)	1:7 N	1,175	168
ASSEMBLY (ARRIVAL)	1:15 N	481	33
OFFICE	1:100 G	1,339	14
STORAGE/MECH	1:300 G	324	2
		TOTAL:	**294**
CHILDRENS GARDEN (ALTERNATE 2)	1:15 N	1,355	91

PLUMBING FIXTURES (IBC 2902) (IPC 403) (IPC 419.2)

TOTAL OCCUPANTS **294**

TOTAL FIXTURES	FIXTURES REQUIRED:	FIXTURES PROVIDED:
WC TOTAL:		
MEN	1.18 (1/125)	3 (2 TOILET, 1 URINAL)
WOMEN	2.26 (1/65)	3
LAVATORIES:		
MEN	0.74 (1/200)	2
WOMEN	0.74 (1/200)	2
UNISEX STAFF		1 TOILET 1 SINK
UNISEX FAMILY		2 TOILET 1 SINK
DRINKING FOUNTAIN:	1	2
SERVICE SINK:	1	1

EGRESS REQUIREMENTS (IBC CHAPTER 10)

EXITS	REQ'D	PROVIDED
1ST FLOOR	2	5

EXIT ACCESS TRAVEL DISTANCE:	200 FT
COMMON PATH:	75 FT
MAX DEAD END:	20 FT
EGRESS WIDTH:	0.3"/OCC (STAIRS) (IBC 1005.1) 0.2"/OCC. (DOORS, RAMPS, CORRIDORS)

FIRE-RESISTANCE RATING (IBC 601)

CONSTRUCTION TYPE:	IIB
BUILDING ELEMENT:	REQ. RATING:
STRUCTURAL FRAME:	0
BEARING WALLS:	
INTERIOR:	0
EXTERIOR:	0
FLOOR CONSTRUCTION:	0
ROOF CONSTRUCTION:	0
VERTICAL EXIT ENCLOSURES:	NA
SHAFT ENCLOSURES:	
FIREWALL:	
NOTES:	

INTERIOR FINISHES (IBC 803.9)

OCCUPANCY: A3	FINISH CLASS:
EXITS & PASSAGEWAY:	B
EXIT ACCESS CORRIDOR:	A
ROOMS AND ENCLOSED SPACES:	C

CLASS A: FLAME SPREAD 0-25; SMOKE DEVELOPED 0-450
CLASS B: FLAME SPREAD 26-75; SMOKE DEVELOPED 0-450
CLASS C: FLAME SPREAD 76-200; SMOKE DEVELOPED 0-450

0 A0.01 LIFE SAFETY TEXT
1/16" = 1'-0"

ENTEROS DESIGN
314 EXCHANGE ALLEY
PETERSBURG, VA 23804
804.861.1200 P
804.861.1253 F

All ideas, designs, arrangements and plans indicated or represented by this drawing are property of ENTEROS DESIGN, PC; created, evolved and developed for the sole use of this project. These ideas, design arrangements and/or plans shall not be used by or disclosed to any person, firm or corporation for any purpose without written permission from ENTEROS DESIGN, PC. Written dimensions on these drawings shall have precedence over scaled dimensions. Contractors shall verify and be responsible for all dimensions and conditions on the job. The Architect must be notified of any variations from the dimensions and conditions shown on these drawings.
© 2016 ENTEROS DESIGN, PC

WILLIAMSON ROAD LIBRARY

3837 Williamson Road, Roanoke, VA 24012

CONSTRUCTION DOCUMENTS

REVISIONS:

LIFE SAFETY & CODE PLAN

PROJ. NO.:156003 DRAWN BY:TRF
DATE: 04.13.16

COMMONWEALTH OF VIRGINIA
GILBERT WILBURN ENZINGER
Lic. No. 011615
4/13/16
ARCHITECT

A0.01

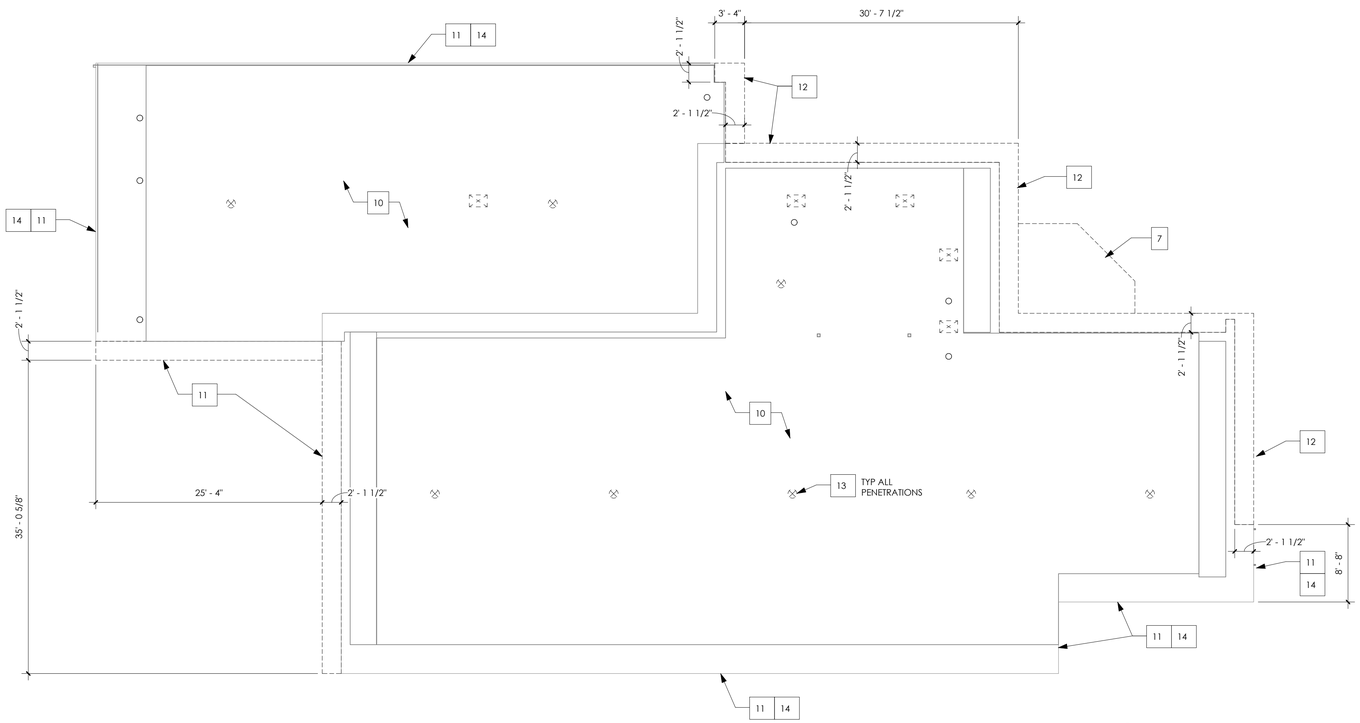

2 A0.02 ROOF DEMOLITION PLAN
1/8" = 1'-0"

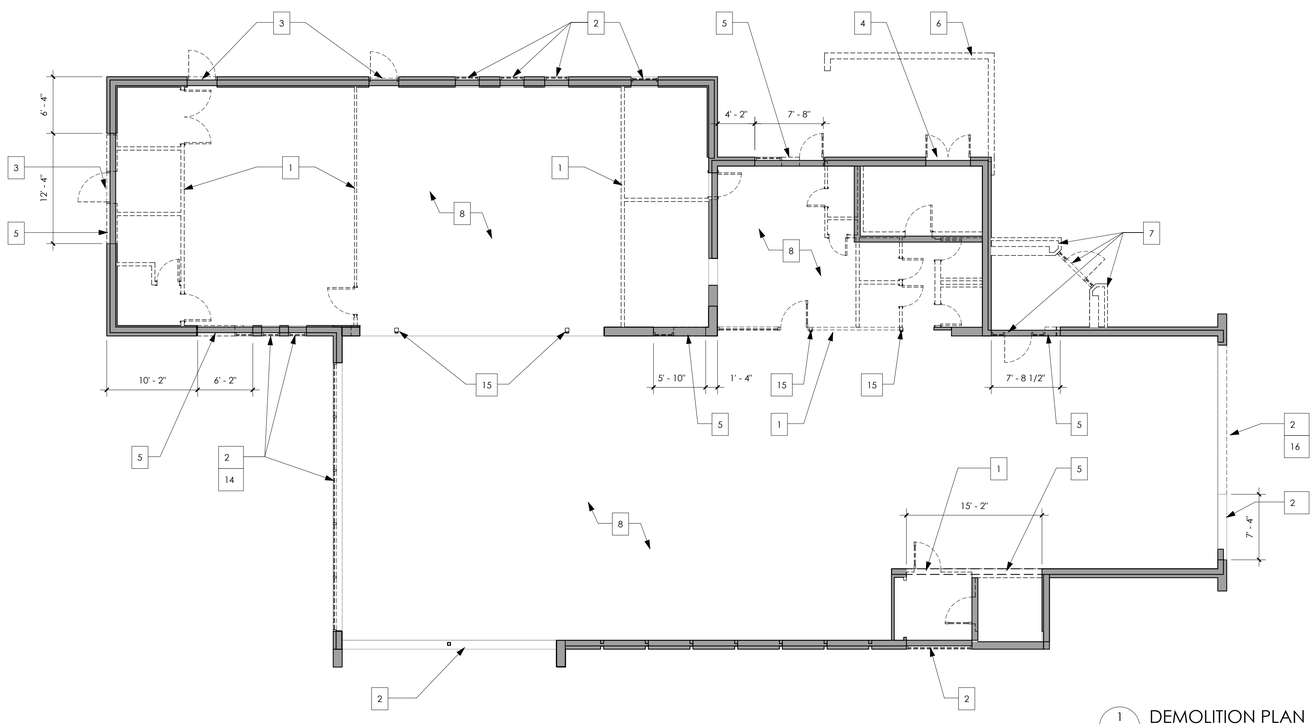

1 A0.02 DEMOLITION PLAN
1/8" = 1'-0"

DEMOLITION LEGEND

- EXISTING WALL TO REMAIN
- DEMOLISHED WALL/ELEMENT
- EXISTING ROOF DRAIN TO BE DEMOLISHED. COVER OPENING IN EXISTING METAL DECK W/ NEW SECTION OF METAL DECK OVERLAPPING EXISTING. REF. STRUCTURAL DWGS
- EXISTING VENT PIPE PENETRATION TO BE DEMOLISHED. COVER OPENING IN EXISTING METAL DECK W/ NEW SECTION OF METAL DECK OVERLAPPING EXISTING. REF. STRUCTURAL DWGS
- EXISTING MECHANICAL VENT TO BE DEMOLISHED. COVER OPENING IN EXISTING METAL DECK W/ NEW SECTION OF METAL DECK OVERLAPPING EXISTING. REF. STRUCTURAL DWGS

GENERAL DEMO NOTES

A. ALL DIMENSIONS ARE NOMINAL. FIELD VERIFY ALL DIMENSIONS.

B. PROTECT ALL EXISTING CONSTRUCTION TO REMAIN. IF EXISTING CONSTRUCTION TO REMAIN IS DAMAGED THEN REPAIR OR REPLACE TO MATCH ORIGINAL CONDITIONS.

C. MAINTAIN EXISTING BUILDING IN A SECURE AND WEATHERTIGHT CONDITION AT ALL TIMES. BOARD UP AND PROVIDE TEMPORARY OPENING PROTECTION AS REQ'D.

D. REMOVE EXISTING CONSTRUCTION WHERE SHOWN IN DASHED LINES. VERIFY STRUCTURAL SUPPORT BEFORE REMOVING CONSTRUCTION.

E. MAINTAIN FIRE EXTINGUISHING EQUIPMENT AT ALL TIMES.

F. DO NOT USE TOOLS OR EQUIPMENT WHICH COULD IGNITE COMBUSTIBLE CONSTRUCTION.

G. REFER TO ALL DRAWINGS AND SPECIFICATIONS AS IT REGARDS TO DEMOLITION, INCLUDING, BUT NOT LIMITED TO, STRUCTURAL, PLUMBING, MECHANICAL, ELECTRICAL, CIVIL, ARCHITECTURAL AND LANDSCAPE.

H. REMOVE AND TERMINATE ABANDONED ELECTRICAL, PLUMBING, MECHANICAL, OR UTILITY SYSTEM AS REQ'D BY CODE, AND AS NOTED ON OTHER DRAWINGS AND SPECIFICATIONS WITHIN THE CONSTRUCTION CONTRACT DOCUMENTS.

I. COOR. W/ ALL OTHER DWGS. & COOR. W/ MECHANICAL, PLUMBING AND ELECTRICAL DEMOLITION DWGS & NOTES.

J. CUT & PATCH EXISTING FINISHES AND CONSTRUCTION AS REQUIRED FOR NEW WORK. PROVIDE NEW MATERIALS AS REQUIRED. MATCH EXISTING FINISHES UNLESS OTHERWISE NOTED.

K. REMOVE ALL SECTIONS OF CONCRETE AS REQUIRED FOR INSTALLATION OF NEW PLUMBING. PATCH AND REPAIR SLABS AFTER INSTALLATION OF NEW PLUMBING.

KEYNOTE LEGEND

1. DEMOLISH EXISTING INTERIOR WALL PARTITION, DOORS, & WINDOWS, TYP. VERIFY STRUCTURAL SUPPORT PRIOR TO DEMOLITION
2. DEMOLISH EXISTING WINDOW FRAME & GLAZING. PREPARE EXISTING OPENING FOR NEW WINDOW INSTALLATION
3. DEMOLISH EXISTING DOOR & FRAME. PREPARE EXISTING OPENING FOR NEW KNEE WALL & WINDOW INSTALLATION
4. DEMOLISH EXISTING DOOR & FRAME. PREPARE EXISTING OPENING TO BE INFILLED W/ NEW FRAMING
5. WIDEN EXISTING OPENING PER DIMESNIONS INDICATED. WALL TO BE DEMOLISHED DOWN TO EXISTING SLAB. REF. STRUCTURAL DWGS FOR HEADER REINFORCEMENT
6. DEMOLISH EXISTING MECHANICAL ENCLOSURE WALLS & FOOTINGS
7. DEMOLISH EXISTING ENTRY VESTIBULE WALLS, ROOF STRUCTURE, WINDOWS, DOORS, FLOOR SLAB, & FOOTINGS
8. REMOVE EXISTING FLOOR FINISH AND PREP SLAB FOR NEW FINISH MATERIAL (TYP ENTIRE EXISTING LIBRARY)
9. REMOVE EXISTING ROOF MEMBRANE AND RIGID INSULATION. PREP EXISTING METAL DECK TO RECIEVE NEW TAPERED INSULATION & MEMBRANE
10. REMOVE EXISTING ROOF BALLAST, MEMBRANE, AND RIGID INSULATION. PREP EXISTING METAL DECK TO RECIEVE NEW TAPERED INSULATION & MEMBRANE
11. REMOVE EXISTING PERIMETER BLOCKING FROM FASCIA AND SOFFIT. PREPARE OUTRIGGERS AND TRUSS TAILS FOR NEW CONSTRUCTION, TYP ALL LOCATIONS
12. CUT BACK ROOF OUTRIGGERS AND TRUSS TAILS TO FACE OF EXISTING MASONRY & PREPARE SURFACES FOR NEW CONSTRUCTION
13. REMOVE EXISTING ROOF DRAINS AND EQUIPMENT AND COVER OPENING IN EXISTING METAL DECK W/ NEW SECTION OF METAL DECK OVERLAPPING EXISTING. REF. STRUCTURAL DWGS
14. REMOVE EXISTING SOFFITS AND ASSOCIATED MATERIALS AS REQUIRED FOR INSTALLATION OF NEW SOFFITS. TYP ALL LOCATIONS
15. EXISTING COLUMN TO REMAIN
16. DEMOLISH EXISTING KNEE WALL

ENTEROS DESIGN

314 EXCHANGE ALLEY
PETERSBURG, VA 23804

804.861.1200 P
804.861.1253 F

All ideas, designs, arrangements and plans indicated or represented by this drawing are property of ENTEROS DESIGN, PC; created, evolved and developed for the sole use of this project. These ideas, design arrangements and/or plans shall not be used by or disclosed to any person, firm or corporation for any purpose without written permission from ENTEROS DESIGN, PC. Written dimensions on these drawings shall have precedence over scaled dimensions. Contractors shall verify and be responsible for all dimensions and conditions on the job. The Architect must be notified of any variations from the dimensions and conditions shown on these drawings.
© 2016 ENTEROS DESIGN, PC

WILLIAMSON ROAD LIBRARY

3837 Williamson Road, Roanoke, VA 24012

CONSTRUCTION DOCUMENTS

REVISIONS:

DEMOLITION PLANS

PROJ. NO.:156003 DRAWN BY:TRF
DATE: 04.13.16

COMMONWEALTH OF VIRGINIA
GILBERT WILBURN ENTZMINGER
Lic. No. 011615
4/13/16
ARCHITECT

A0.02

5 A1.01 SECTION DETAIL
3/4" = 1'-0"

3 A1.01 ENLARGED PLAN
3/8" = 1'-0"

4 A1.01 SECTION DETAIL
3/4" = 1'-0"

2 A1.01 ENLARGED PLAN
3/8" = 1'-0"

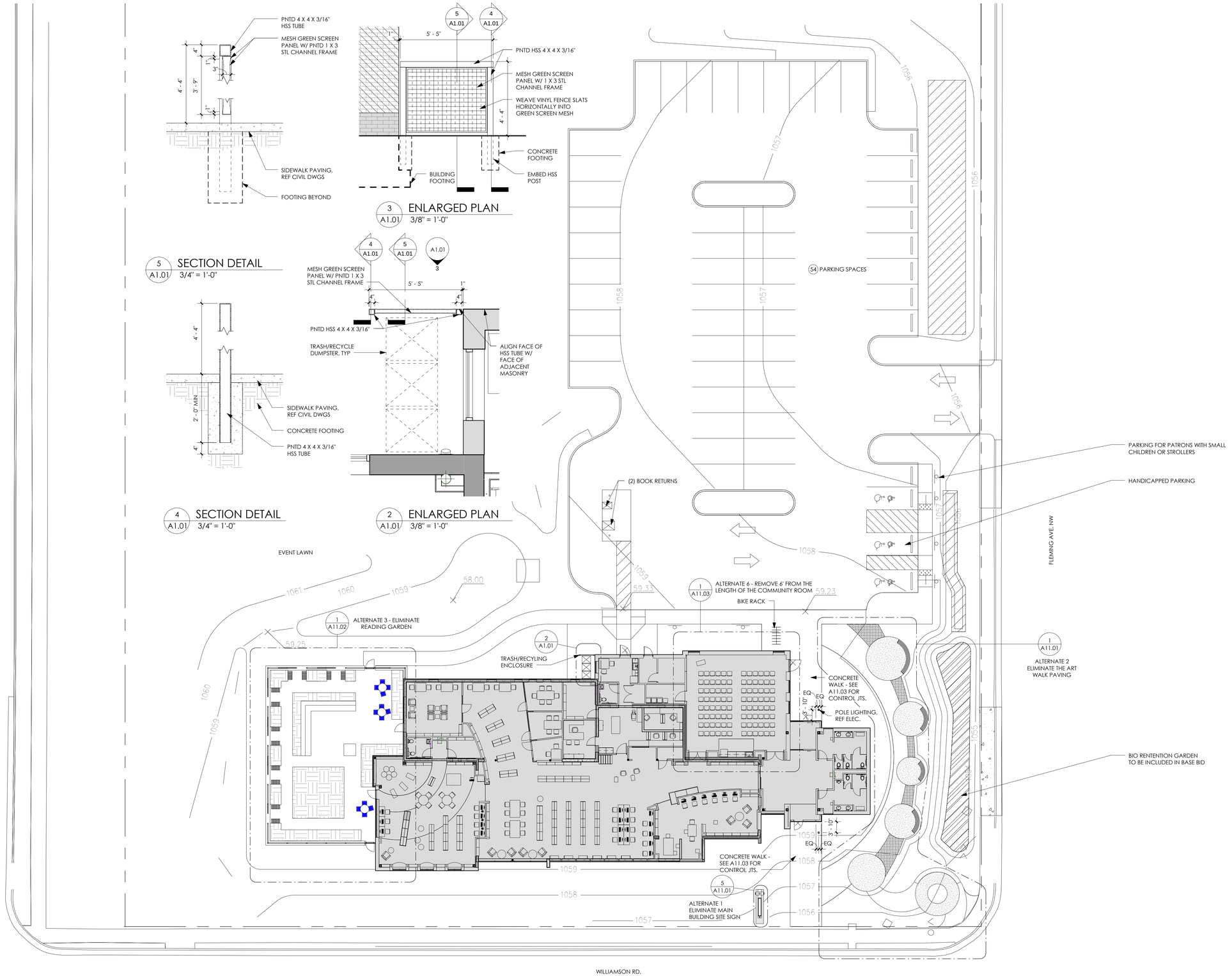

1 A1.01 SITE PLAN
1/16" = 1'-0"

ENTEROS DESIGN

314 EXCHANGE ALLEY
PETERSBURG, VA 23804

804.861.1200 P
804.861.1253 F

All ideas, designs, arrangements and plans indicated or represented by this drawing are property of ENTEROS DESIGN, PC; created, evolved and developed for the sole use of this project. These ideas, design arrangements and/or plans shall not be used by or disclosed to any person, firm or corporation for any purpose without written permission from ENTEROS DESIGN, PC. Written dimensions on these drawings shall have precedence over scaled dimensions. Contractors shall verify and be responsible for all dimensions and conditions on the job. The Architect must be notified of any variations from the dimensions and conditions shown on these drawings.
© 2016 ENTEROS DESIGN, PC

WILLIAMSON ROAD LIBRARY

3837 Williamson Road, Roanoke, VA 24012

CONSTRUCTION DOCUMENTS

REVISIONS:

ARCHITECTURAL SITE PLAN

PROJ. NO.:156003 DRAWN BY:TRF
DATE: 04.13.16

COMMONWEALTH OF VIRGINIA
GILBERT WILBURN ENTZMINGER
Lic. No. 011615
4/13/16
ARCHITECT

A1.01

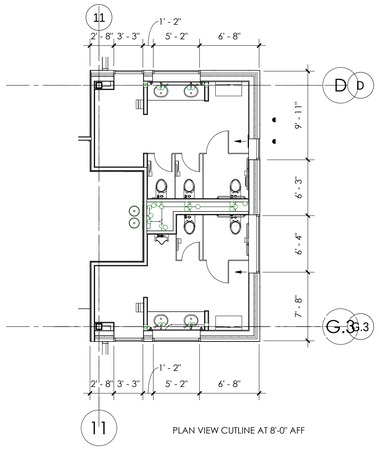

2 A2.01 BUILDING PLAN CALLOUT
1/8" = 1'-0"

WALL LEGEND

- EXISTING WALL
- NEW MASONRY WALL

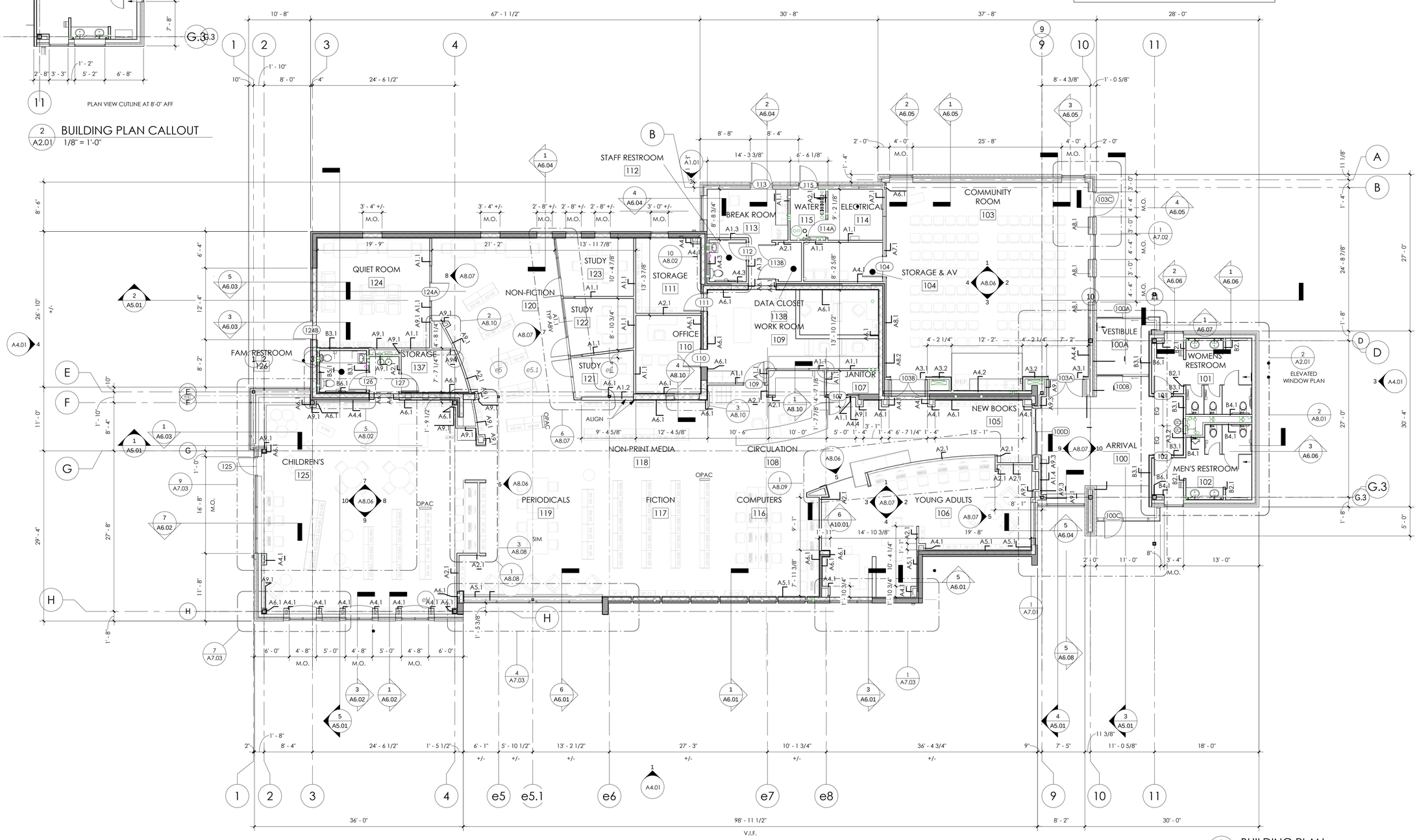

1 A2.01 BUILDING PLAN
1/8" = 1'-0"

ENTEROS DESIGN
314 EXCHANGE ALLEY
PETERSBURG, VA 23804
804.861.1200 P
804.861.1253 F

All ideas, designs, arrangements and plans indicated or represented by this drawing are property of ENTEROS DESIGN, PC; created, evolved and developed for the sole use of this project. These ideas, design arrangements and/or plans shall not be used by or disclosed to any person, firm or corporation for any purpose without written permission from ENTEROS DESIGN, PC. Written dimensions on these drawings shall have precedence over scaled dimensions. Contractors shall verify and be responsible for all dimensions and conditions on the job. The Architect must be notified of any variations from the dimensions and conditions shown on these drawings.
© 2016 ENTEROS DESIGN, PC

WILLIAMSON ROAD LIBRARY

3837 Williamson Road, Roanoke, VA 24012

CONSTRUCTION DOCUMENTS

REVISIONS:

BUILDING PLAN

PROJ. NO.:156003 DRAWN BY:TRF
DATE: 04.13.16

COMMONWEALTH OF VIRGINIA
GILBERT WILBURN ENZINGER
Lic. No. 011615
4/13/16
ARCHITECT

NORTH

A2.01

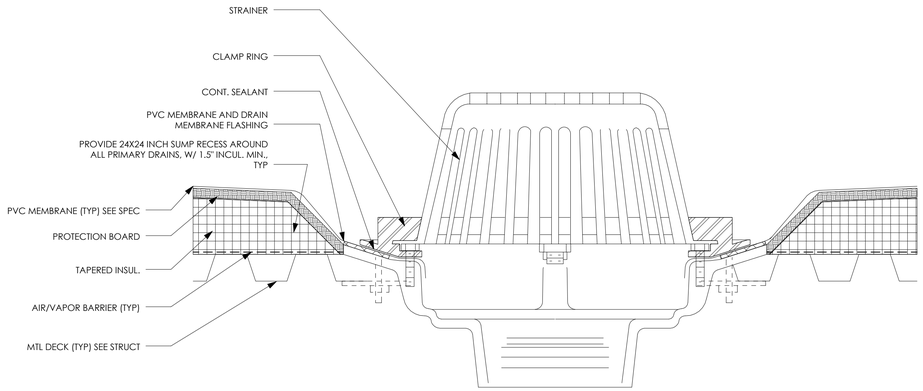

8 A3.01 ROOF DETAIL
3" = 1'-0"

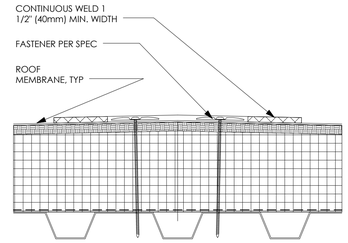

6 A3.01 ROOF DETAIL
3" = 1'-0"

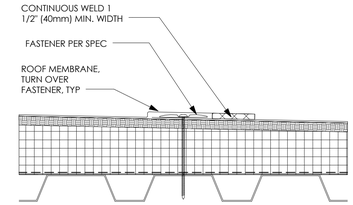

4 A3.01 ROOF DETAIL
3" = 1'-0"

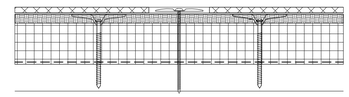

5 A3.01 ROOF DETAIL
3" = 1'-0"

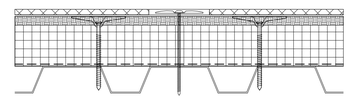

3 A3.01 ROOF DETAIL
3" = 1'-0"

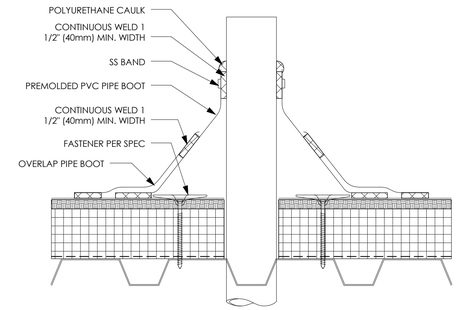

2 A3.01 ROOF DETAIL
3" = 1'-0"

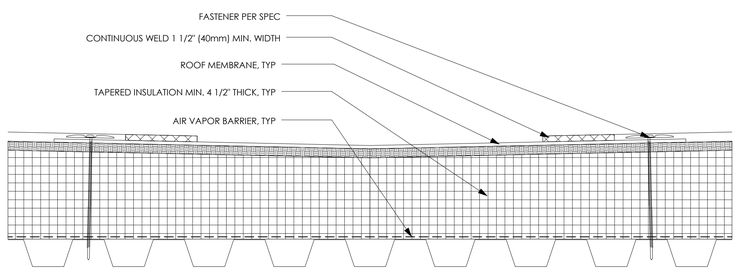

7 A3.01 ROOF DETAIL TYPICAL
3" = 1'-0"

ROOF LEGEND

- EXISTING ROOF MEMBRANE TO BE REPLACED W/ NEW MEMBRANE
- NEW WHITE ROOF MEMBRANE
- NEW GRAY ROOF MEMBRANE
- WALKING MATS
- NEW ROOF DRAIN
- NEW OVERFLOW DRAIN
- PIPE PENETRATION, REF PLUMBING DWGS
- GRAY PARAPET MEMBRANE

NOTE: CONTRACTOR IS TO ADJUST THICKNESS OF TAPERED INSULATION AS REQUIRED FOR ALIGNMENT & SMOOTH TRANSITION BETWEEN EXISTING & NEW CONSTRUCTION

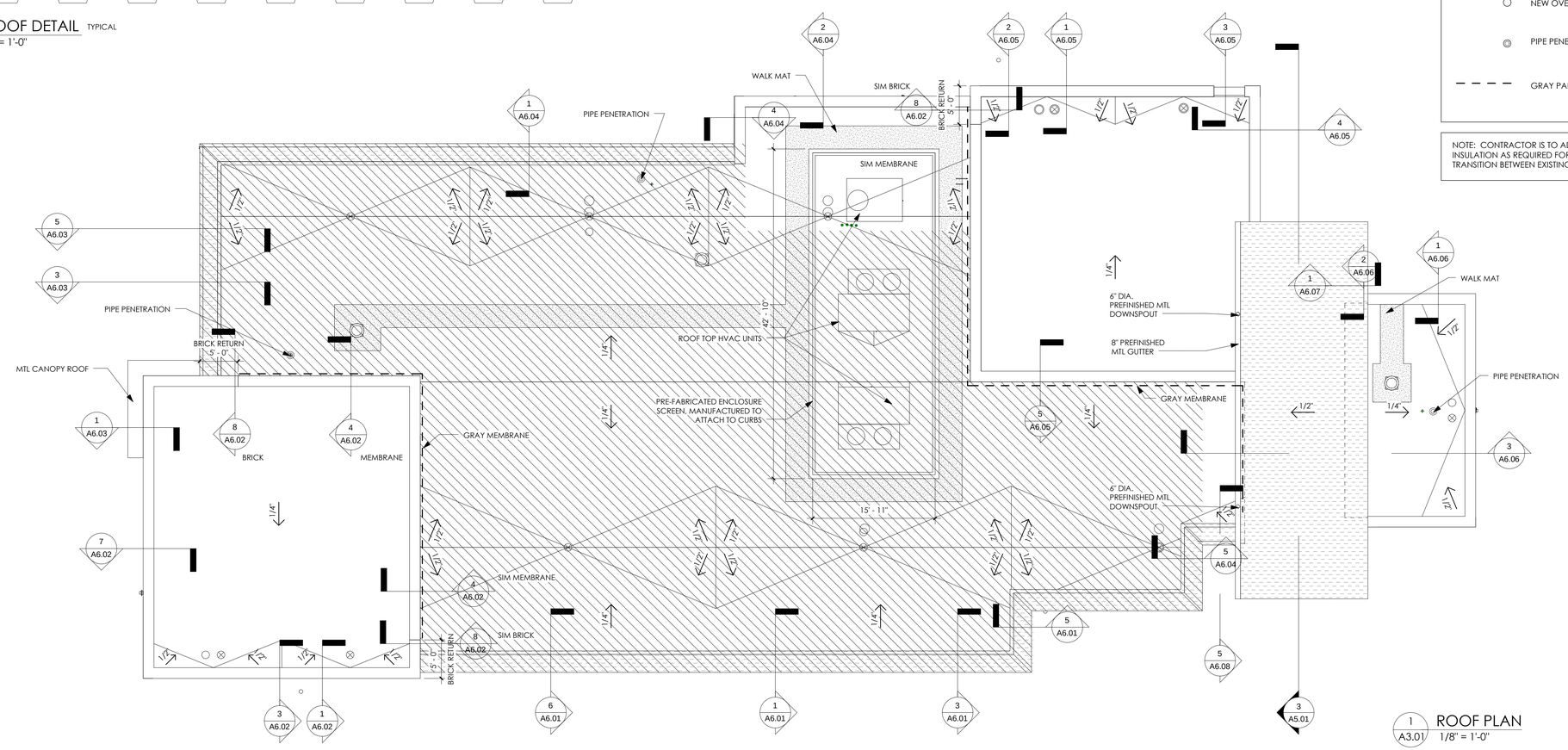

1 A3.01 ROOF PLAN
1/8" = 1'-0"

ENTEROS DESIGN
314 EXCHANGE ALLEY
PETERSBURG, VA 23804
804.861.1200 P
804.861.1253 F

All ideas, designs, arrangements and plans indicated or represented by this drawing are property of ENTEROS DESIGN, PC; created, evolved and developed for the sole use of this project. These ideas, design arrangements and/or plans shall not be used by or disclosed to any person, firm or corporation for any purpose without written permission from ENTEROS DESIGN, PC. Written dimensions on these drawings shall have precedence over scaled dimensions. Contractors shall verify and be responsible for all dimensions and conditions on the job. The Architect must be notified of any variations from the dimensions and conditions shown on these drawings.
© 2016 ENTEROS DESIGN, PC

WILLIAMSON ROAD LIBRARY

3837 Williamson Road, Roanoke, VA 24012

CONSTRUCTION DOCUMENTS

REVISIONS:

ROOF PLAN

PROJ. NO.:156003 DRAWN BY:TRF
DATE: 04.13.16

COMMONWEALTH OF VIRGINIA
GILLETT WILBURN SCHLINGER
Lic. No. 011615
4/13/16
ARCHITECT

A3.01

ELEVATION GENERAL NOTES

1. RESEAL ALL EXISTING EXTERIOR JOINTS
2. ALL COMPOSITE ALUMINUM PANEL TO BE COLOR 1 UNLESS OTHERWISE NOTED

ELEVATION FINISH LEGEND

- GL-1 INSULATED LOW-E GLAZING
- GL-2 INSULATED FROSTED GLAZING
- GL-3 INSULATED SPANDREL GLAZING
- MP-1 GLAZED-IN COMPOSITE ALUMINUM METAL PANEL (COLOR 1)
- MP-2 COMPOSITE ALUMINUM PANEL (COLOR 2)
- EXISTING MASONRY (TAN)
- EXISTING MASONRY STAINED (BROWN)
- MASONRY (TAN)
- MASONRY (BROWN)
- MASONRY (TO MATCH EXISTING)

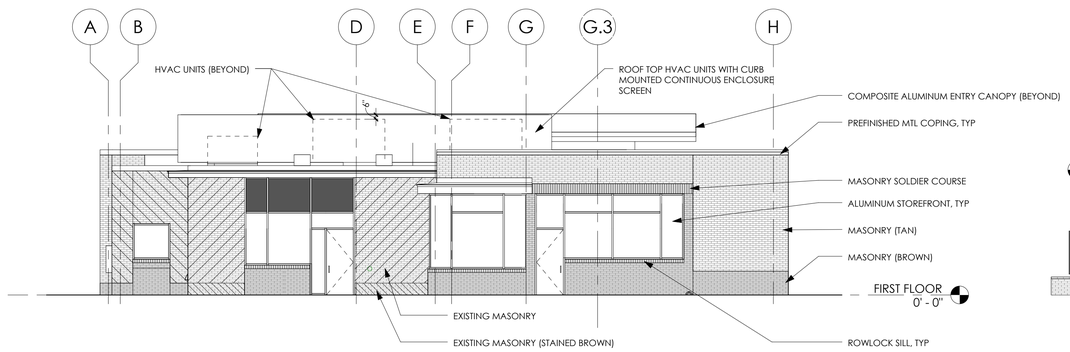

4 A4.01 WEST ELEVATION
1/8" = 1'-0"

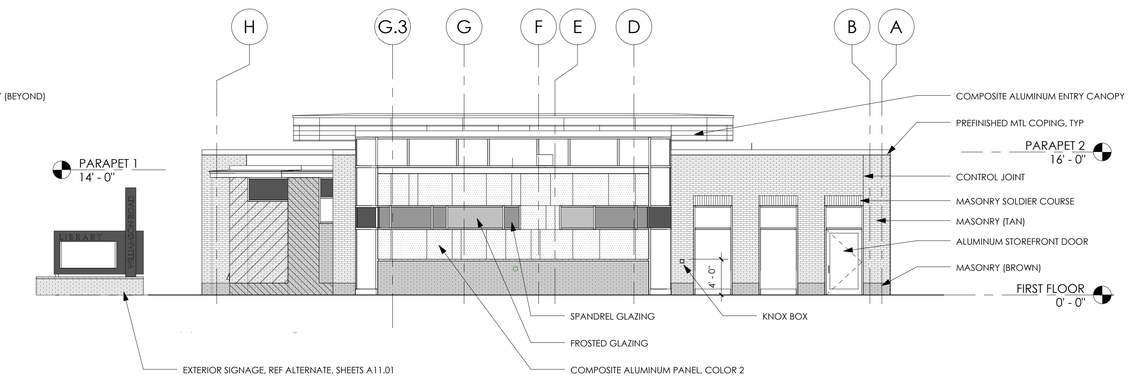

3 A4.01 EAST ELEVATION
1/8" = 1'-0"

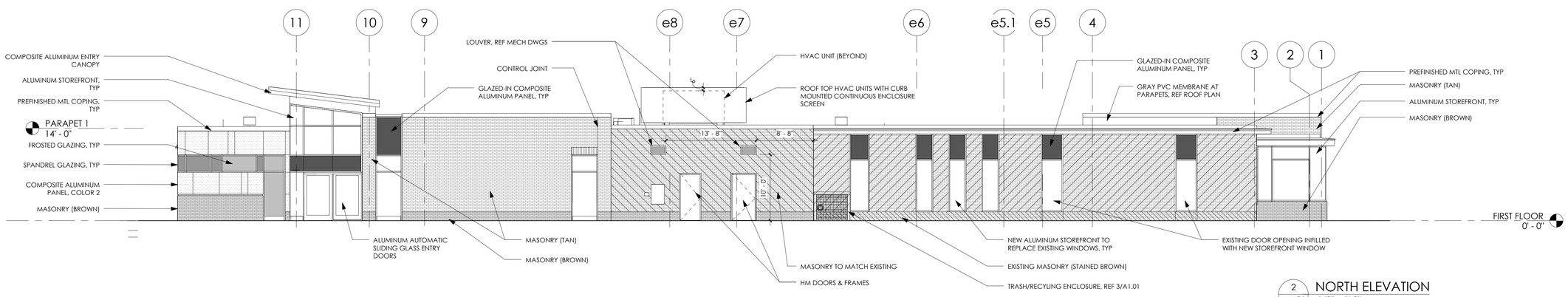

2 A4.01 NORTH ELEVATION
1/8" = 1'-0"

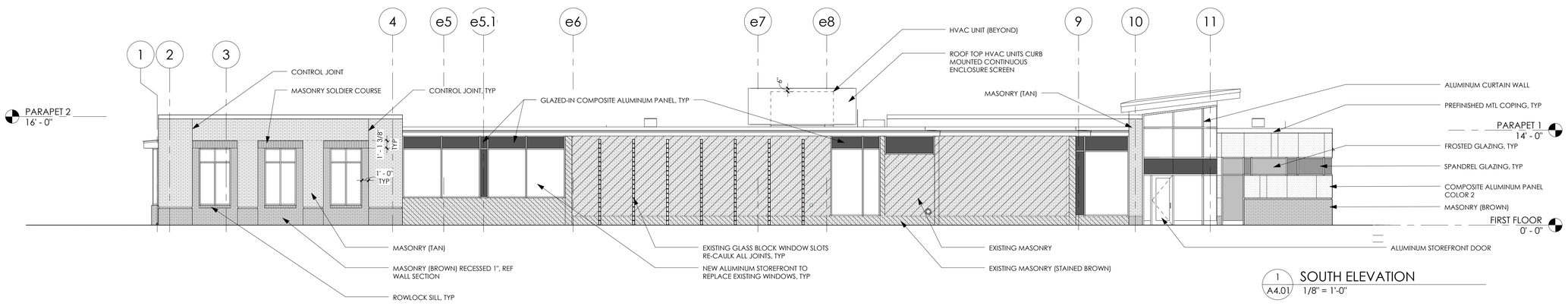

1 A4.01 SOUTH ELEVATION
1/8" = 1'-0"

ENTEROS DESIGN

314 EXCHANGE ALLEY
PETERSBURG, VA 23804

804.861.1200 P
804.861.1253 F

All ideas, designs, arrangements and plans indicated or represented by this drawing are property of ENTEROS DESIGN, PC; created, evolved and developed for the sole use of this project. These ideas, design arrangements and/or plans shall not be used by or disclosed to any person, firm or corporation for any purpose without written permission from ENTEROS DESIGN, PC. Written dimensions on these drawings shall have precedence over scaled dimensions. Contractors shall verify and be responsible for all dimensions and conditions on the job. The Architect must be notified of any variations from the dimensions and conditions shown on these drawings.
© 2016 ENTEROS DESIGN, PC

WILLIAMSON ROAD LIBRARY

3837 Williamson Road, Roanoke, VA 24012

CONSTRUCTION DOCUMENTS

REVISIONS:

BUILDING ELEVATIONS

PROJ. NO.:156003 DRAWN BY:TRF
DATE: 04.13.16

COMMONWEALTH OF VIRGINIA
GILBERT WILBURN ENTZMINGER
Lic. No. 011615
4/13/16
ARCHITECT

A4.01

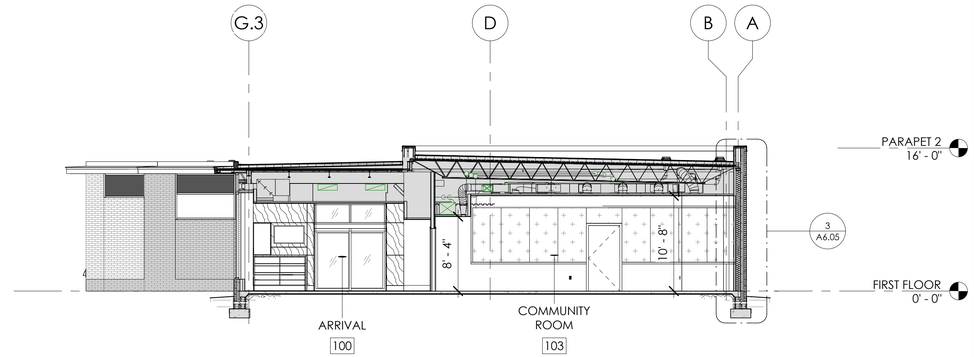

4 A5.01 BUILDING SECTION
1/8" = 1'-0"

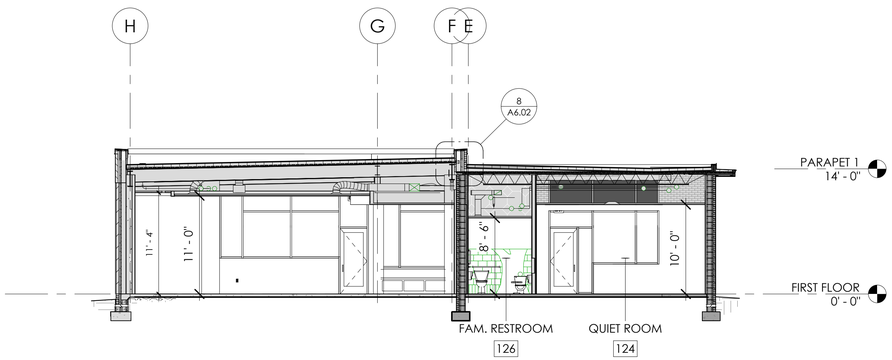

5 A5.01 BUILDING SECTION
1/8" = 1'-0"

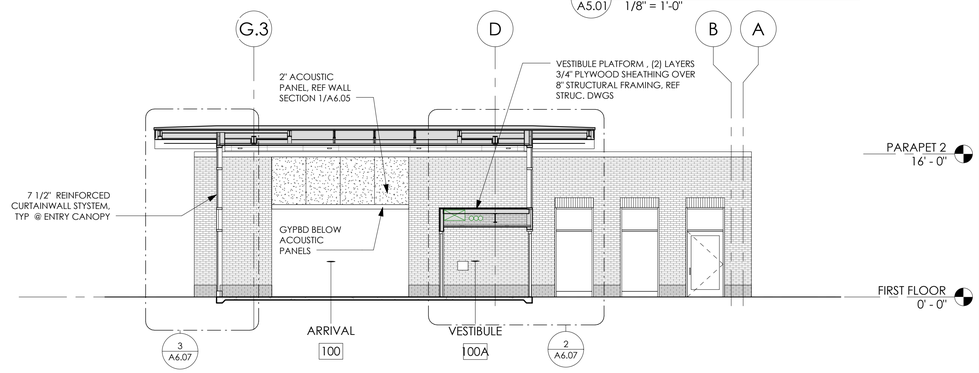

3 A5.01 BUILDING SECTION
1/8" = 1'-0"

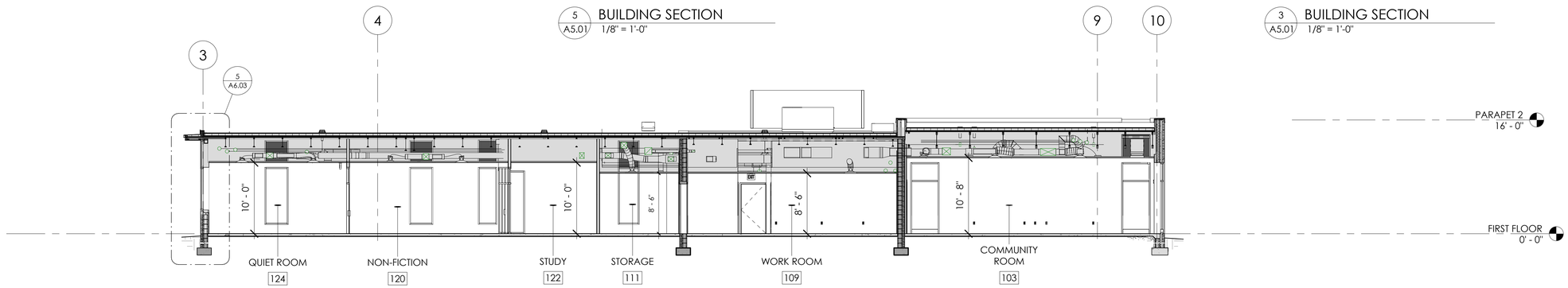

2 A5.01 BUILDING SECTION
1/8" = 1'-0"

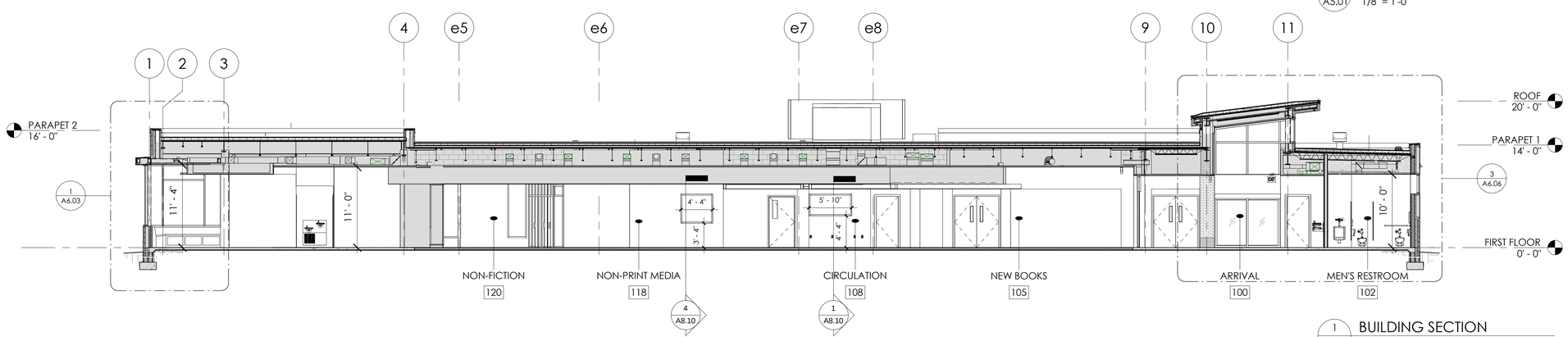

1 A5.01 BUILDING SECTION
1/8" = 1'-0"

ENTEROS DESIGN

314 EXCHANGE ALLEY
PETERSBURG, VA 23804

804.861.1200 P
804.861.1253 F

All ideas, designs, arrangements and plans indicated or represented by this drawing are property of ENTEROS DESIGN, PC; created, evolved and developed for the sole use of this project. These ideas, design arrangements and/or plans shall not be used by or disclosed to any person, firm or corporation for any purpose without written permission from ENTEROS DESIGN, PC. Written dimensions on these drawings shall have precedence over scaled dimensions. Contractors shall verify and be responsible for all dimensions and conditions on the job. The Architect must be notified of any variations from the dimensions and conditions shown on these drawings.
© 2016 ENTEROS DESIGN, PC

WILLIAMSON ROAD LIBRARY

3837 Williamson Road, Roanoke, VA 24012

CONSTRUCTION DOCUMENTS

REVISIONS:

BUILDING SECTIONS

PROJ. NO.:156003 DRAWN BY:TRF
DATE: 04.13.16

COMMONWEALTH OF VIRGINIA
GILES WILKERSON WEIMER
Lic. No. 011615
4/13/16
ARCHITECT

A5.01

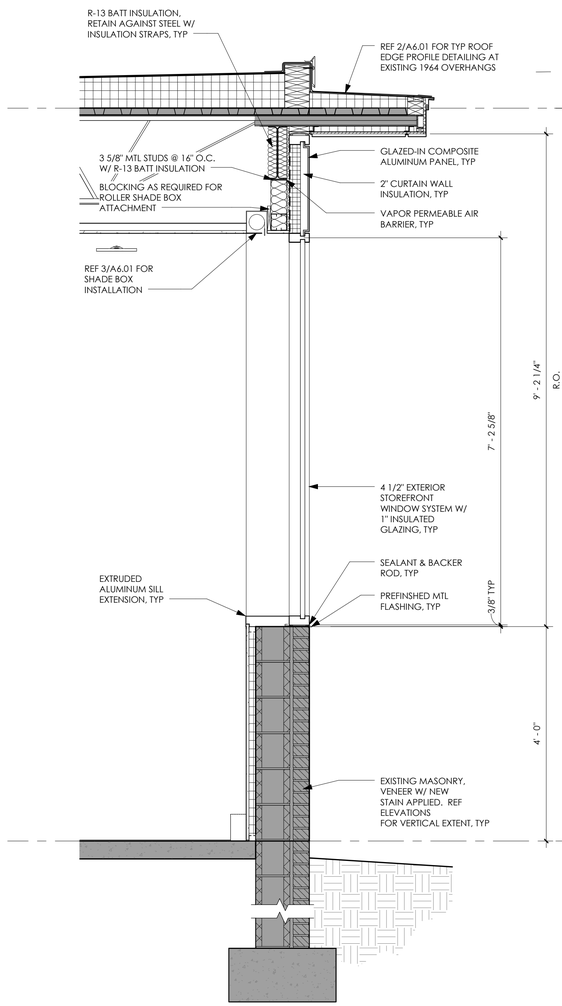

6 A6.01 WALL SECTION
3/4" = 1'-0"

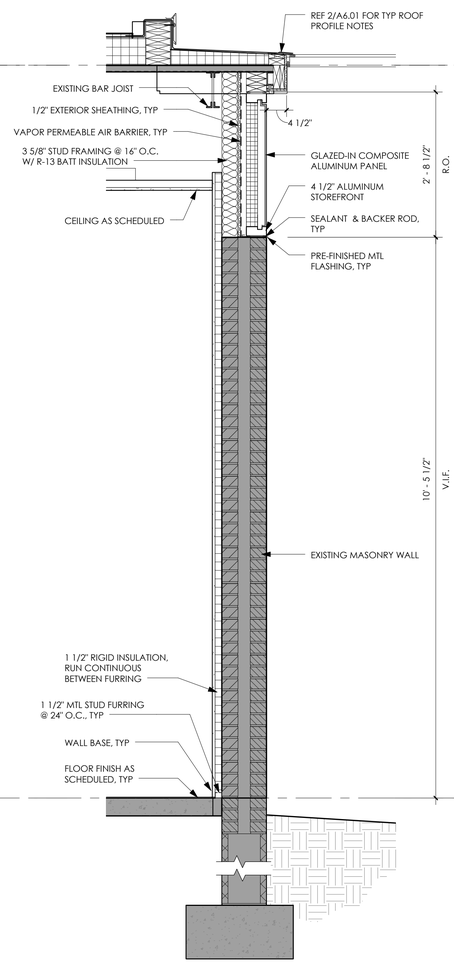

5 A6.01 WALL SECTION
3/4" = 1'-0"

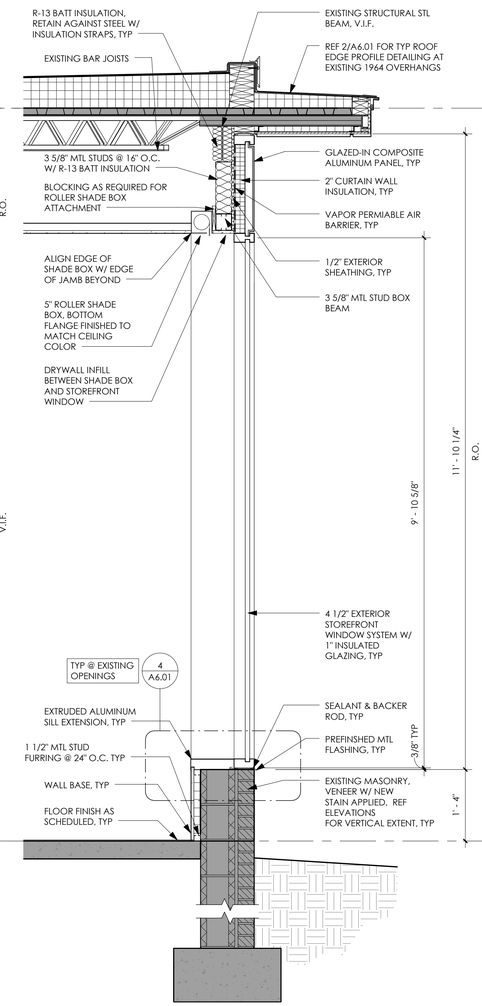

3 A6.01 WALL SECTION
3/4" = 1'-0"

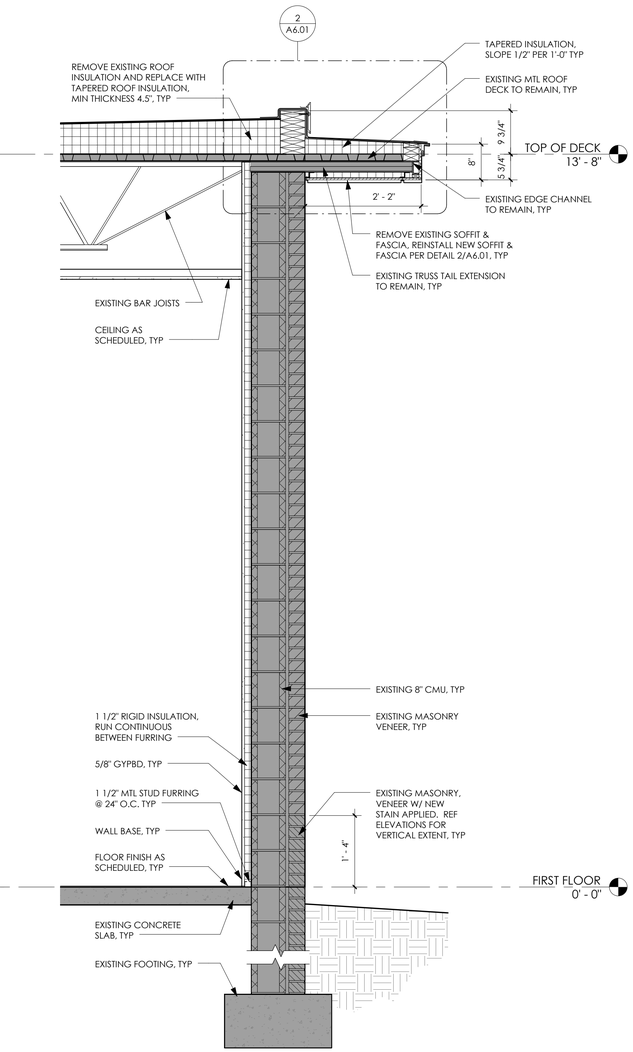

1 A6.01 WALL SECTION
3/4" = 1'-0"

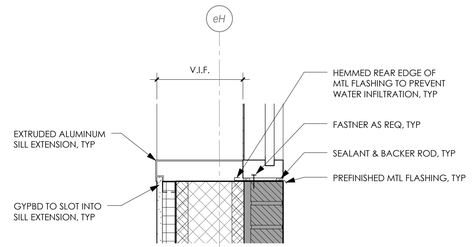

4 A6.01 SECTION DETAIL
1 1/2" = 1'-0"

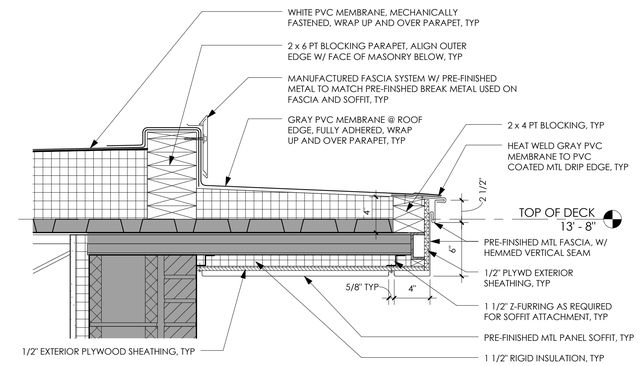

2 A6.01 SECTION DETAIL
1 1/2" = 1'-0"

ENTEROS DESIGN

314 EXCHANGE ALLEY
PETERSBURG, VA 23804

804.861.1200 P
804.861.1253 F

All ideas, designs, arrangements and plans indicated or represented by this drawing are property of ENTEROS DESIGN, PC; created, evolved and developed for the sole use of this project. These ideas, design arrangements and/or plans shall not be used by or disclosed to any person, firm or corporation for any purpose without written permission from ENTEROS DESIGN, PC. Written dimensions on these drawings shall have precedence over scaled dimensions. Contractors shall verify and be responsible for all dimensions and conditions on the job. The Architect must be notified of any variations from the dimensions and conditions shown on these drawings.
© 2016 ENTEROS DESIGN, PC

WILLIAMSON ROAD LIBRARY

3837 Williamson Road, Roanoke, VA 24012

CONSTRUCTION DOCUMENTS

REVISIONS:

WALL SECTIONS

PROJ. NO.:156003 DRAWN BY:TRF
DATE: 04.13.16

COMMONWEALTH OF VIRGINIA
GILLETT WILLIAMS ENTERIOS
Lic. No. 011615
4/13/16
ARCHITECT

A6.01

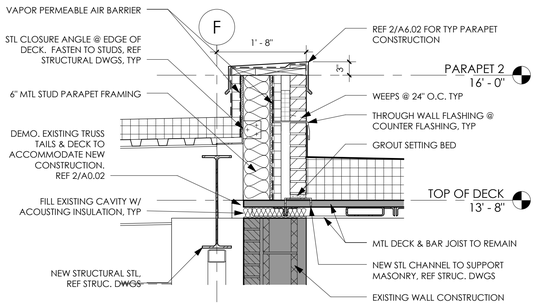

8 A6.02 WALL SECTION
3/4" = 1'-0"

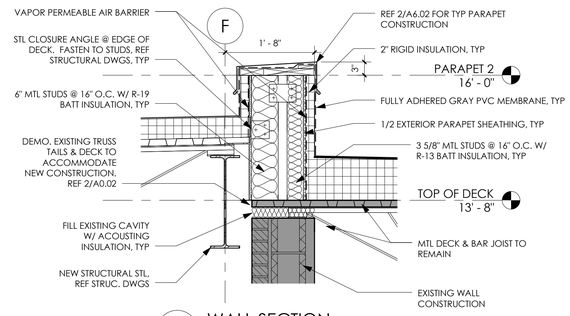

4 A6.02 WALL SECTION
3/4" = 1'-0"

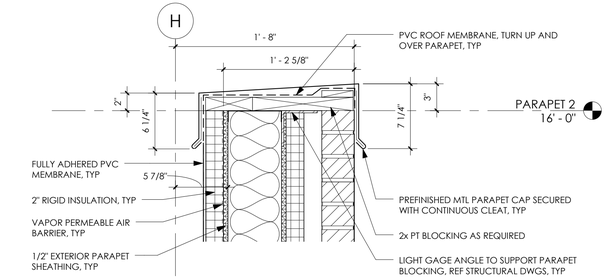

2 A6.02 SECTION DETAIL
1 1/2" = 1'-0"

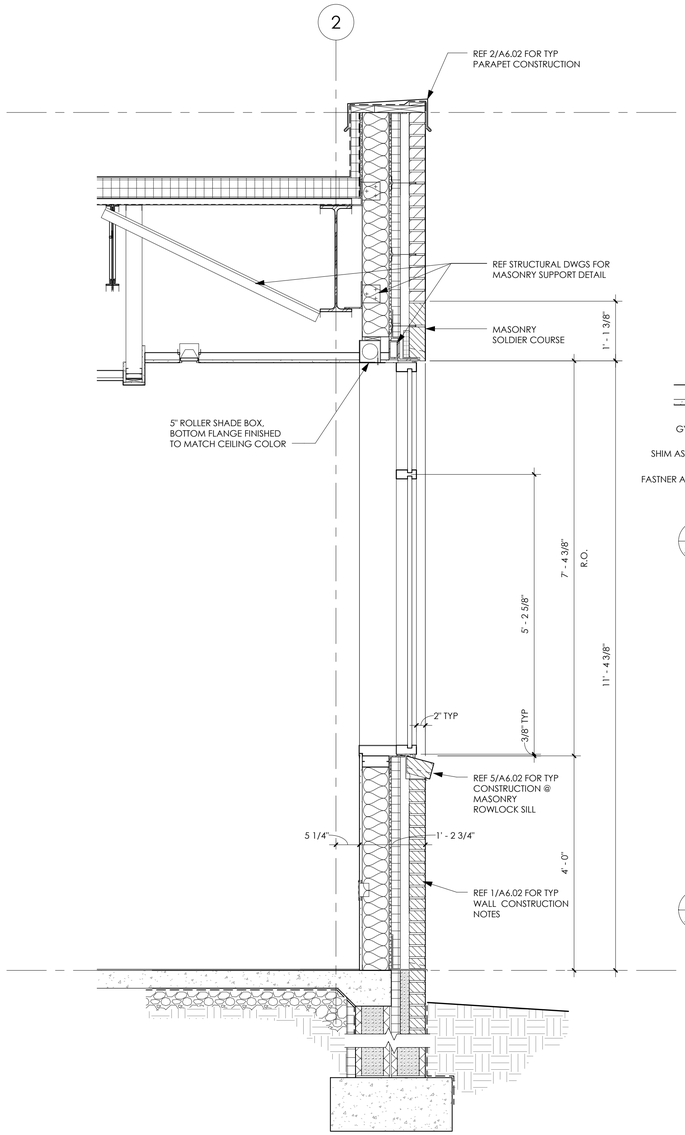

7 A6.02 WALL SECTION
3/4" = 1'-0"

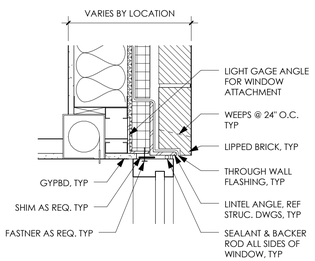

6 A6.02 SECTION DETAIL
1 1/2" = 1'-0"

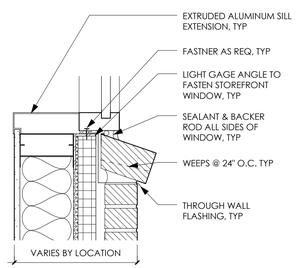

5 A6.02 SECTION DETAIL
1 1/2" = 1'-0"

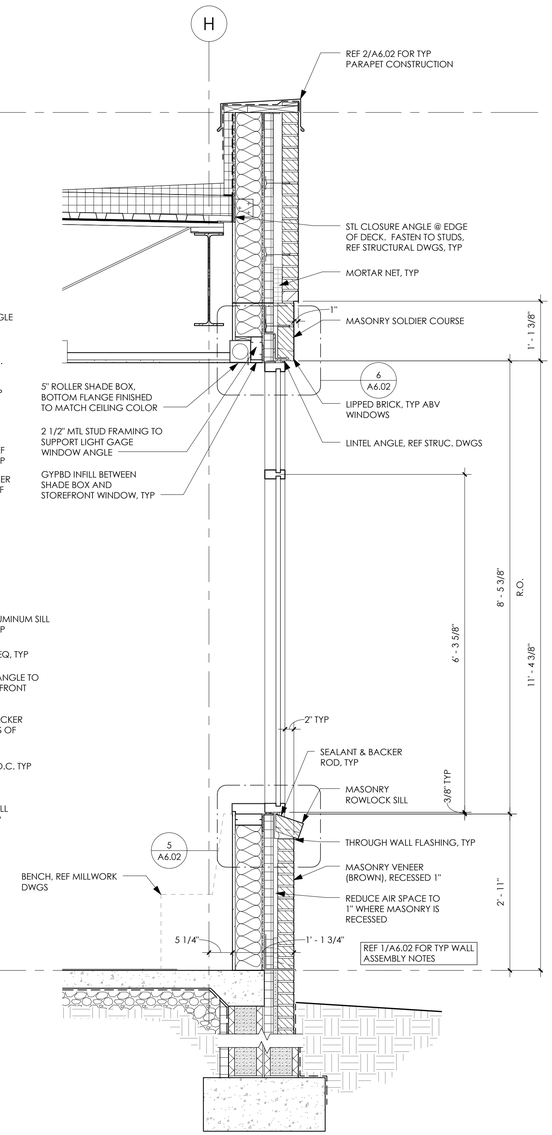

3 A6.02 WALL SECTION
3/4" = 1'-0"

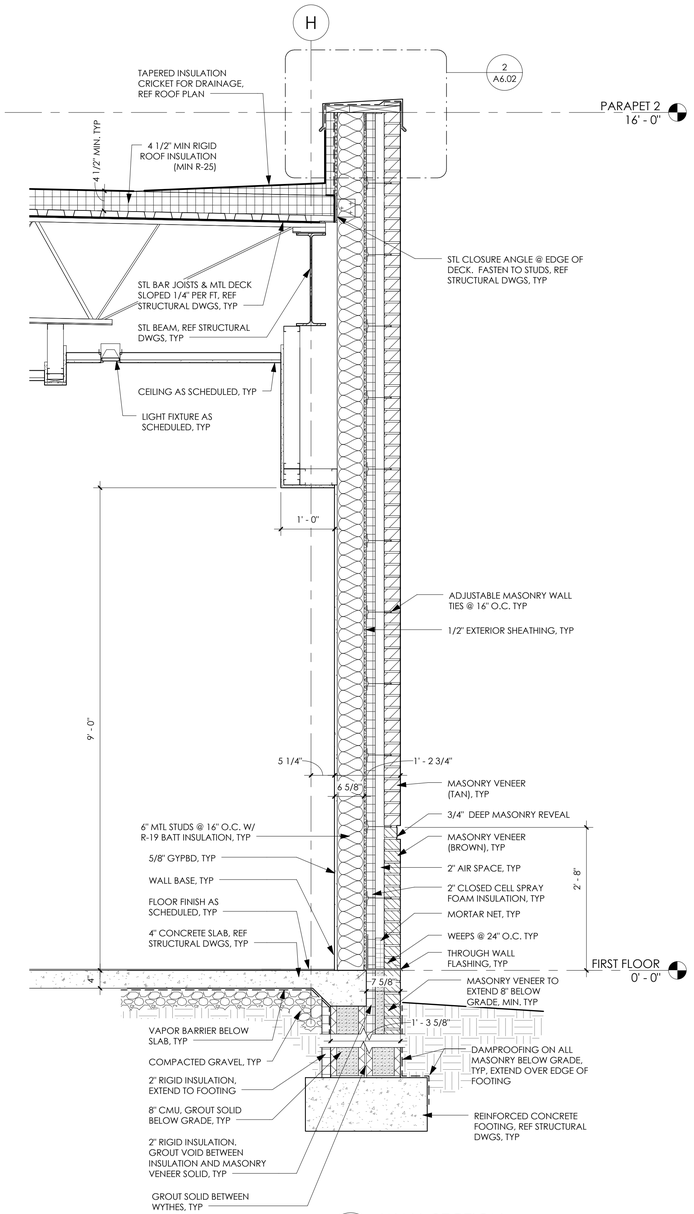

1 A6.02 WALL SECTION
3/4" = 1'-0"

ENTEROS DESIGN
314 EXCHANGE ALLEY
PETERSBURG, VA 23804
804.861.1200 P
804.861.1253 F

All ideas, designs, arrangements and plans indicated or represented by this drawing are property of ENTEROS DESIGN, PC; created, evolved and developed for the sole use of this project. These ideas, design arrangements and/or plans shall not be used by or disclosed to any person, firm or corporation for any purpose without written permission from ENTEROS DESIGN, PC. Written dimensions on these drawings shall have precedence over scaled dimensions. Contractors shall verify and be responsible for all dimensions and conditions on the job. The Architect must be notified of any variations from the dimensions and conditions shown on these drawings.
© 2016 ENTEROS DESIGN, PC

WILLIAMSON ROAD LIBRARY
3837 Williamson Road, Roanoke, VA 24012

CONSTRUCTION DOCUMENTS

REVISIONS:

WALL SECTIONS

PROJ. NO.:156003 DRAWN BY:TRF
DATE: 04.13.16

COMMONWEALTH OF VIRGINIA
GILBERT WILBURN ENTZINGER
Lic. No. 011615
4/13/16
ARCHITECT

A6.02

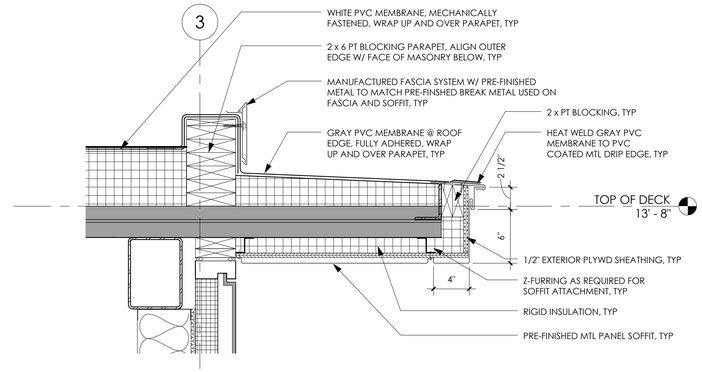

4 A6.03 SECTION DETAIL
1 1/2" = 1'-0"

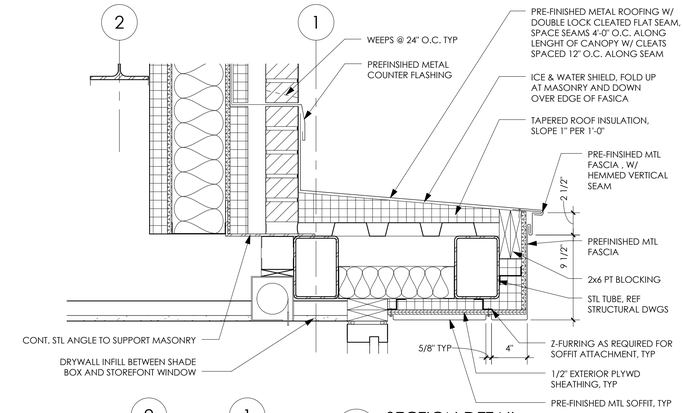

2 A6.03 SECTION DETAIL
1 1/2" = 1'-0"

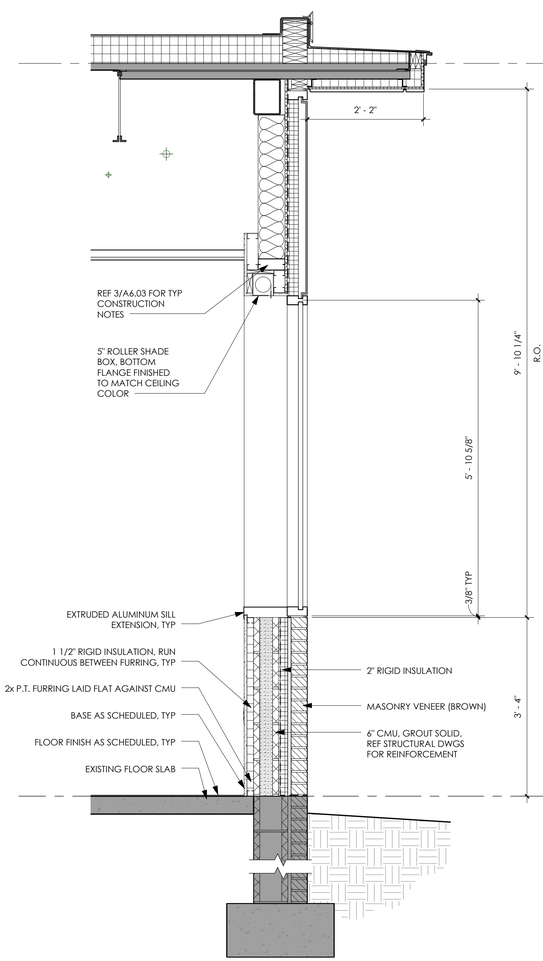

5 A6.03 WALL SECTION
3/4" = 1'-0"

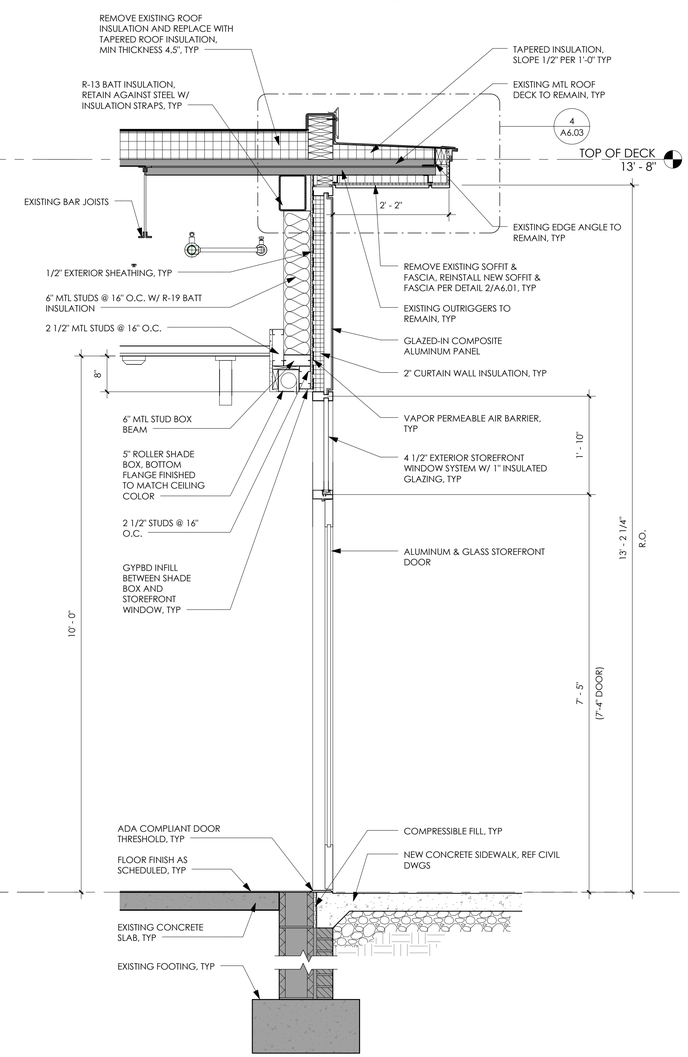

3 A6.03 WALL SECTION
3/4" = 1'-0"

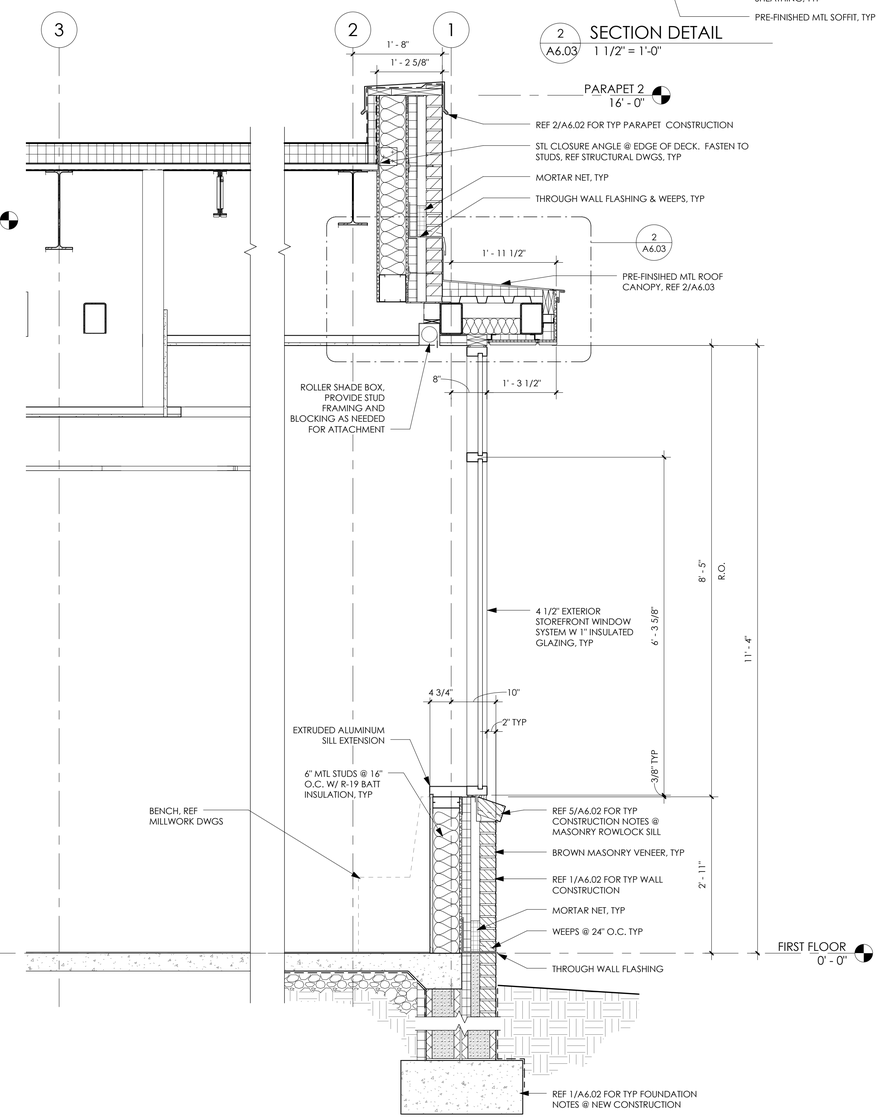

1 A6.03 WALL SECTION
3/4" = 1'-0"

ENTEROS DESIGN

314 EXCHANGE ALLEY
PETERSBURG, VA 23804

804.861.1200 P
804.861.1253 F

All ideas, designs, arrangements and plans indicated or represented by this drawing are property of ENTEROS DESIGN, PC; created, evolved and developed for the sole use of this project. These ideas, design arrangements and/or plans shall not be used by or disclosed to any person, firm or corporation for any purpose without written permission from ENTEROS DESIGN, PC. Written dimensions on these drawings shall have precedence over scaled dimensions. Contractors shall verify and be responsible for all dimensions and conditions on the job. The Architect must be notified of any variations from the dimensions and conditions shown on these drawings.
© 2016 ENTEROS DESIGN, PC

WILLIAMSON ROAD LIBRARY

3837 Williamson Road, Roanoke, VA 24012

CONSTRUCTION DOCUMENTS

REVISIONS:

WALL SECTIONS

PROJ. NO.:156003 DRAWN BY:TRF
DATE: 04.13.16

COMMONWEALTH OF VIRGINIA
GILBERT CELICIO ENTEROS
Lic. No. 011615
4/13/16
ARCHITECT

A6.03

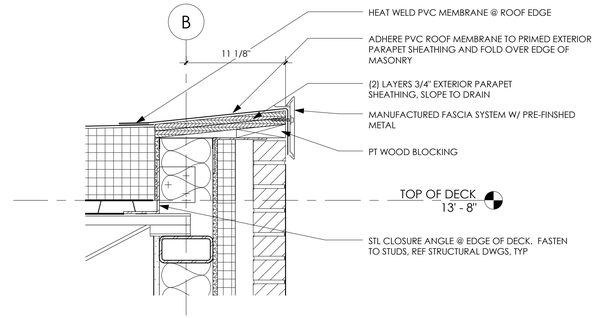

3 A6.04 SECTION DETAIL
1 1/2" = 1'-0"

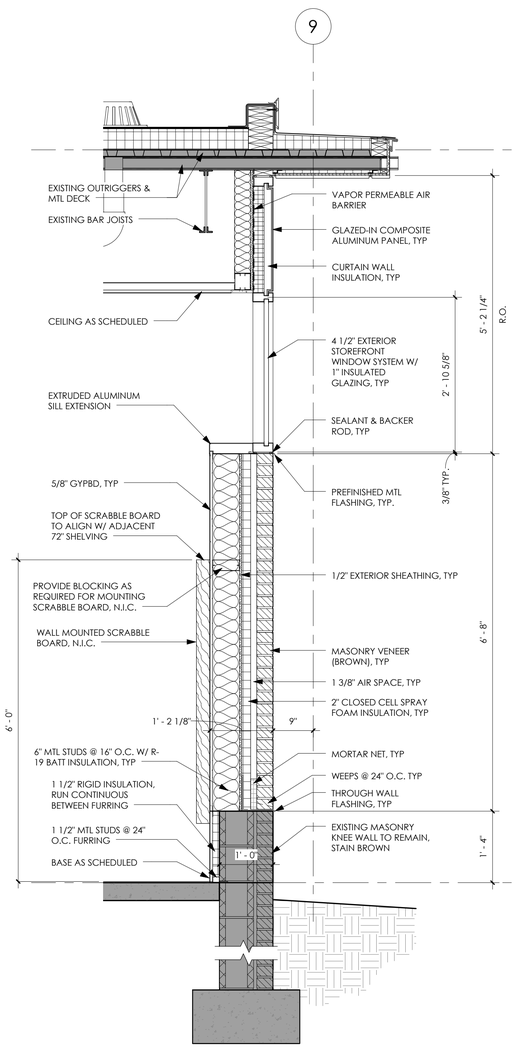

5 A6.04 Section 23
3/4" = 1'-0"

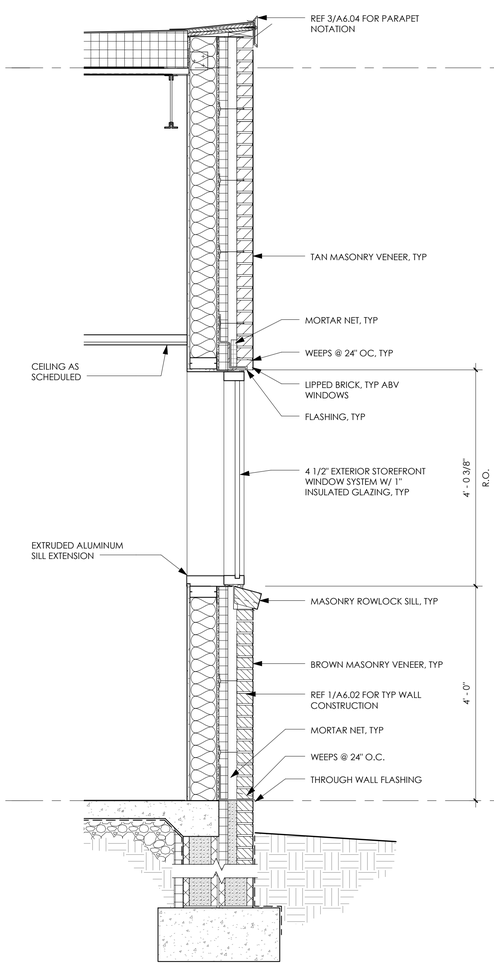

4 A6.04 WALL SECTION
3/4" = 1'-0"

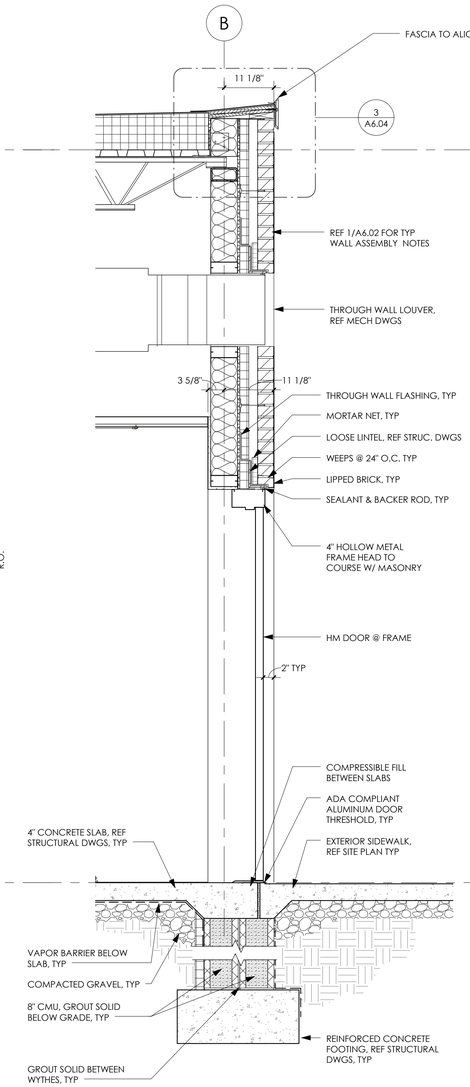

2 A6.04 WALL SECTION
3/4" = 1'-0"

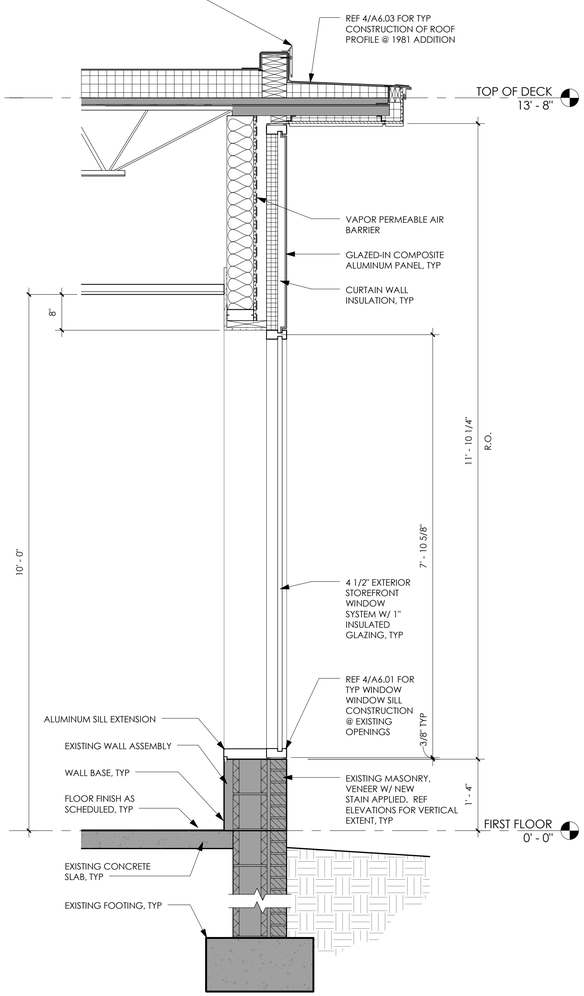

1 A6.04 WALL SECTION
3/4" = 1'-0"

ENTEROS DESIGN
314 EXCHANGE ALLEY
PETERSBURG, VA 23804
804.861.1200 P
804.861.1253 F

All ideas, designs, arrangements and plans indicated or represented by this drawing are property of ENTEROS DESIGN, PC; created, evolved and developed for the sole use of this project. These ideas, design arrangements and/or plans shall not be used by or disclosed to any person, firm or corporation for any purpose without written permission from ENTEROS DESIGN, PC. Written dimensions on these drawings shall have precedence over scaled dimensions. Contractors shall verify and be responsible for all dimensions and conditions on the job. The Architect must be notified of any variations from the dimensions and conditions shown on these drawings.
© 2016 ENTEROS DESIGN, PC

WILLIAMSON ROAD LIBRARY
3837 Williamson Road, Roanoke, VA 24012

CONSTRUCTION DOCUMENTS

REVISIONS:

WALL SECTIONS

PROJ. NO.:156003 DRAWN BY:TRF
DATE: 04.13.16

COMMONWEALTH OF VIRGINIA
GILES POLICKOVSKY ENCINGER
Lic. No. 011615
4/13/16
ARCHITECT

A6.04

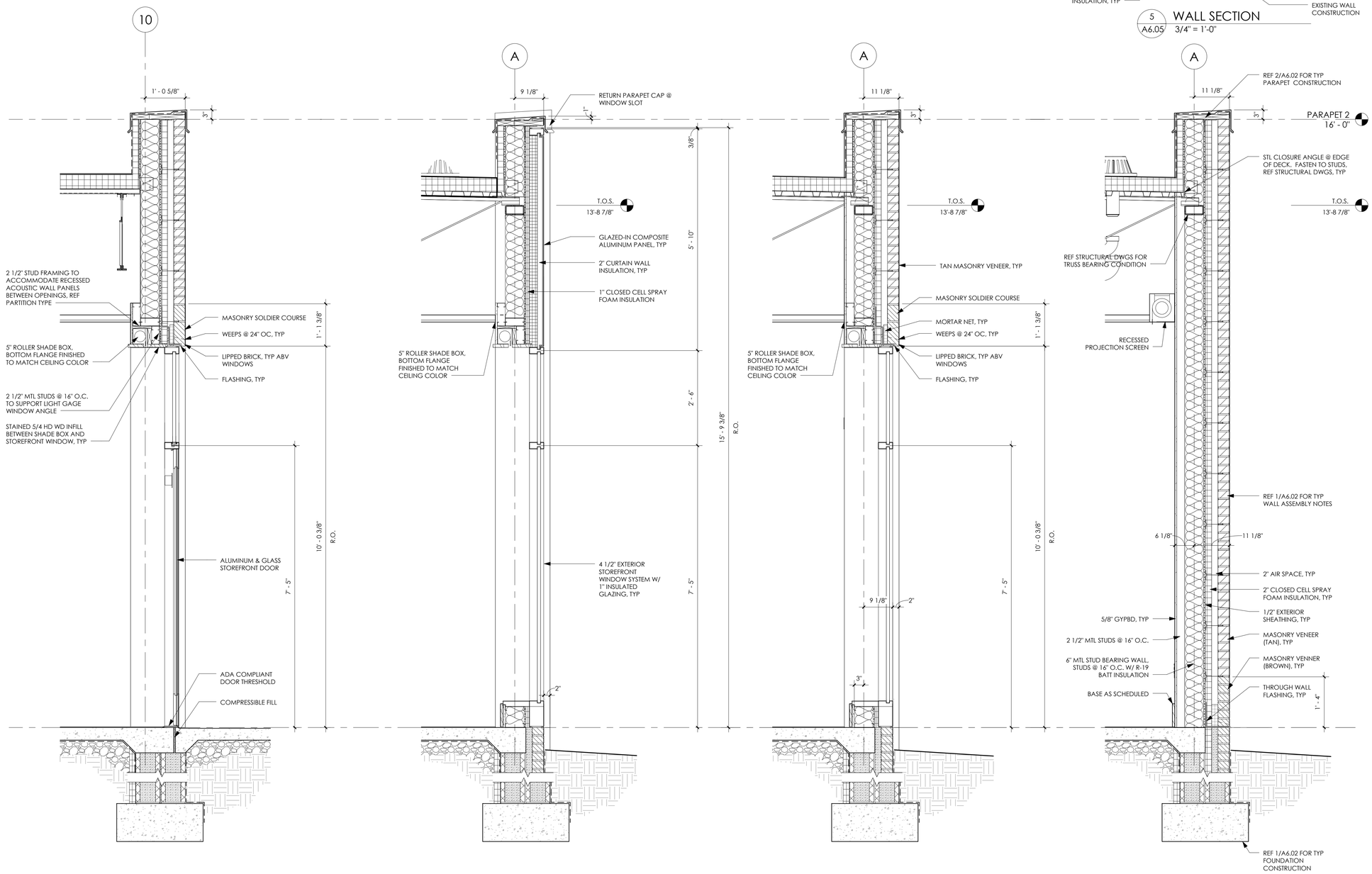

4 A6.05 WALL SECTION
3/4" = 1'-0"

3 A6.05 WALL SECTION
3/4" = 1'-0"

2 A6.05 WALL SECTION
3/4" = 1'-0"

1 A6.05 WALL SECTION
3/4" = 1'-0"

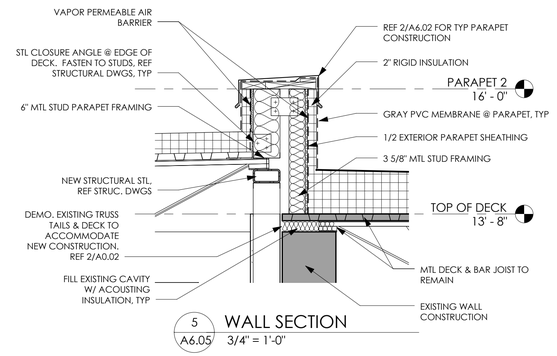

5 A6.05 WALL SECTION
3/4" = 1'-0"

ENTEROS DESIGN
314 EXCHANGE ALLEY
PETERSBURG, VA 23804
804.861.1200 P
804.861.1253 F

All ideas, designs, arrangements and plans indicated or represented by this drawing are property of ENTEROS DESIGN, PC; created, evolved and developed for the sole use of this project. These ideas, design arrangements and/or plans shall not be used by or disclosed to any person, firm or corporation for any purpose without written permission from ENTEROS DESIGN, PC. Written dimensions on these drawings shall have precedence over scaled dimensions. Contractors shall verify and be responsible for all dimensions and conditions on the job. The Architect must be notified of any variations from the dimensions and conditions shown on these drawings.
© 2016 ENTEROS DESIGN, PC

WILLIAMSON ROAD LIBRARY

3837 Williamson Road, Roanoke, VA 24012

CONSTRUCTION DOCUMENTS

REVISIONS:

WALL SECTIONS

PROJ. NO.:156003 DRAWN BY:TRF
DATE: 04.13.16

COMMONWEALTH OF VIRGINIA
GILBERT WILBURN ENTZMINGER
Lic. No. 011615
4/13/16
ARCHITECT

A6.05

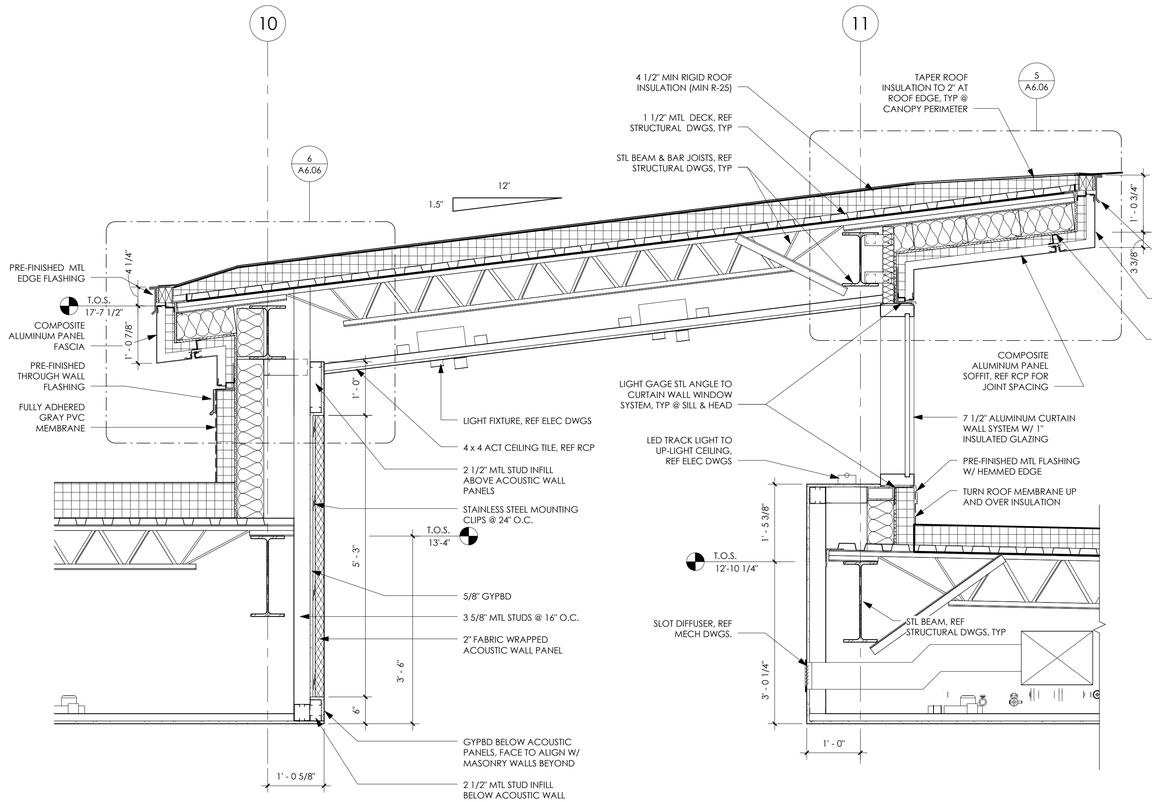

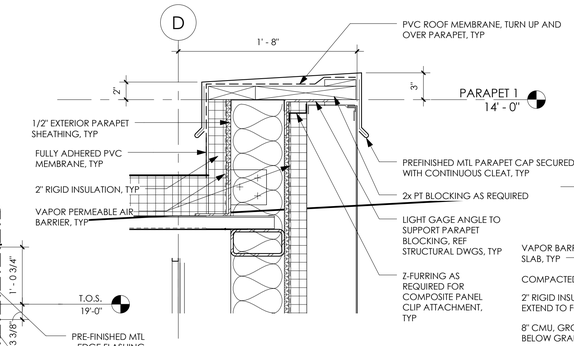

4 A6.06 SECTION DETAIL
1 1/2" = 1'-0"

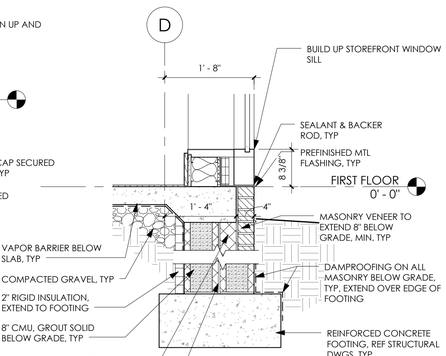

2 A6.06 WALL SECTION
3/4" = 1'-0"

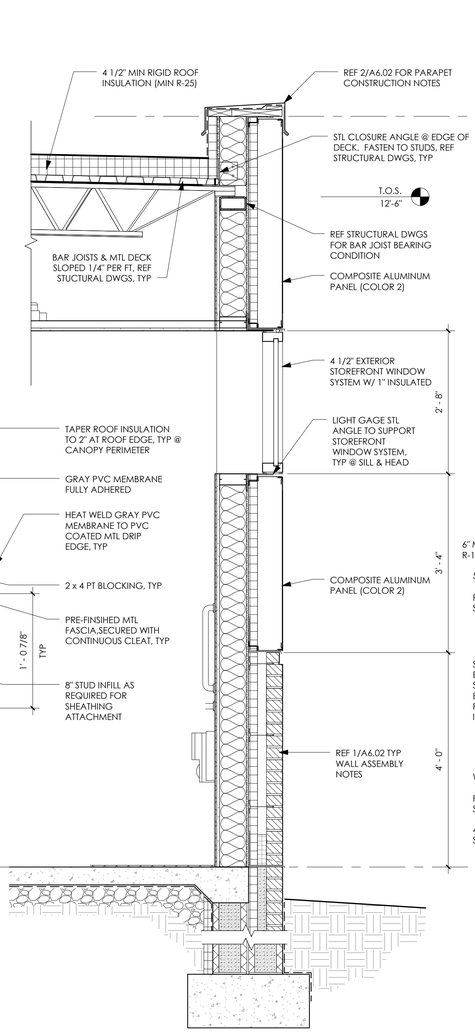

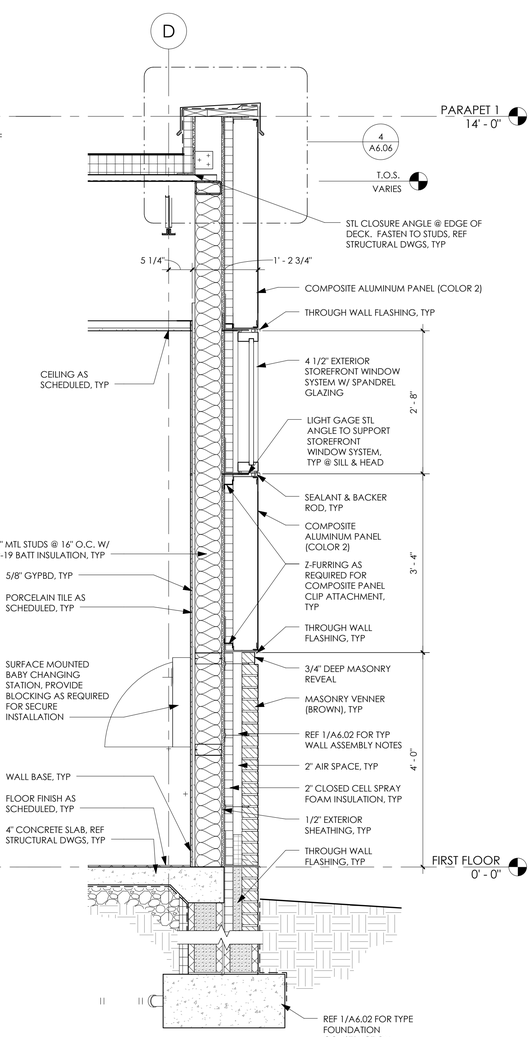

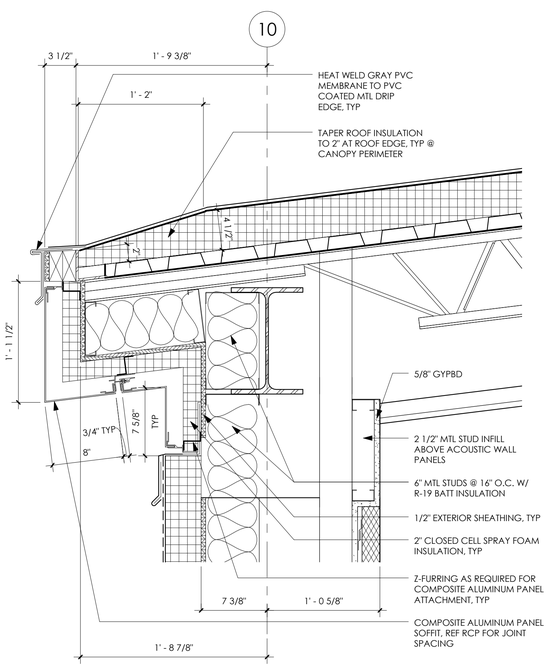

6 A6.06 SECTION DETAIL
1 1/2" = 1'-0"

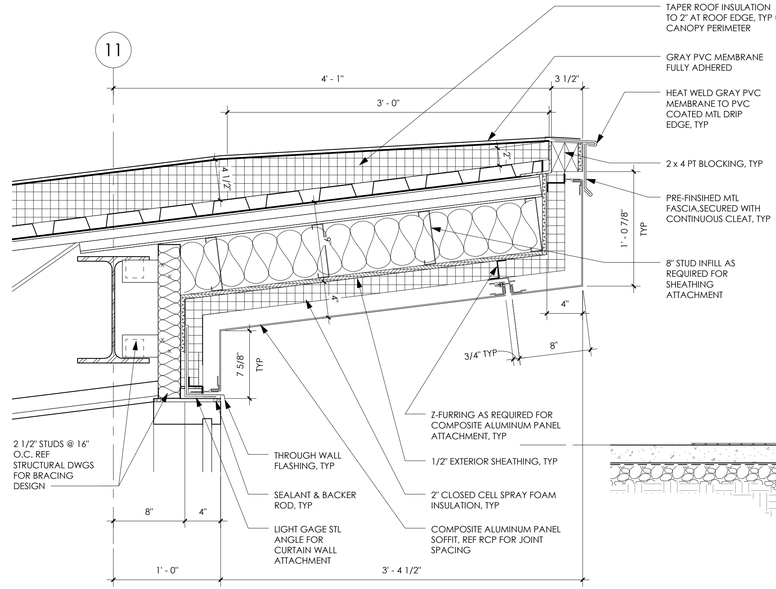

5 A6.06 SECTION DETAIL
1 1/2" = 1'-0"

3 A6.06 WALL SECTION
3/4" = 1'-0"

1 A6.06 WALL SECTION
3/4" = 1'-0"

ENTEROS DESIGN

314 EXCHANGE ALLEY
PETERSBURG, VA 23804

804.861.1200 P
804.861.1253 F

All ideas, designs, arrangements and plans indicated or represented by this drawing are property of ENTEROS DESIGN, PC; created, evolved and developed for the sole use of this project. These ideas, design arrangements and/or plans shall not be used by or disclosed to any person, firm or corporation for any purpose without written permission from ENTEROS DESIGN, PC. Written dimensions on these drawings shall have precedence over scaled dimensions. Contractors shall verify and be responsible for all dimensions and conditions on the job. The Architect must be notified of any variations from the dimensions and conditions shown on these drawings.
© 2016 ENTEROS DESIGN, PC

WILLIAMSON ROAD LIBRARY

3837 Williamson Road, Roanoke, VA 24012

CONSTRUCTION DOCUMENTS

REVISIONS:

WALL SECTIONS

PROJ. NO.:156003 DRAWN BY:TRF
DATE: 04.13.16

COMMONWEALTH OF VIRGINIA
GILBERT WILBURN ENZINGER
Lic. No. 011615
4/13/16
ARCHITECT

A6.06

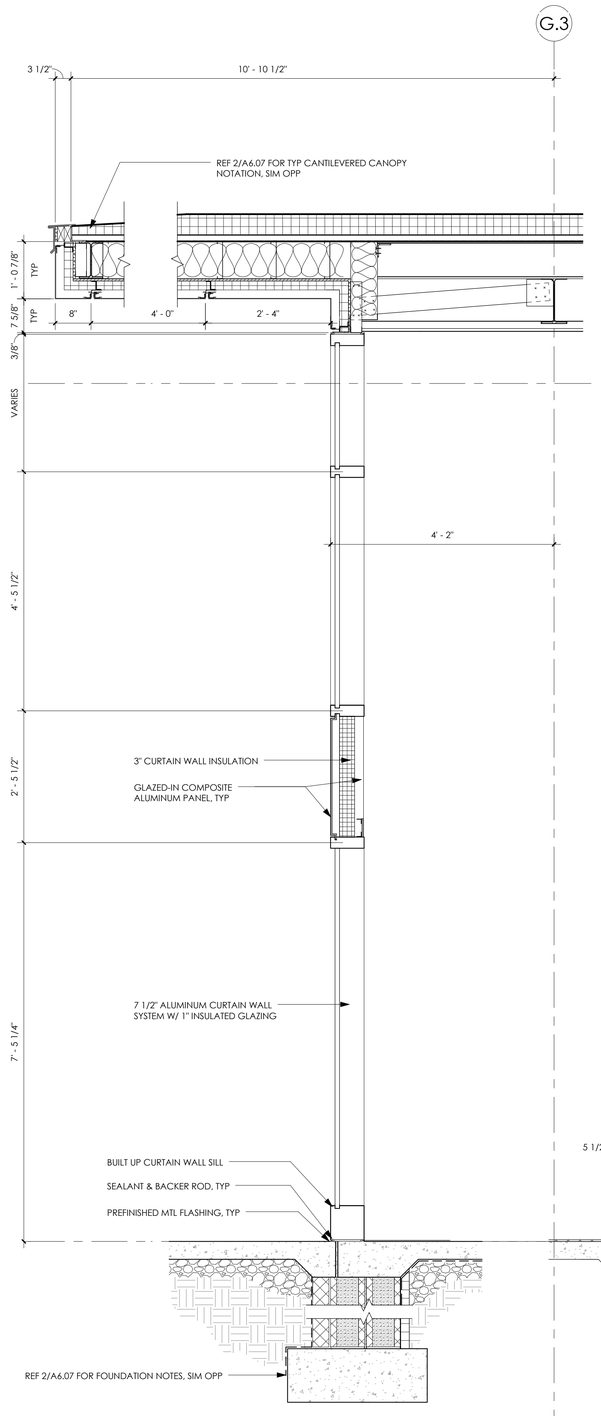

3 A6.07 WALL SECTION
3/4" = 1'-0"

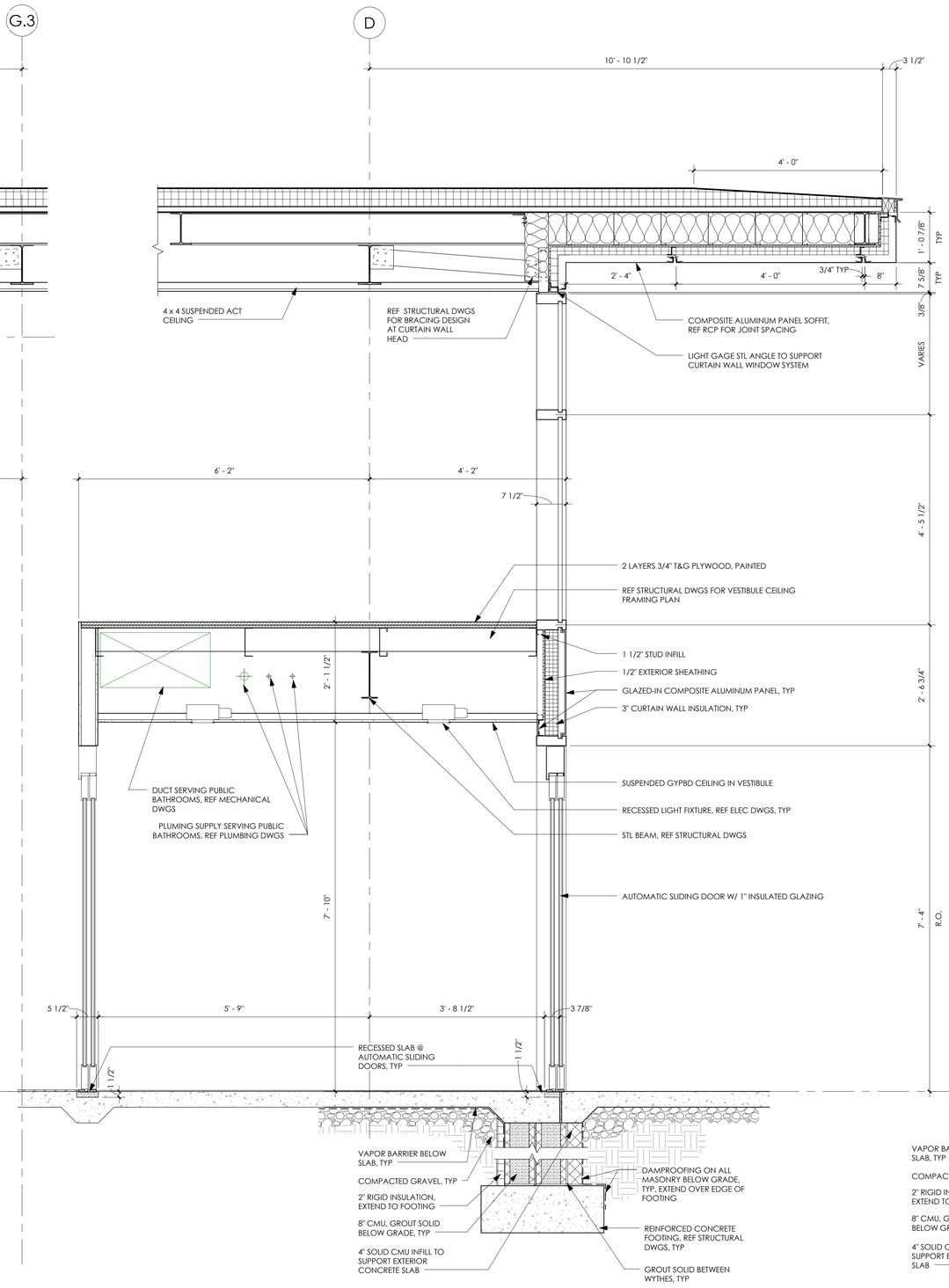

2 A6.07 WALL SECTION
3/4" = 1'-0"

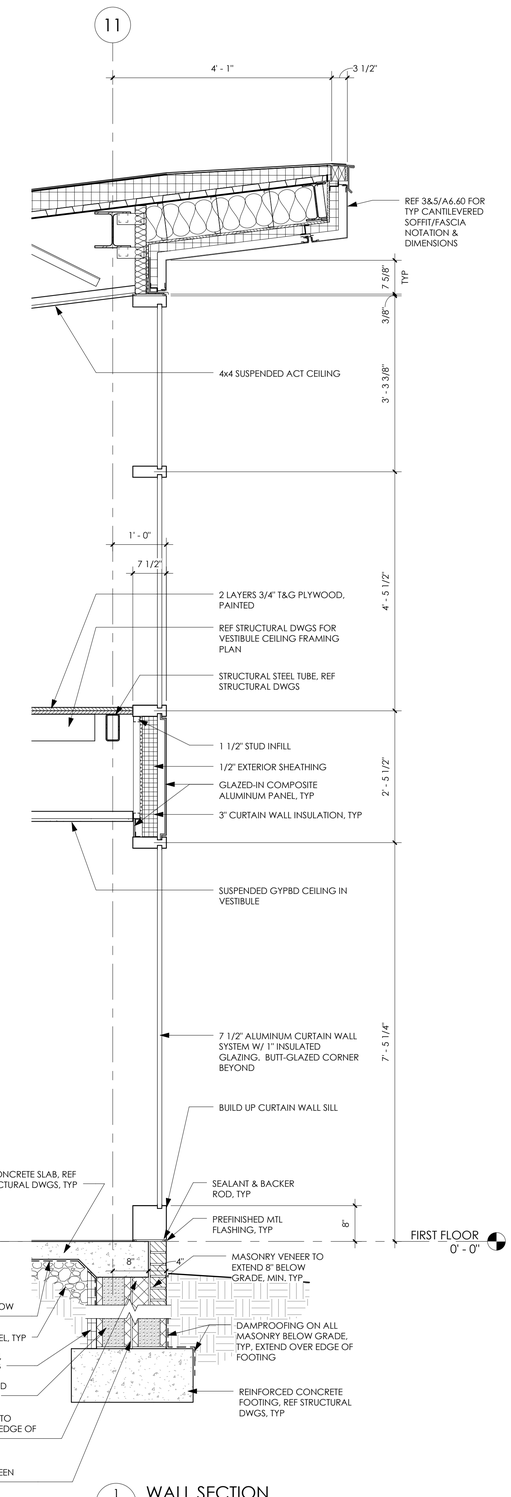

1 A6.07 WALL SECTION
3/4" = 1'-0"

ENTEROS DESIGN

314 EXCHANGE ALLEY
PETERSBURG, VA 23804

804.861.1200 P
804.861.1253 F

All ideas, designs, arrangements and plans indicated or represented by this drawing are property of ENTEROS DESIGN, PC; created, evolved and developed for the sole use of this project. These ideas, design arrangements and/or plans shall not be used by or disclosed to any person, firm or corporation for any purpose without written permission from ENTEROS DESIGN, PC. Written dimensions on these drawings shall have precedence over scaled dimensions. Contractors shall verify and be responsible for all dimensions and conditions on the job. The Architect must be notified of any variations from the dimensions and conditions shown on these drawings.
© 2016 ENTEROS DESIGN, PC

WILLIAMSON ROAD LIBRARY

3837 Williamson Road, Roanoke, VA 24012

CONSTRUCTION DOCUMENTS

REVISIONS:

WALL SECTIONS

PROJ. NO.:156003 DRAWN BY:TRF
DATE: 04.13.16

COMMONWEALTH OF VIRGINIA
GILBERT WILBURN ENTZMINGER
Lic. No. 011615
4/13/16
ARCHITECT

A6.07

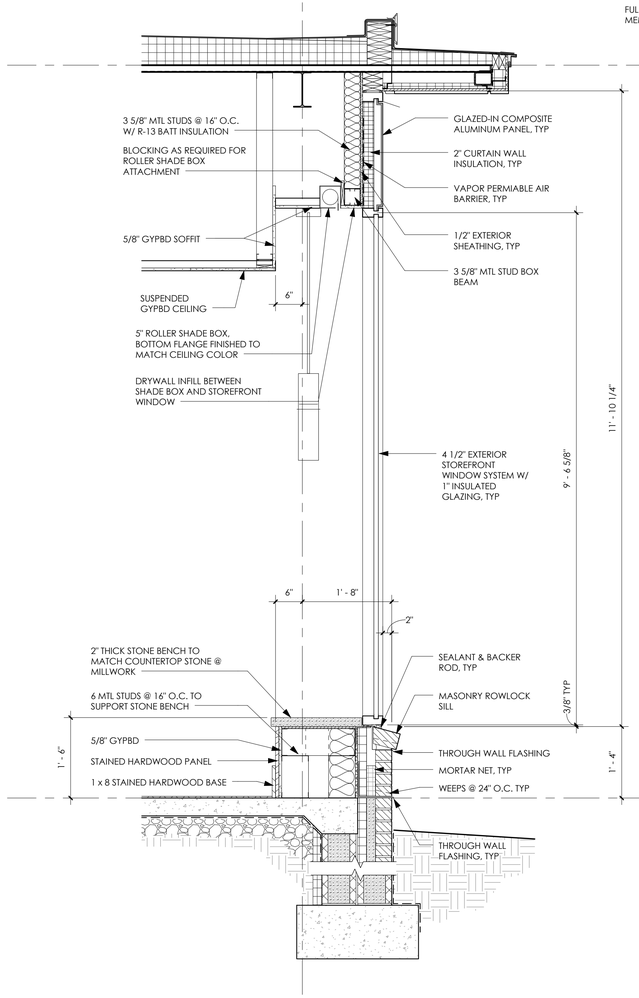

5 A6.08 WALL SECTION
3/4" = 1'-0"

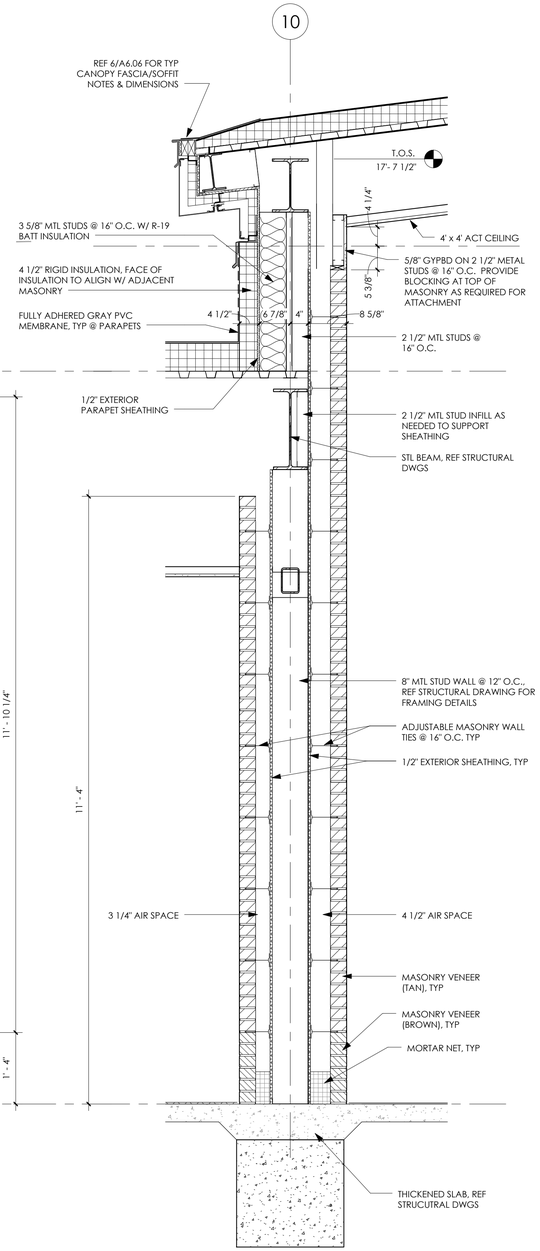

4 A6.08 WALL SECTION
3/4" = 1'-0"

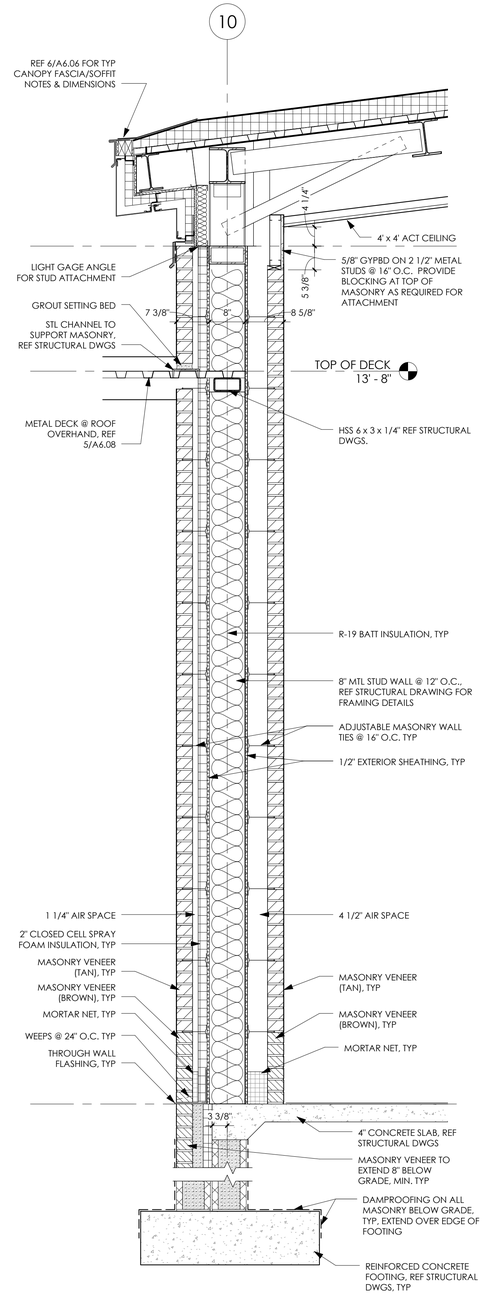

3 A6.08 WALL SECTION
3/4" = 1'-0"

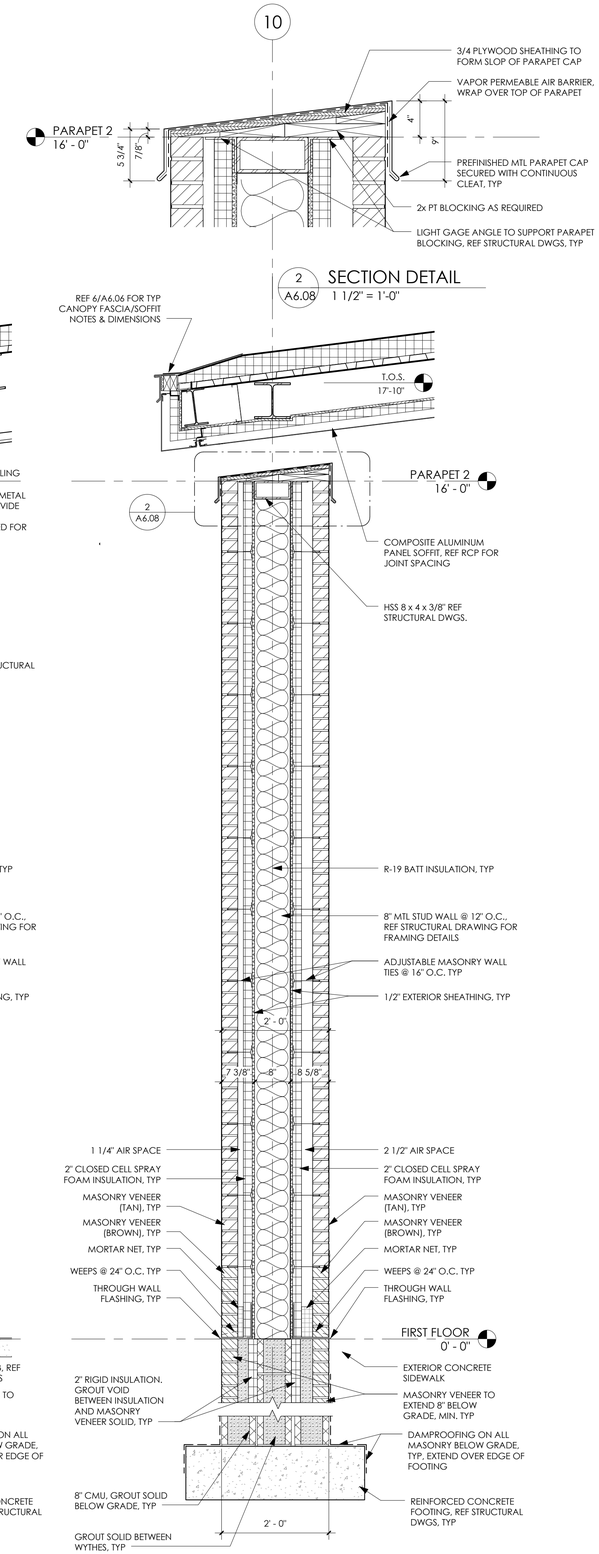

1 A6.08 WALL SECTION
3/4" = 1'-0"

ENTEROS DESIGN

314 EXCHANGE ALLEY
PETERSBURG, VA 23804

804.861.1200 P
804.861.1253 F

All ideas, designs, arrangements and plans indicated or represented by this drawing are property of ENTEROS DESIGN, PC; created, evolved and developed for the sole use of this project. These ideas, design arrangements and/or plans shall not be used by or disclosed to any person, firm or corporation for any purpose without written permission from ENTEROS DESIGN, PC. Written dimensions on these drawings shall have precedence over scaled dimensions. Contractors shall verify and be responsible for all dimensions and conditions on the job. The Architect must be notified of any variations from the dimensions and conditions shown on these drawings.
© 2016 ENTEROS DESIGN, PC

WILLIAMSON ROAD LIBRARY

3837 Williamson Road, Roanoke, VA 24012

CONSTRUCTION DOCUMENTS

REVISIONS:

WALL SECTIONS

PROJ. NO.:156003 DRAWN BY:TRF
DATE: 04.13.16

COMMONWEALTH OF VIRGINIA
GILER WILBURN ENTZMINGER
Lic. No. 011615
4/13/16
ARCHITECT

A6.08

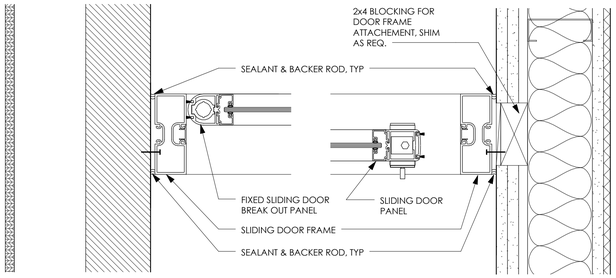

10 A7.01 PLAN DETAIL
3" = 1'-0"

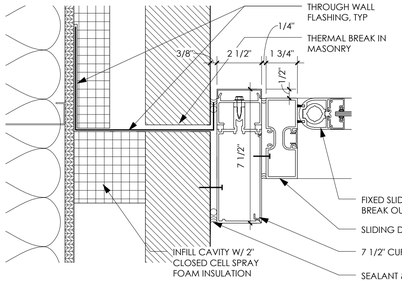

9 A7.01 PLAN DETAIL
3" = 1'-0"

5 A7.01 PLAN DETAIL
3" = 1'-0"

2 A7.01 PLAN DETAIL
3" = 1'-0"

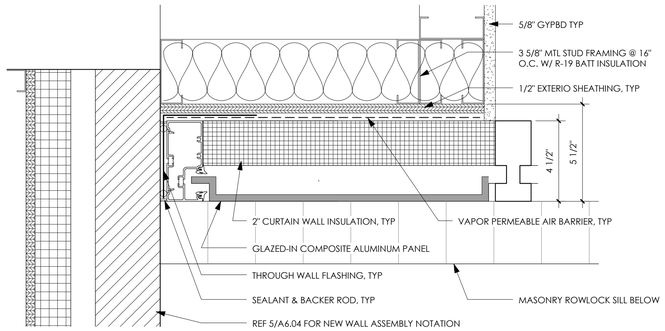

8 A7.01 PLAN DETAIL
3" = 1'-0"

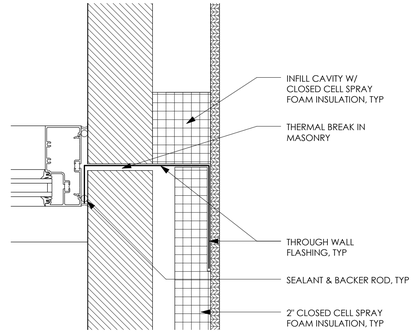

4 A7.01 PLAN DETAIL
3" = 1'-0"

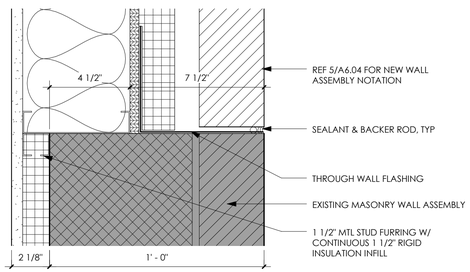

7 A7.01 PLAN DETAIL
3" = 1'-0"

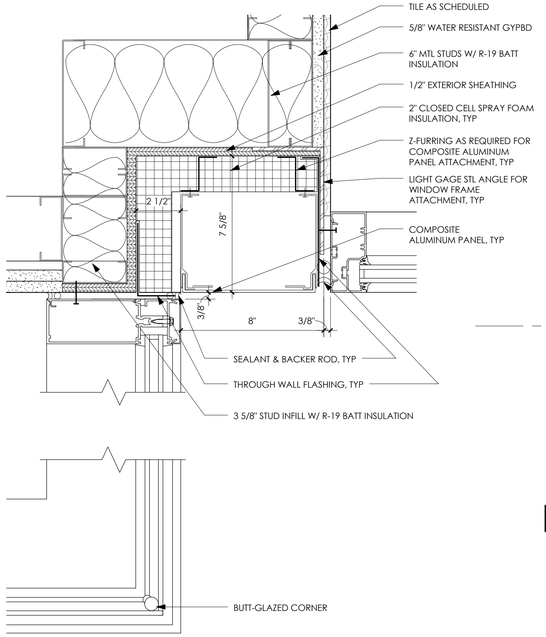

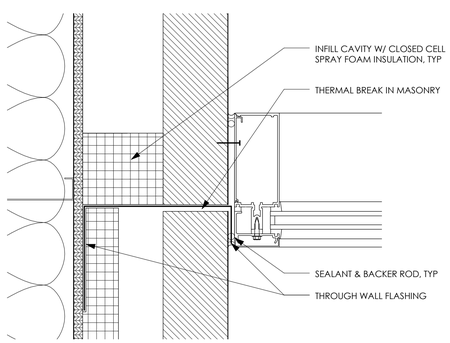

6 A7.01 PLAN DETAIL
3" = 1'-0"

3 A7.01 PLAN DETAIL
3" = 1'-0"

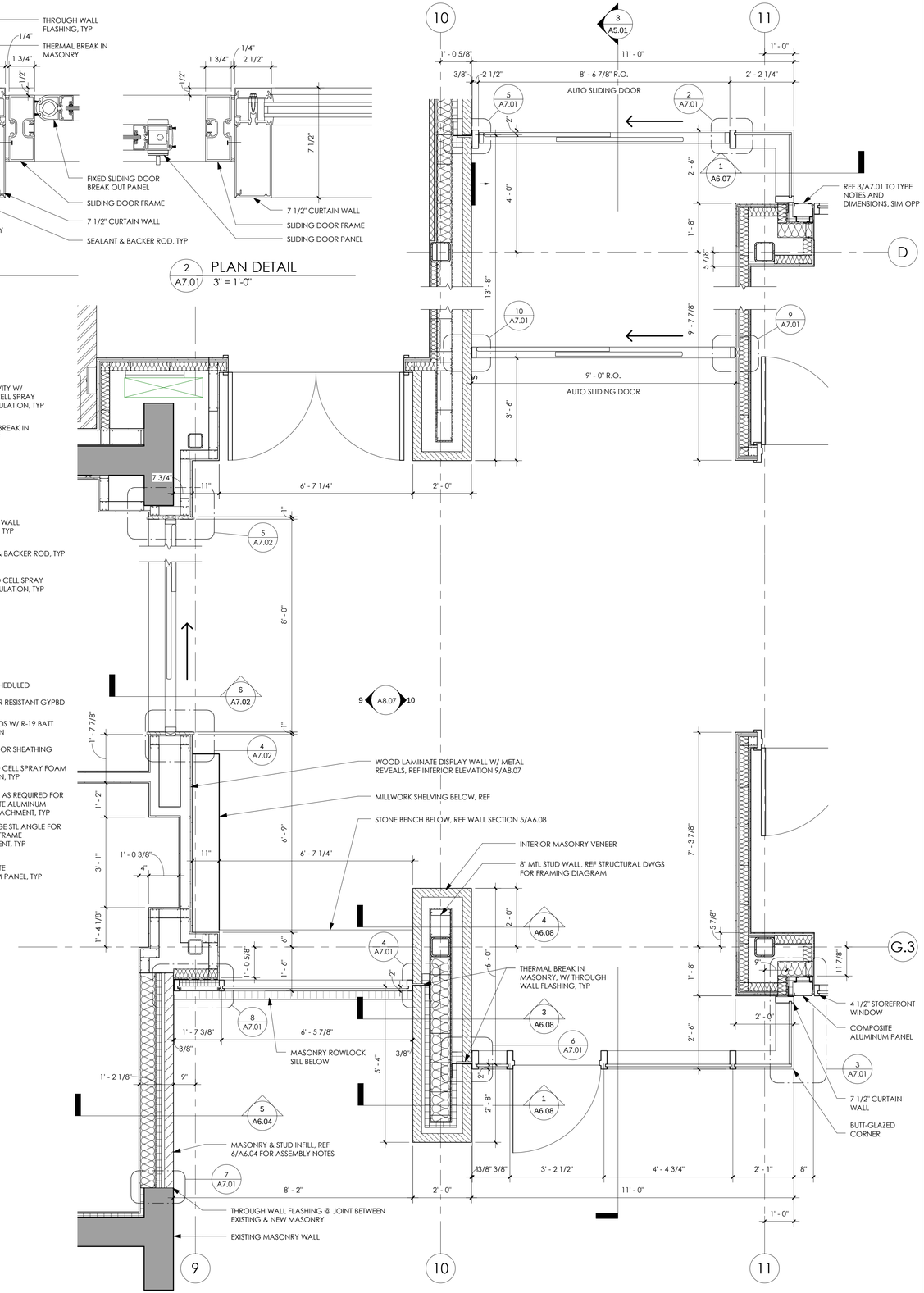

1 A7.01 ENLARGED PLAN
1/2" = 1'-0"

ENTEROS DESIGN

314 EXCHANGE ALLEY
PETERSBURG, VA 23804

804.861.1200 P
804.861.1253 F

All ideas, designs, arrangements and plans indicated or represented by this drawing are property of ENTEROS DESIGN, PC; created, evolved and developed for the sole use of this project. These ideas, design arrangements and/or plans shall not be used by or disclosed to any person, firm or corporation for any purpose without written permission from ENTEROS DESIGN, PC. Written dimensions on these drawings shall have precedence over scaled dimensions. Contractors shall verify and be responsible for all dimensions and conditions on the job. The Architect must be notified of any variations from the dimensions and conditions shown on these drawings.
© 2016 ENTEROS DESIGN, PC

WILLIAMSON ROAD LIBRARY

3837 Williamson Road, Roanoke, VA 24012

CONSTRUCTION DOCUMENTS

REVISIONS:

PLAN DETAILS

PROJ. NO.:156003 DRAWN BY:TRF
DATE: 04.13.16

COMMONWEALTH OF VIRGINIA
GILBERT WILBURN WEMINGER
Lic. No. 011615
4/13/16
ARCHITECT

A7.01

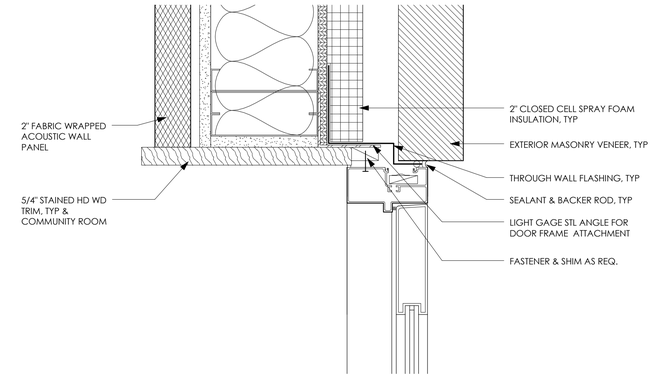

3 A7.02 PLAN DETAIL
3" = 1'-0"

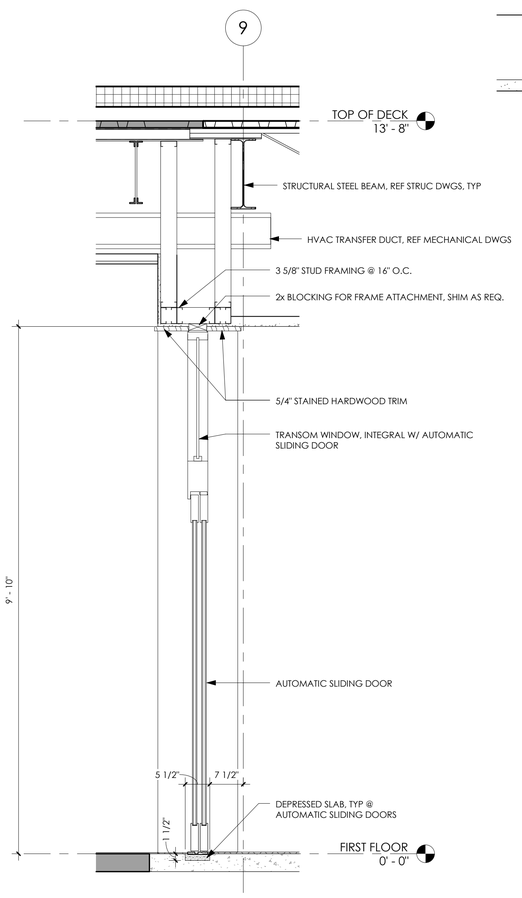

6 A7.02 WALL SECTION
3/4" = 1'-0"

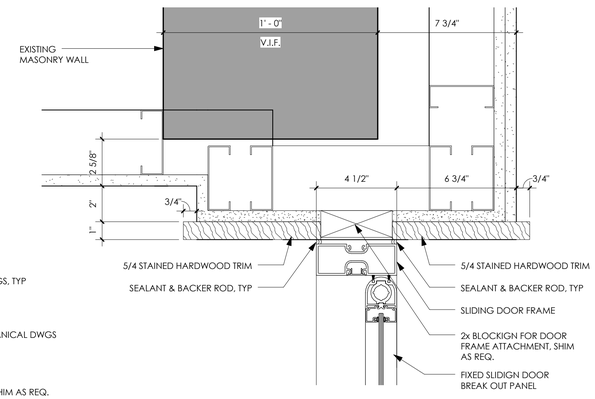

5 A7.02 PLAN DETAIL
3" = 1'-0"

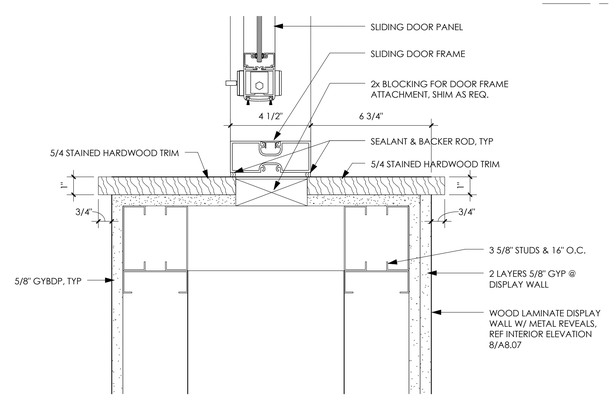

4 A7.02 PLAN DETAIL
3" = 1'-0"

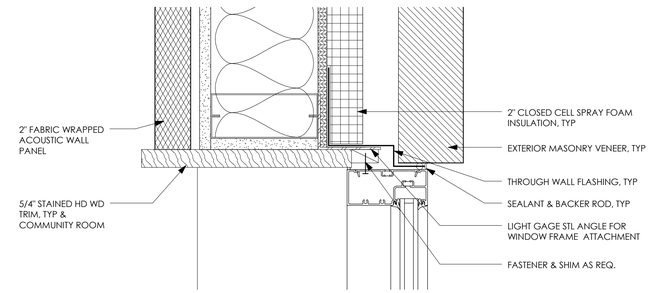

2 A7.02 PLAN DETAIL
3" = 1'-0"

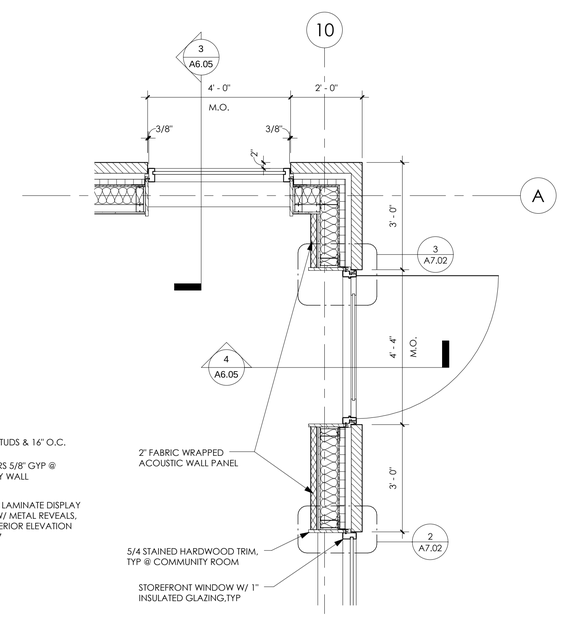

1 A7.02 ENLARGED PLAN
1/2" = 1'-0"

ENTEROS DESIGN
314 EXCHANGE ALLEY
PETERSBURG, VA 23804
804.861.1200 P
804.861.1253 F

All ideas, designs, arrangements and plans indicated or represented by this drawing are property of ENTEROS DESIGN, PC; created, evolved and developed for the sole use of this project. These ideas, design arrangements and/or plans shall not be used by or disclosed to any person, firm or corporation for any purpose without written permission from ENTEROS DESIGN, PC. Written dimensions on these drawings shall have precedence over scaled dimensions. Contractors shall verify and be responsible for all dimensions and conditions on the job. The Architect must be notified of any variations from the dimensions and conditions shown on these drawings.
© 2016 ENTEROS DESIGN, PC

WILLIAMSON ROAD LIBRARY
3837 Williamson Road, Roanoke, VA 24012

CONSTRUCTION DOCUMENTS

REVISIONS:

PLAN DETAILS

PROJ. NO.:156003 DRAWN BY:TRF
DATE: 04.13.16

COMMONWEALTH OF VIRGINIA
GILLETT WILLIAMS ENTERIOS
Lic. No. 011615
4/13/16
ARCHITECT

A7.02

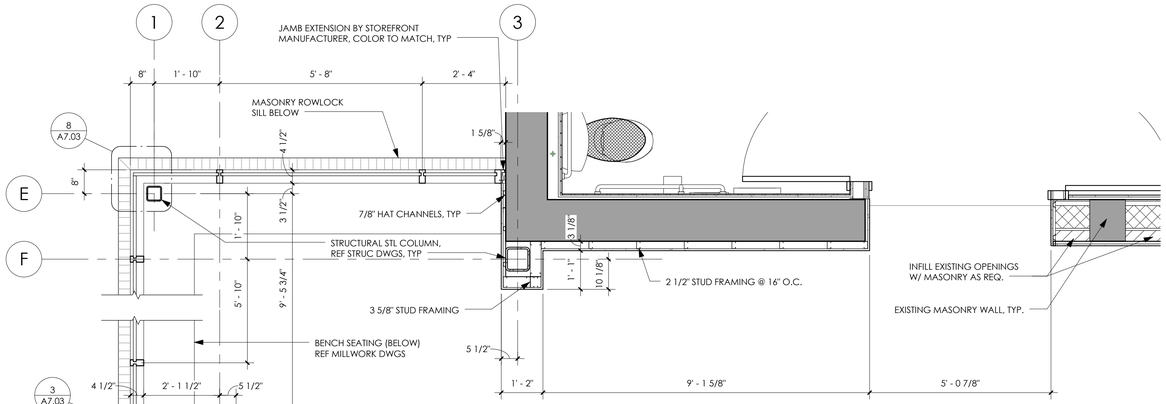

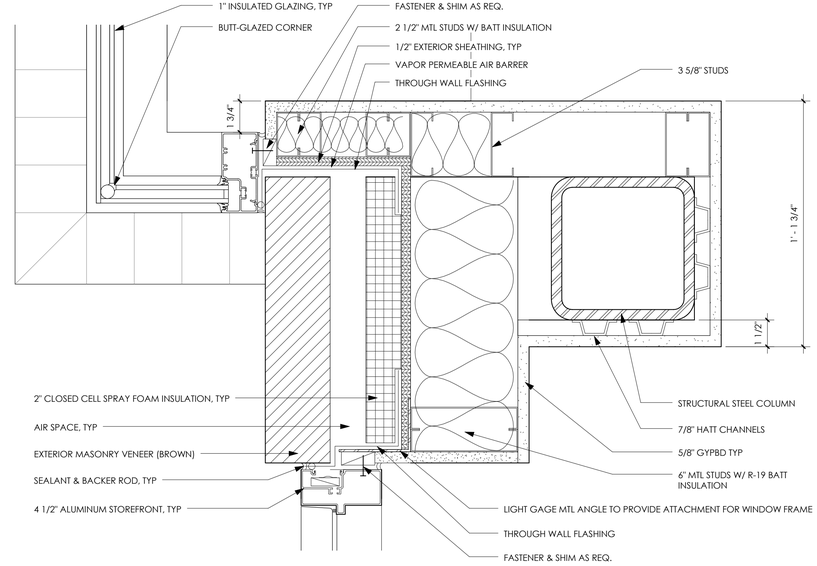

3 A7.03 PLAN DETAIL
3" = 1'-0"

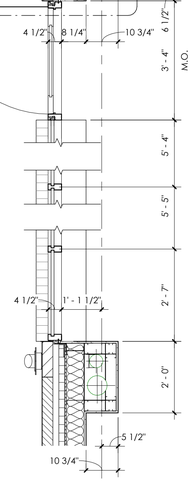

9 A7.03 ENLARGED PLAN
1/2" = 1'-0"

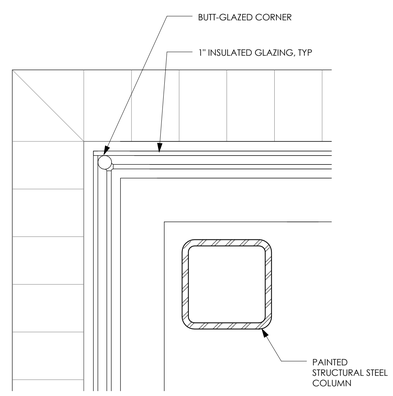

8 A7.03 PLAN DETAIL
3" = 1'-0"

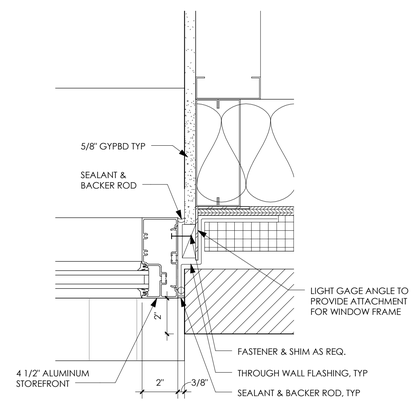

6 A7.03 PLAN DETAIL
3" = 1'-0"

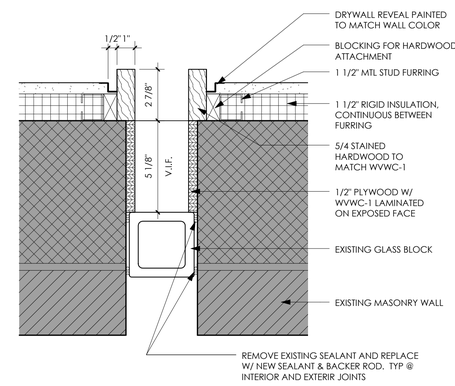

5 A7.03 PLAN DETAIL
3" = 1'-0"

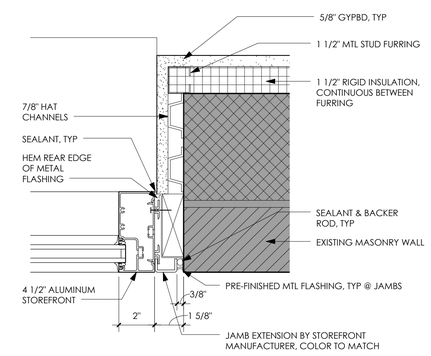

2 A7.03 PLAN DETAIL
3" = 1'-0"

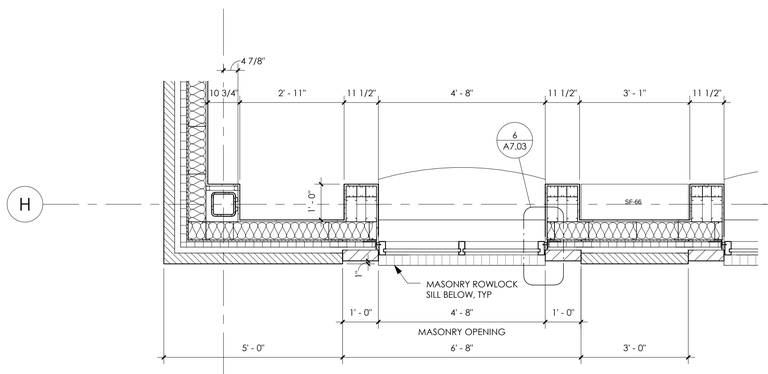

2

7 A7.03 ENLARGED PLAN
1/2" = 1'-0"

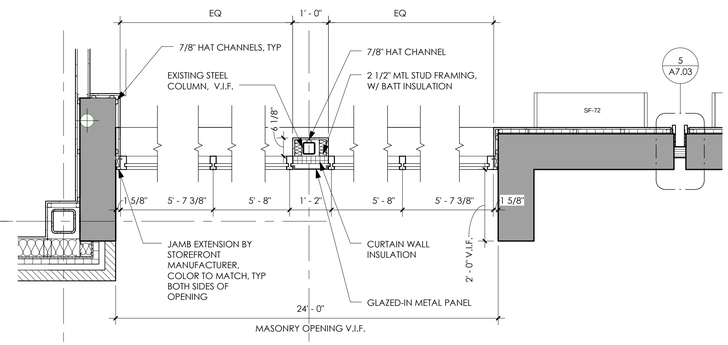

4 e5.1

4 A7.03 ENLARGED PLAN
1/2" = 1'-0"

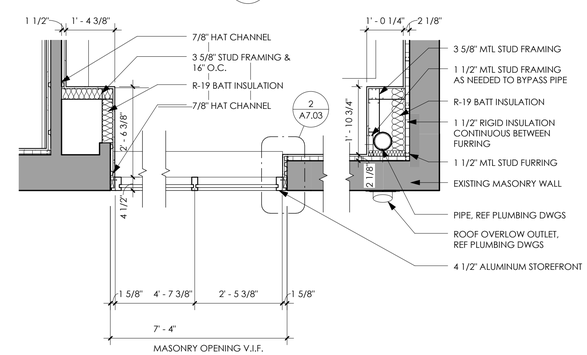

1 A7.03 ENLARGED PLAN
1/2" = 1'-0"

ENTEROS DESIGN

314 EXCHANGE ALLEY
PETERSBURG, VA 23804

804.861.1200 P
804.861.1253 F

All ideas, designs, arrangements and plans indicated or represented by this drawing are property of ENTEROS DESIGN, PC; created, evolved and developed for the sole use of this project. These ideas, design arrangements and/or plans shall not be used by or disclosed to any person, firm or corporation for any purpose without written permission from ENTEROS DESIGN, PC. Written dimensions on these drawings shall have precedence over scaled dimensions. Contractors shall verify and be responsible for all dimensions and conditions on the job. The Architect must be notified of any variations from the dimensions and conditions shown on these drawings.
© 2016 ENTEROS DESIGN, PC

WILLIAMSON ROAD LIBRARY

3837 Williamson Road, Roanoke, VA 24012

CONSTRUCTION DOCUMENTS

REVISIONS:

PLAN DETAILS

PROJ. NO.:156003 DRAWN BY:TRF
DATE: 04.13.16

COMMONWEALTH OF VIRGINIA
GILBERT WILBURN ENTZMINGER
Lic. No. 011615
4/13/16
ARCHITECT

A7.03

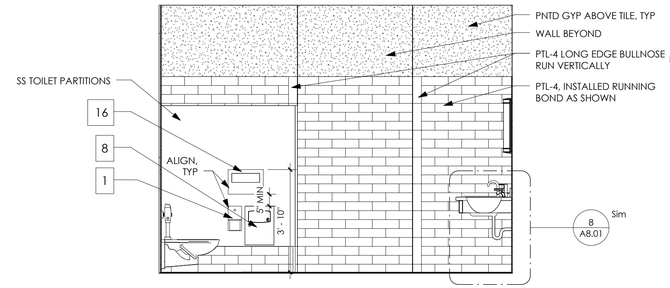

7 A8.01 INTERIOR ELEVATION 3/8" = 1'-0"

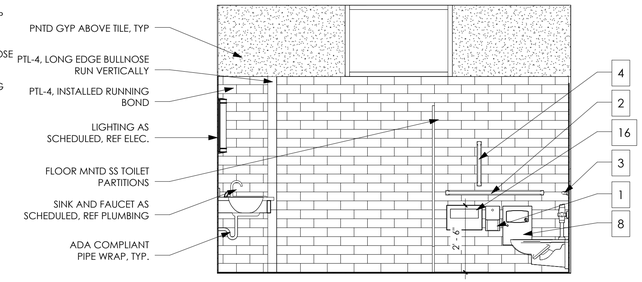

5 A8.01 INTERIOR ELEVATION 3/8" = 1'-0"

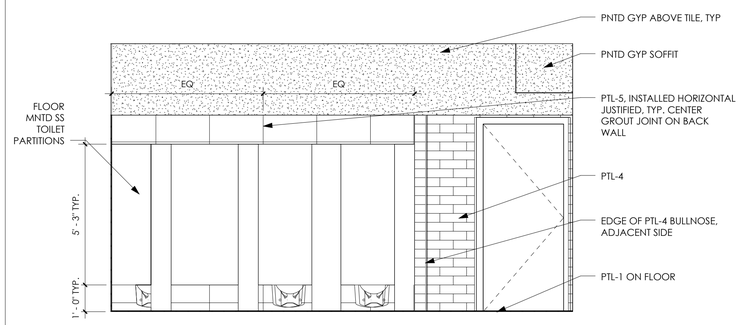

6 A8.01 INTERIOR ELEVATION 3/8" = 1'-0"

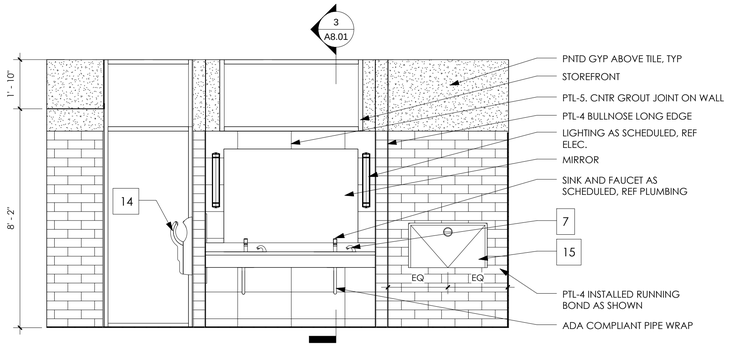

4 A8.01 INTERIOR ELEVATION 3/8" = 1'-0"

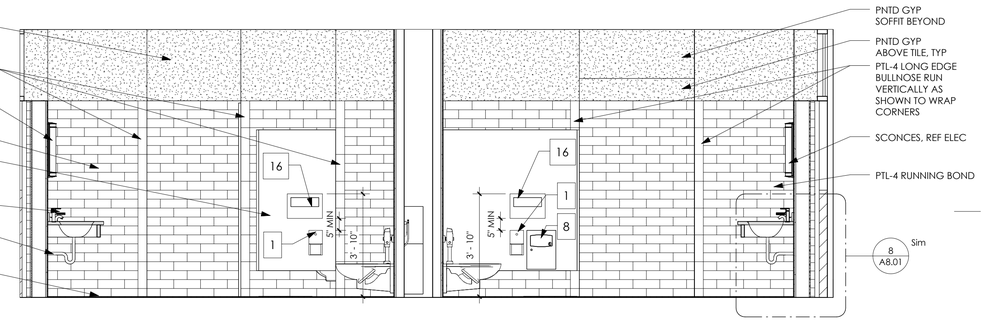

3 A8.01 PUBLIC RESTROOM SINK SECTION 3/8" = 1'-0"

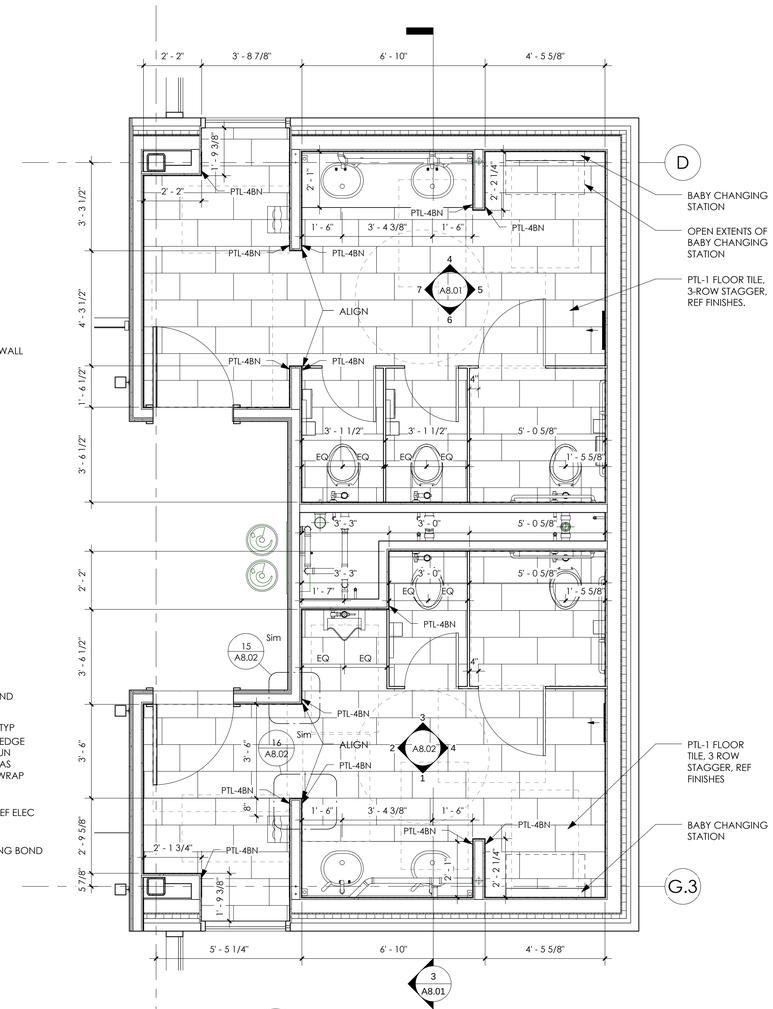

2 A8.01 ENLARGED PLAN-PUBLIC RESTROOMS 3/8" = 1'-0"

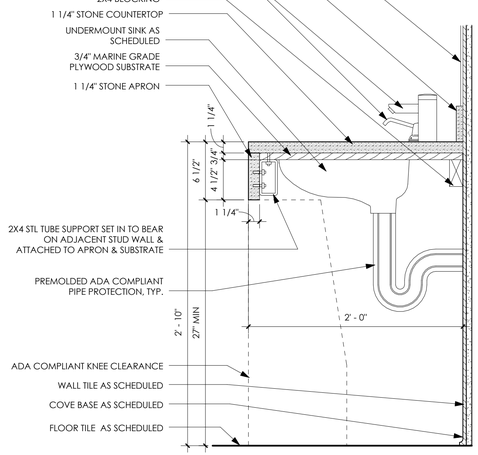

8 A8.01 SINK SECTION 1 1/2" = 1'-0"

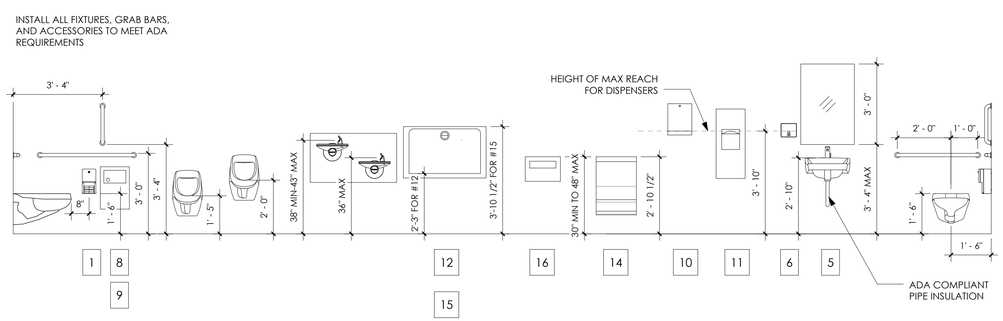

1 A8.01 TOILET ACCESSORY LEGEND 3/8" = 1'-0"

TOILET ACCESSORY LEGEND

1	SS SURFACE MOUNTED TISSUE DISPENSER	9	SS RECESSED SANITARY DISPOSAL
2	HORIZONTAL SS GRAB BAR (3'-6")	10	SS PAPER TOWEL DISPENSER
3	HORIZONTAL SS GRAB BAR (3'-0")	11	SS RECESSED PAPER TOWEL DISPENSER AND WASTE RECEPTICAL
4	VERTICAL SS GRAB BAR (1'-6")	12	SS RECESSED BABY CHANGING STATION
5	SS FRAMED MIRROR	13	MOP & BROOM HOLDER
6	SS SOAP DISPENSER	14	HAND DRYER
7	SS UNDER COUNTER SOAP DISPENSER	15	SS SURFACE MOUNTED BABY CHANGING STATION
8	SS SANITARY DISPOSAL	16	SS SURFACE MOUNTED TOILET SEAT COVER DISPENSER

ENTEROS DESIGN

314 EXCHANGE ALLEY
PETERSBURG, VA 23804

804.861.1200 P
804.861.1253 F

All ideas, designs, arrangements and plans indicated or represented by this drawing are property of ENTEROS DESIGN, PC; created, evolved and developed for the sole use of this project. These ideas, design arrangements and/or plans shall not be used by or disclosed to any person, firm or corporation for any purpose without written permission from ENTEROS DESIGN, PC. Written dimensions on these drawings shall have precedence over scaled dimensions. Contractors shall verify and be responsible for all dimensions and conditions on the job. The Architect must be notified of any variations from the dimensions and conditions shown on these drawings.
© 2016 ENTEROS DESIGN, PC

WILLIAMSON ROAD LIBRARY

3837 Williamson Road, Roanoke, VA 24012

CONSTRUCTION DOCUMENTS

REVISIONS:

BATHROOM PLANS & ELEVATIONS

PROJ. NO.:156003 DRAWN BY:BB
DATE: 04.13.16

COMMONWEALTH OF VIRGINIA
GILBERT WILBURN WEMMINGER
Lic. No. 011615
4/13/16
ARCHITECT

A8.01

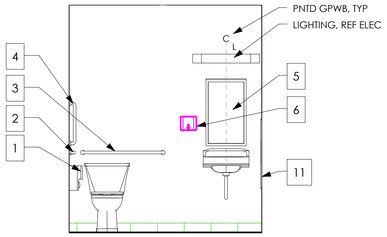

14 A8.02 INTERIOR ELEVATION
3/8" = 1'-0"

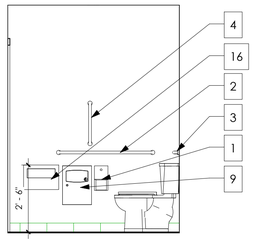

13 A8.02 INTERIOR ELEVATION
3/8" = 1'-0"

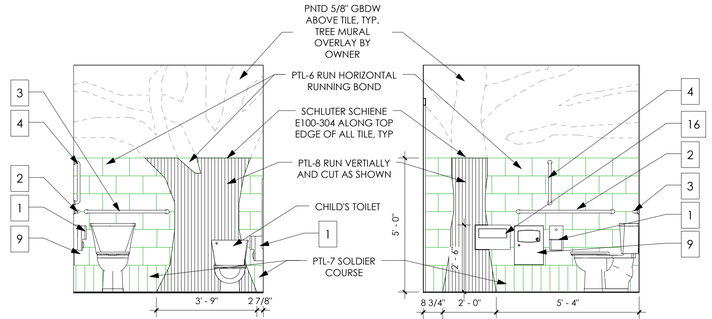

9 A8.02 INTERIOR ELEVATION
3/8" = 1'-0"

8 A8.02 INTERIOR ELEVATION
3/8" = 1'-0"

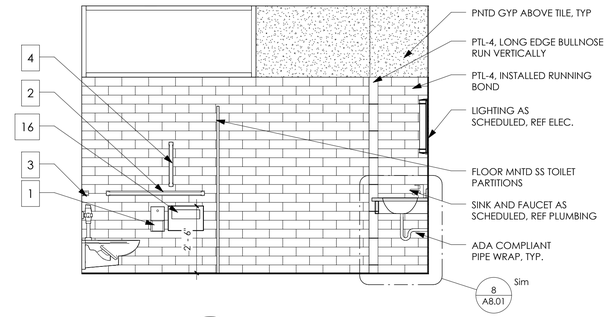

4 A8.02 INTERIOR ELEVATION
3/8" = 1'-0"

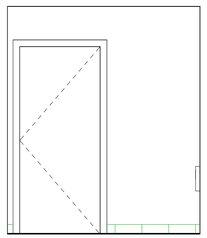

12 A8.02 INTERIOR ELEVATION
3/8" = 1'-0"

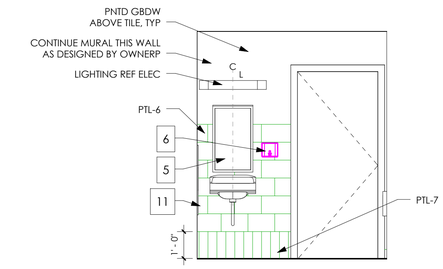

7 A8.02 INTERIOR ELEVATION
3/8" = 1'-0"

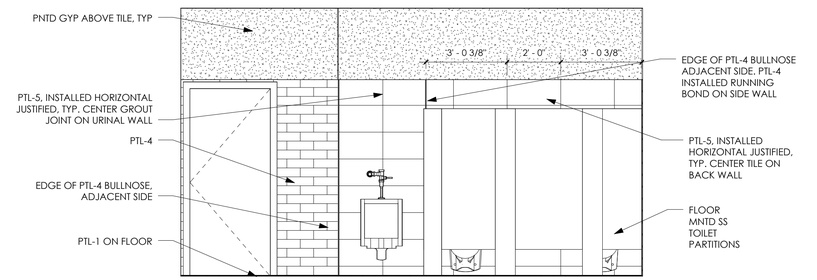

3 A8.02 INTERIOR ELEVATION
3/8" = 1'-0"

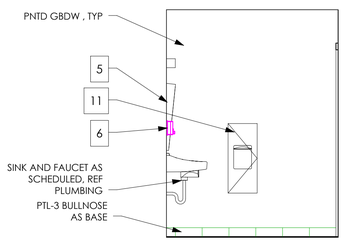

11 A8.02 INTERIOR ELEVATION
3/8" = 1'-0"

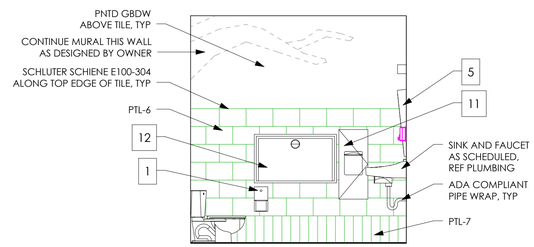

6 A8.02 INTERIOR ELEVATION
3/8" = 1'-0"

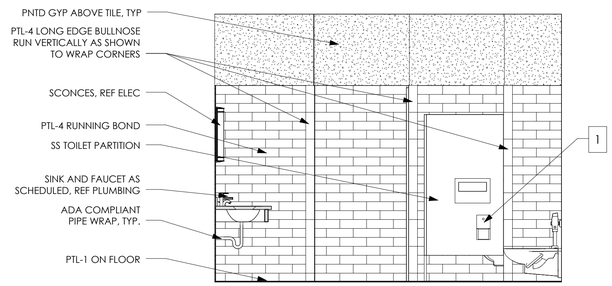

2 A8.02 INTERIOR ELEVATION
3/8" = 1'-0"

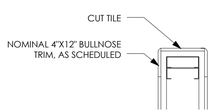

16 A8.02 TILE END WALL DETAIL
1 1/2" = 1'-0"

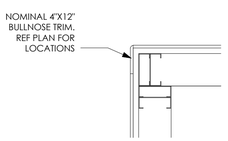

15 A8.02 TILE CORNER DETAIL
1 1/2" = 1'-0"

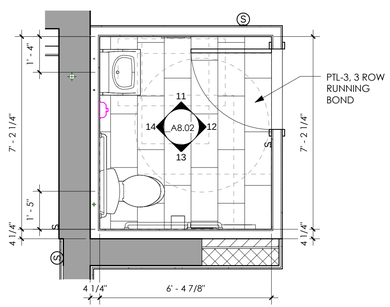

10 A8.02 ENLARGED PLAN-STAFF BATH
3/8" = 1'-0"

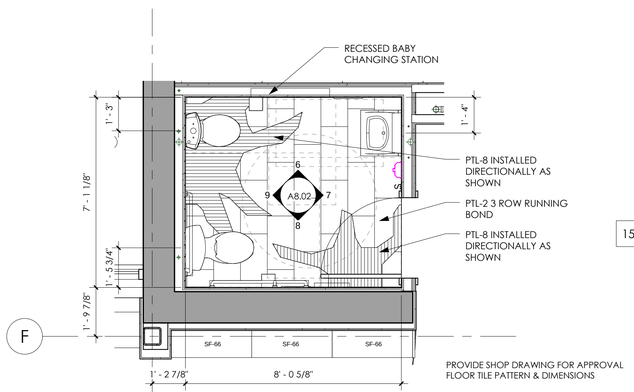

3

5 A8.02 ENLARGED PLAN-FAMILY BATH
3/8" = 1'-0"

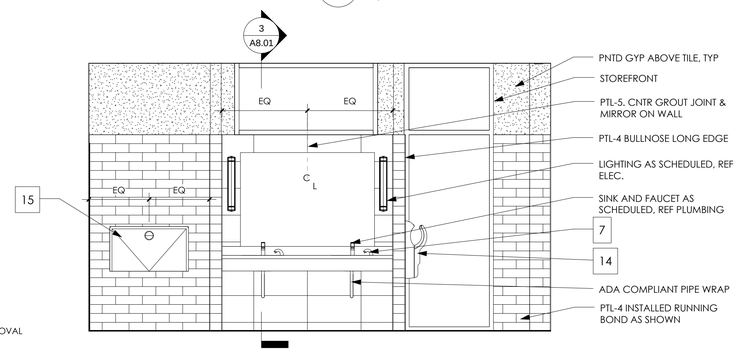

1 A8.02 INTERIOR ELEVATION
3/8" = 1'-0"

ENTEROS DESIGN

314 EXCHANGE ALLEY
PETERSBURG, VA 23804

804.861.1200 P
804.861.1253 F

All ideas, designs, arrangements and plans indicated or represented by this drawing are property of ENTEROS DESIGN, PC; created, evolved and developed for the sole use of this project. These ideas, design arrangements and/or plans shall not be used by or disclosed to any person, firm or corporation for any purpose without written permission from ENTEROS DESIGN, PC. Written dimensions on these drawings shall have precedence over scaled dimensions. Contractors shall verify and be responsible for all dimensions and conditions on the job. The Architect must be notified of any variations from the dimensions and conditions shown on these drawings.
© 2016 ENTEROS DESIGN, PC

WILLIAMSON ROAD LIBRARY

3837 Williamson Road, Roanoke, VA 24012

CONSTRUCTION DOCUMENTS

REVISIONS:

BATHROOM PLANS & ELEVATIONS

PROJ. NO.:156003 DRAWN BY:BB
DATE: 04.13.16

COMMONWEALTH OF VIRGINIA
GILLETT WILLIAMS EDMONDSON
Lic. No. 011615
4/13/16
ARCHITECT

A8.02

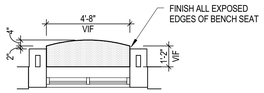

14 CURVED BENCH PLAN
SCALE: 1/4" = 1'-0"

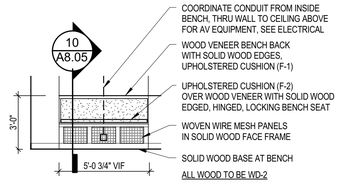

13 106 TEEN BOOTH BENCH
SCALE: 1/4" = 1'-0"

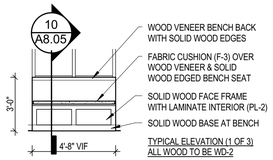

12 125 KIDS WINDOW SEAT SOUTH
SCALE: 1/4" = 1'-0"

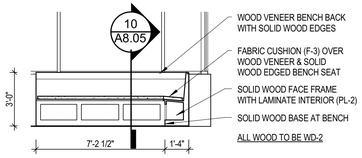

11 125 KIDS WINDOW SEAT WEST
SCALE: 1/4" = 1'-0"

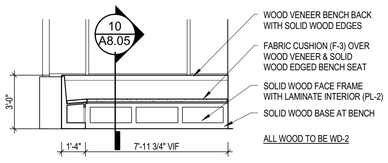

10 125 KIDS WINDOW SEAT NORTH
SCALE: 1/4" = 1'-0"

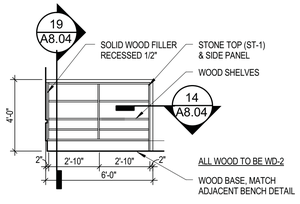

9 100 LOBBY DISPLAY WALL
SCALE: 1/4" = 1'-0"

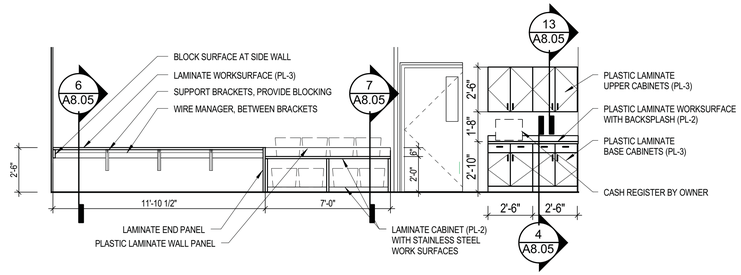

8 109 WORKROOM - SOUTH
SCALE: 1/4" = 1'-0"

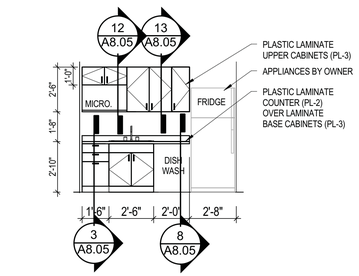

7 113 BREAK ROOM - EAST
SCALE: 1/4" = 1'-0"

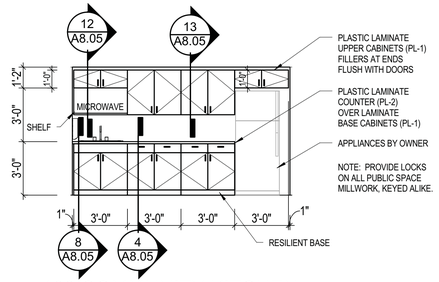

6 103 COMMUNITY KITCHEN
SCALE: 1/4" = 1'-0"

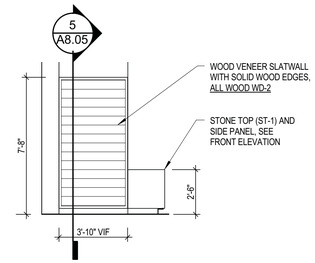

5 125 KIDS DISPLAY WALL
SCALE: 1/4" = 1'-0"

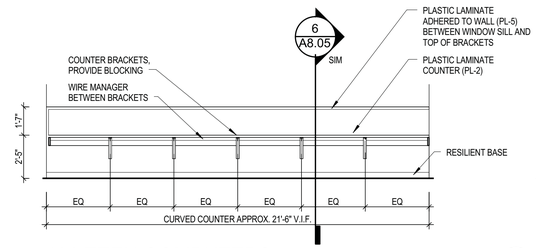

4 106 TEEN COMPUTERS
SCALE: 1/4" = 1'-0"

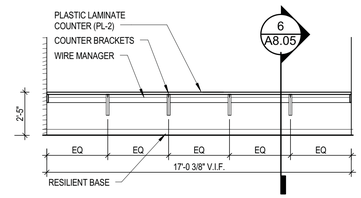

3 116 ADULT COMPUTERS
SCALE: 1/4" = 1'-0"

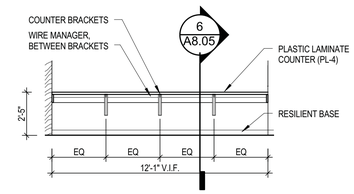

2 125 KIDS COMPUTERS
SCALE: 1/4" = 1'-0"

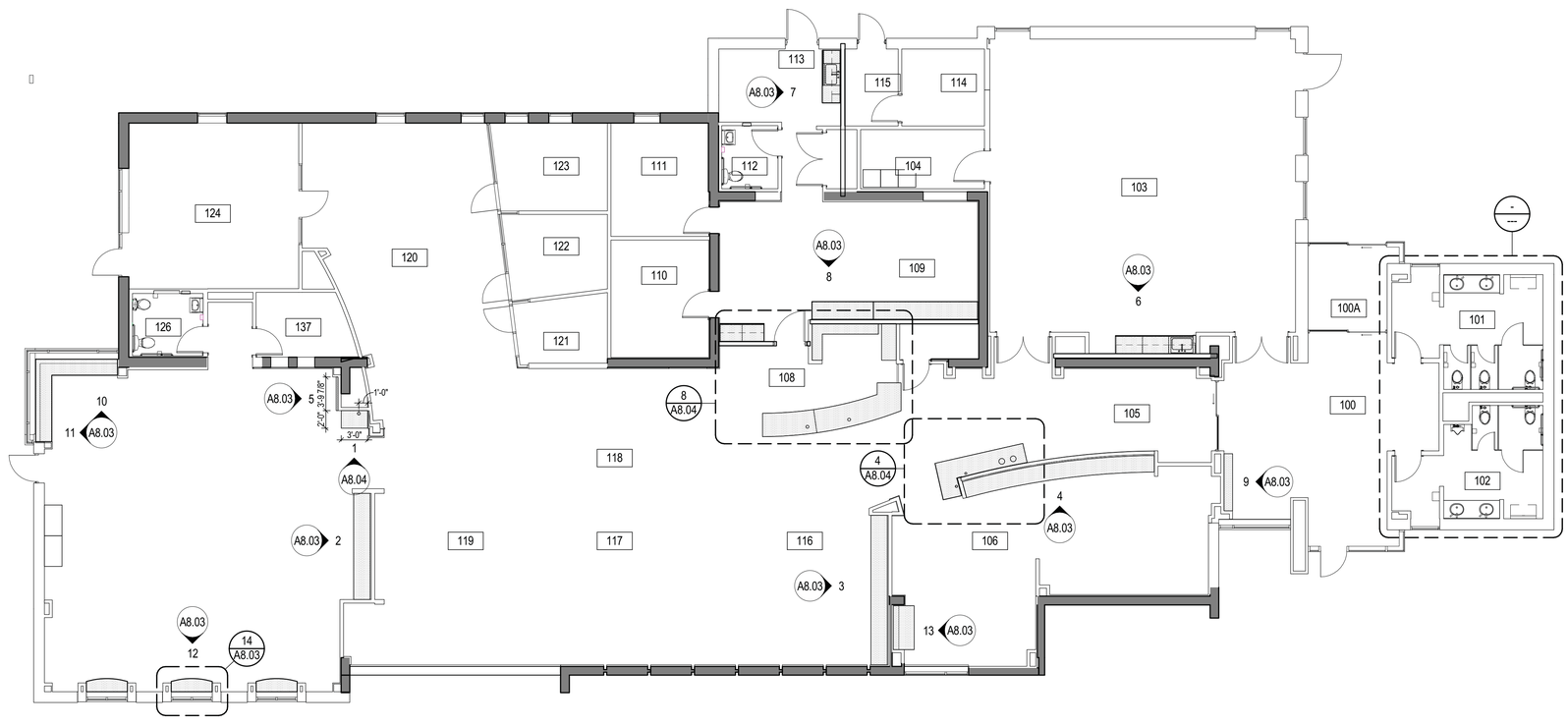

1 FIRST FLOOR INTERIORS PLAN
SCALE: 1/8" = 1'-0"

ENTEROS DESIGN

314 EXCHANGE ALLEY
PETERSBURG, VA 23804

804.861.1200 P
804.861.1253 F

All ideas, designs, arrangements and plans indicated or represented by this drawing are property of ENTEROS DESIGN, PC; created, evolved and developed for the sole use of this project. These ideas, design arrangements and/or plans shall not be used by or disclosed to any person, firm or corporation for any purpose without written permission from ENTEROS DESIGN, PC. Written dimensions on these drawings shall have precedence over scaled dimensions. Contractors shall verify and be responsible for all dimensions and conditions on the job. The Architect must be notified of any variations from the dimensions and conditions shown on these drawings.
c 2015 ENTEROS DESIGN, PC

Engberg Anderson ARCHITECTS
MILWAUKEE | MADISON | TUCSON | CHICAGO

WILLIAMSON ROAD BRANCH LIBRARY
Project Address

CONSTRUCTION DOCUMENTS

REVISIONS:

MILLWORK PLAN & ELEVATIONS

PROJ. NO.:152434 DRAWN BY:AR
04.13.2016

COMMONWEALTH OF VIRGINIA
GILER • HILBURN • ENGELBINGER
Lic. No. 011615
4/13/16
ARCHITECT

A8.03

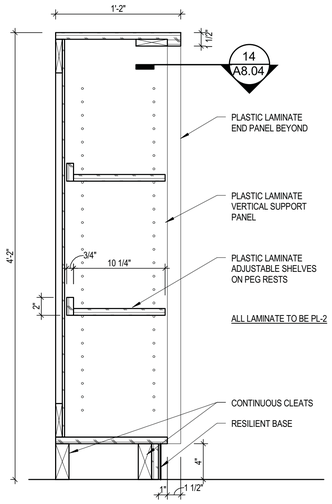

20 ADJUSTABLE SHELVES
SCALE: 1 1/2" = 1'-0"

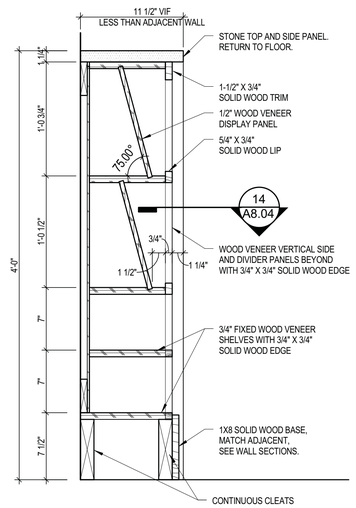

19 DISPLAY SHELVES
SCALE: 1 1/2" = 1'-0"

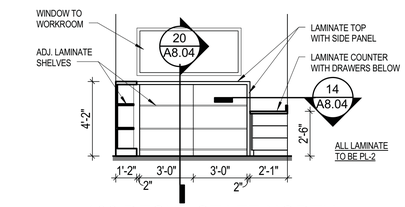

18 108 DESK - STAFF NORTH
SCALE: 1/4" = 1'-0"

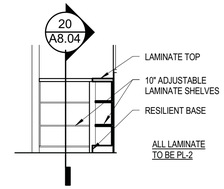

17 108 DESK - STAFF WEST
SCALE: 1/4" = 1'-0"

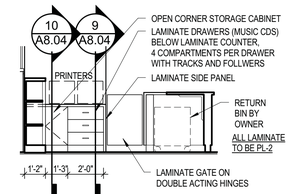

16 108 DESK -STAFF EAST
SCALE: 1/4" = 1'-0"

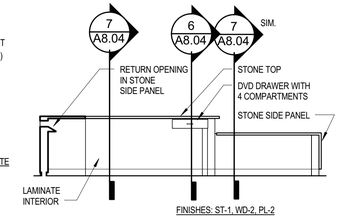

15 108 DESK - STAFF SOUTH
SCALE: 1/4" = 1'-0"

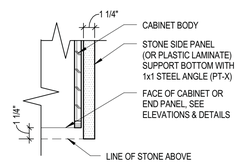

14 PLAN DETAIL
SCALE: 1 1/2" = 1'-0"

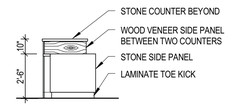

13 108 DESK - WEST
SCALE: 1/4" = 1'-0"

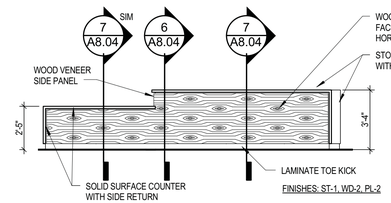

12 108 DESK - PUBLIC SOUTH
SCALE: 1/4" = 1'-0"

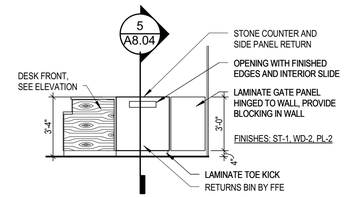

11 108 DESK - PUBLIC EAST
SCALE: 1/4" = 1'-0"

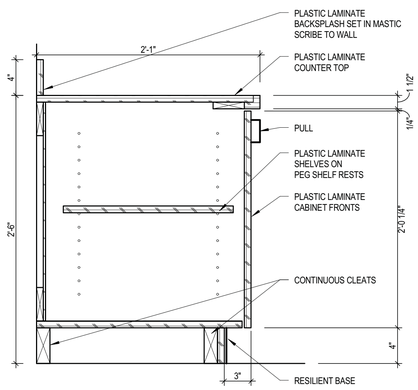

10 BASE CABINET TWO ADJ. SHELVES
SCALE: 1 1/2" = 1'-0"

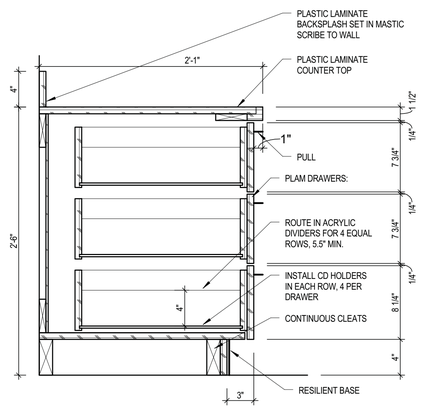

9 BASE CABINET 3 DRAWERS CDS
SCALE: 1 1/2" = 1'-0"

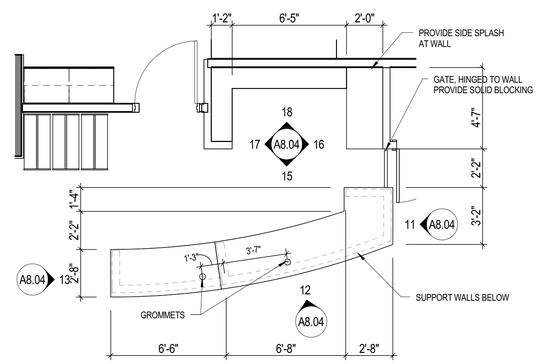

8 ENLARGED PLAN - CIRCULATION DESK
SCALE: 1/4" = 1'-0"

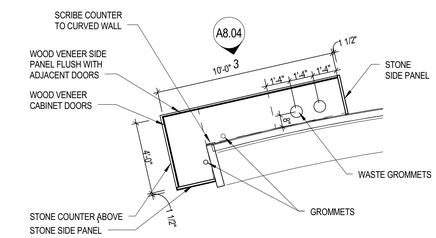

4 ENLARGED PLAN - SELF CHECK
SCALE: 1/4" = 1'-0"

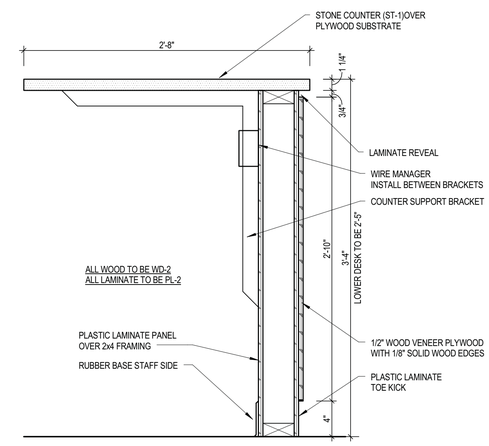

7 MAIN DESK
SCALE: 1 1/2" = 1'-0"

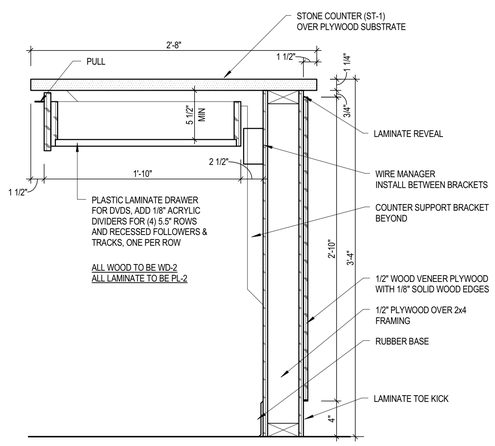

6 MAIN DESK WITH DRAWER
SCALE: 1 1/2" = 1'-0"

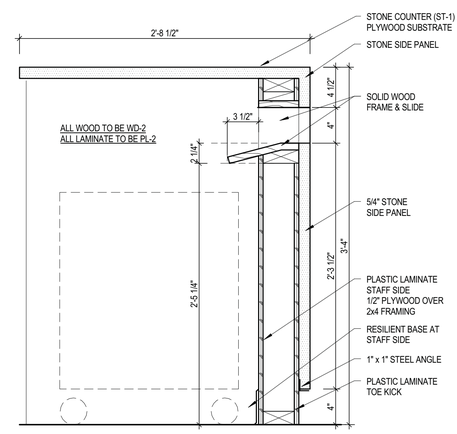

5 BOOK DROP
SCALE: 1 1/2" = 1'-0"

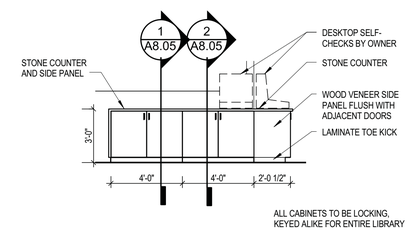

3 105 SELF CHECK NORTH
SCALE: 1/4" = 1'-0"

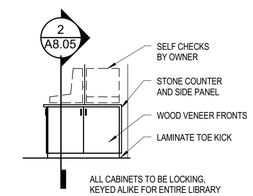

2 105 SELF CHECK WEST
SCALE: 1/4" = 1'-0"

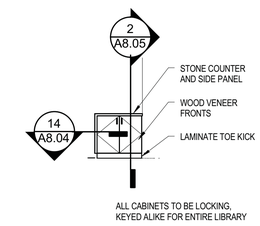

1 125 KIDS SELF CHECK
SCALE: 1/4" = 1'-0"

ENTEROS DESIGN
314 EXCHANGE ALLEY
PETERSBURG, VA 23804
804.861.1200 P
804.861.1253 F

All ideas, designs, arrangements and plans indicated or represented by this drawing are property of ENTEROS DESIGN, PC; created, evolved and developed for the sole use of this project. These ideas, design arrangements and/or plans shall not be used by or disclosed to any person, firm or corporation for any purpose without written permission from ENTEROS DESIGN, PC. Written dimensions on these drawings shall have precedence over scaled dimensions. Contractors shall verify and be responsible for all dimensions and conditions on the job. The Architect must be notified of any variations from the dimensions and conditions shown on these drawings. c 2015 ENTEROS DESIGN, PC

Engberg Anderson ARCHITECTS
MILWAUKEE | MADISON | TUCSON | CHICAGO

WILLIAMSON ROAD BRANCH LIBRARY

Project Address

CONSTRUCTION DOCUMENTS

REVISIONS:

DESK ELEVATIONS & DETAILS

PROJ. NO.:152434 DRAWN BY:AR
02.18.16

COMMONWEALTH OF VIRGINIA
GILES WILBURN ENZINGER
Lic. No. 011615
4/13/16
ARCHITECT

A8.04

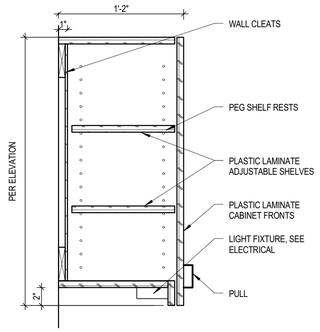

13 WALL CABINET TYPICAL
SCALE: 1 1/2" = 1'-0"

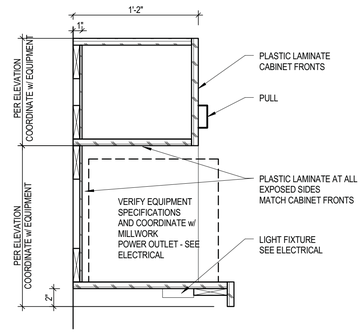

12 WALL CABINET FOR MICROWAVE
SCALE: 1 1/2" = 1'-0"

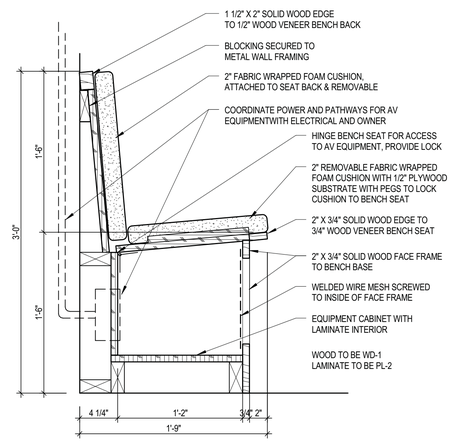

11 TEEN BENCH SEAT
SCALE: 1 1/2" = 1'-0"

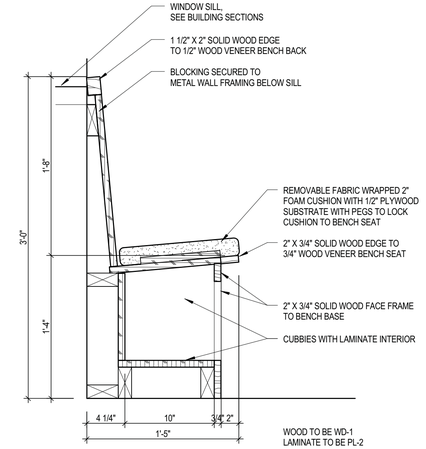

10 KIDS WINDOW SEAT
SCALE: 1 1/2" = 1'-0"

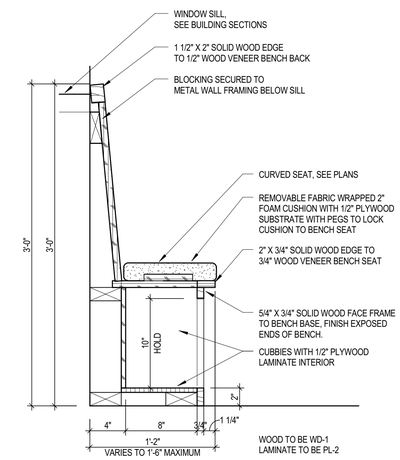

9 KIDS BAY WINDOW SEAT
SCALE: 1 1/2" = 1'-0"

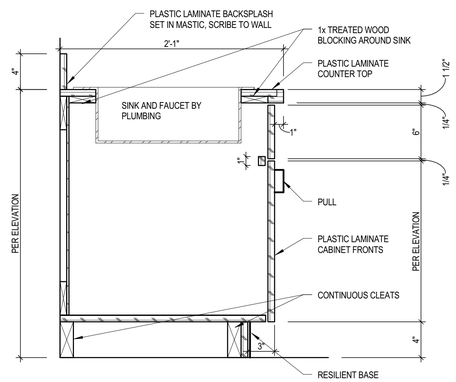

8 BASE CABINET WITH SINK
SCALE: 1 1/2" = 1'-0"

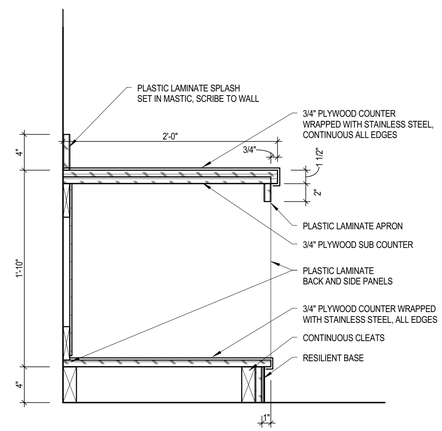

7 CUSTOM TABLE
SCALE: 1 1/2" = 1'-0"

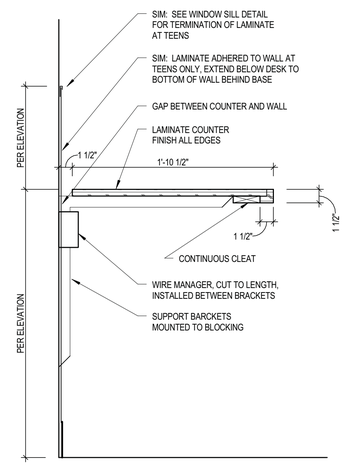

6 COUNTER WITH BRACKETS
SCALE: 1 1/2" = 1'-0"

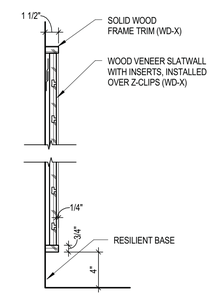

5 SLATWALL
SCALE: 1 1/2" = 1'-0"

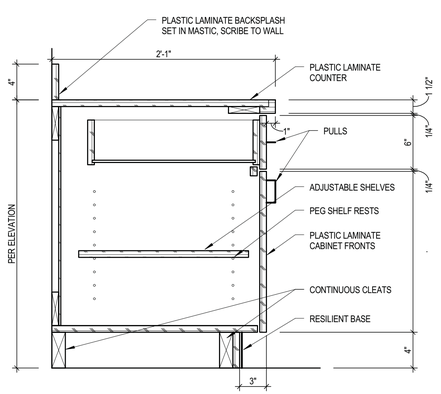

4 BASE CABINET TYPICAL
SCALE: 1 1/2" = 1'-0"

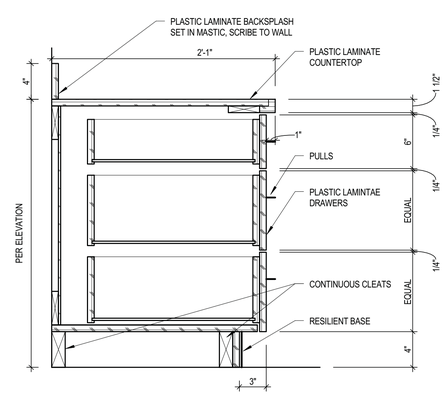

3 BASE CABINET WITH DRAWERS
SCALE: 1 1/2" = 1'-0"

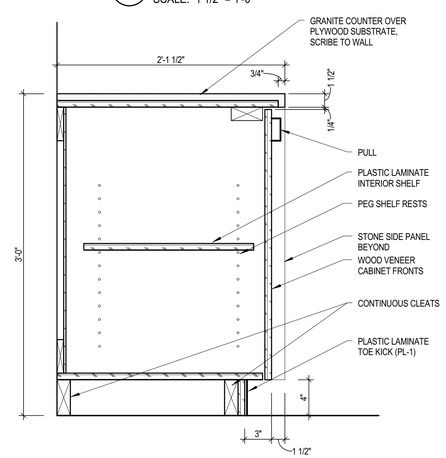

2 SELF CHECK BASE
SCALE: 1 1/2" = 1'-0"

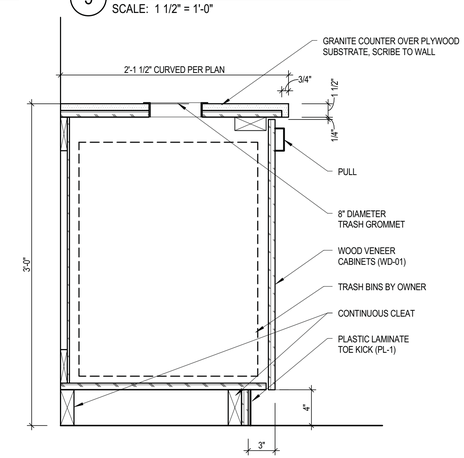

1 SELF CHECK BASE TRASH
SCALE: 1 1/2" = 1'-0"

ENTEROS DESIGN
314 EXCHANGE ALLEY
PETERSBURG, VA 23804
804.861.1200 P
804.861.1253 F

All ideas, designs, arrangements and plans indicated or represented by this drawing are property of ENTEROS DESIGN, PC; created, evolved and developed for the sale use of this project. These ideas, design arrangements and/or plans shall not be used by or disclosed to any person, firm or corporation for any purpose without written permission from ENTEROS DESIGN, PC. Written dimensions on these drawings shall have precedence over scaled dimensions. Contractors shall verify and be responsible for all dimensions and conditions on the job. The Architect must be notified of any variations from the dimensions and conditions shown on these drawings.
c 2015 ENTEROS DESIGN, PC

Engberg Anderson ARCHITECTS
MILWAUKEE | MADISON | TUCSON | CHICAGO

WILLIAMSON ROAD BRANCH LIBRARY

Project Address

CONSTRUCTION DOCUMENTS

REVISIONS:

MILLWORK DETAILS

PROJ. NO.:152434 DRAWN BY:EH
03/31/16

COMMONWEALTH OF VIRGINIA
GILBERT HUGUES ENGBERG
Lic. No 011615
4/13/16
ARCHITECT

A8.05

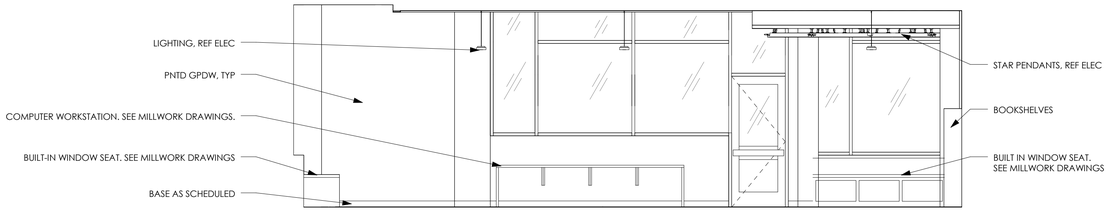

10 A8.06 INTERIOR ELEVATION
1/4" = 1'-0"

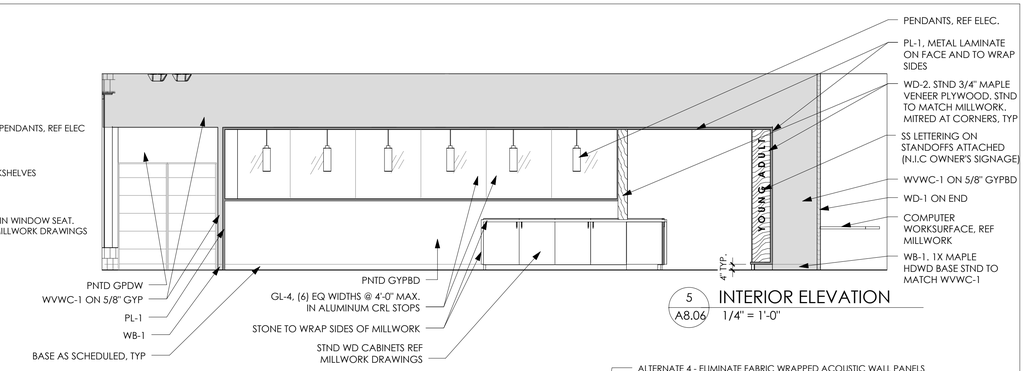

5 A8.06 INTERIOR ELEVATION
1/4" = 1'-0"

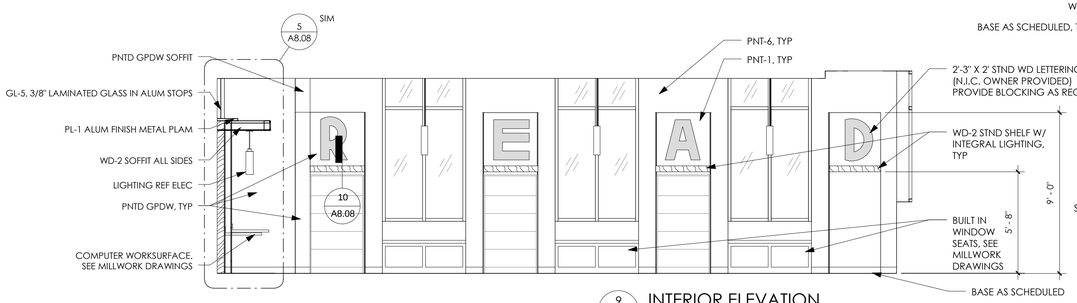

9 A8.06 INTERIOR ELEVATION
1/4" = 1'-0"

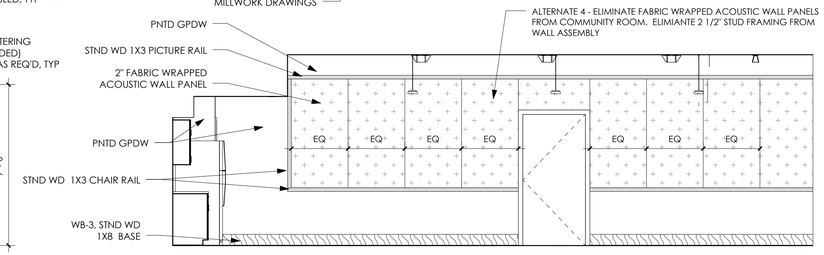

4 A8.06 INTERIOR ELEVATION
1/4" = 1'-0"

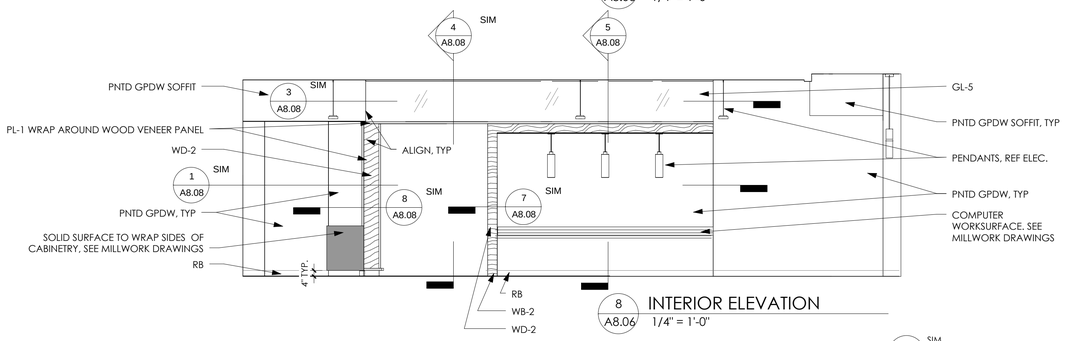

8 A8.06 INTERIOR ELEVATION
1/4" = 1'-0"

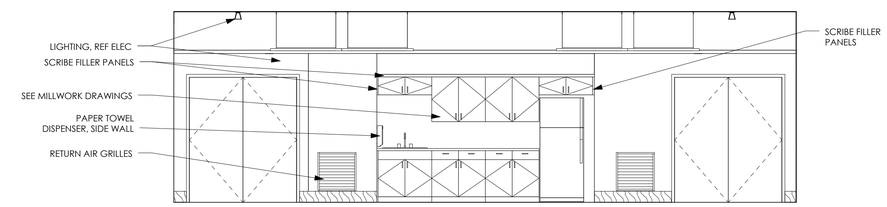

3 A8.06 INTERIOR ELEVATION
1/4" = 1'-0"

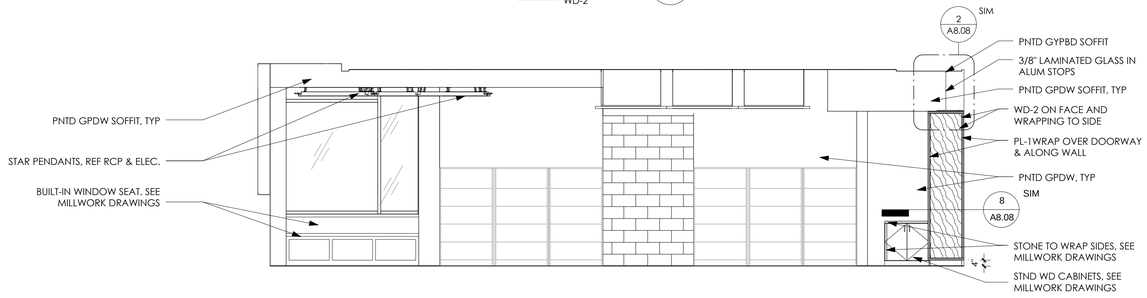

7 A8.06 INTERIOR ELEVATION
1/4" = 1'-0"

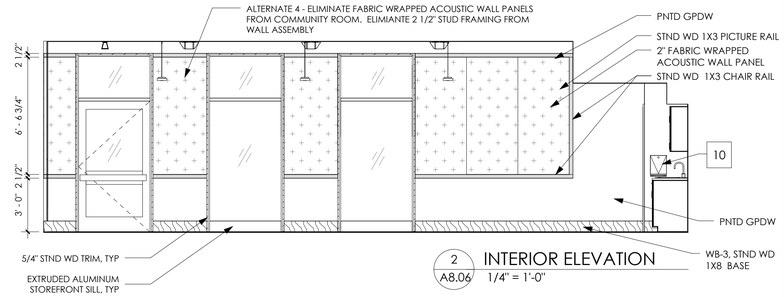

2 A8.06 INTERIOR ELEVATION
1/4" = 1'-0"

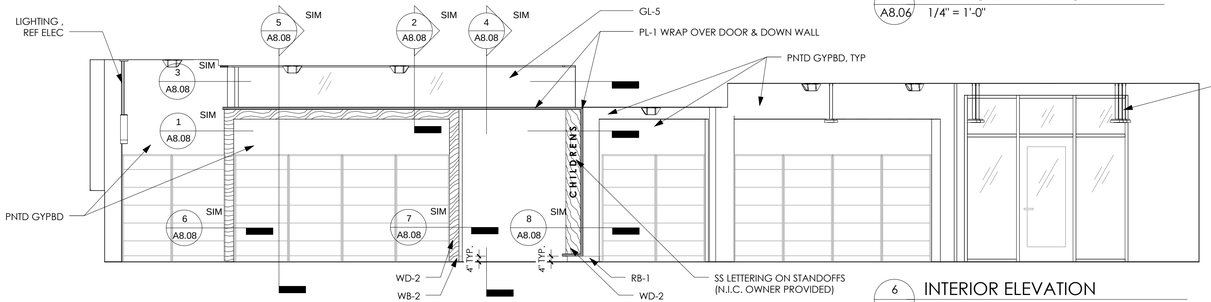

6 A8.06 INTERIOR ELEVATION
1/4" = 1'-0"

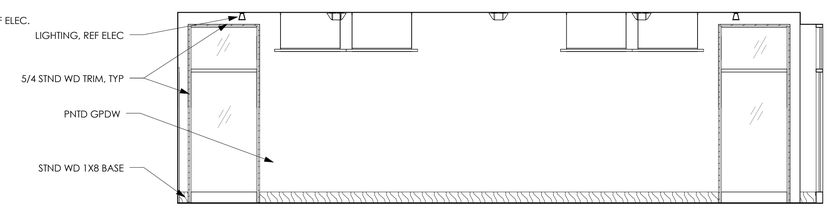

1 A8.06 INTERIOR ELEVATION
1/4" = 1'-0"

ENTEROS DESIGN

314 EXCHANGE ALLEY
PETERSBURG, VA 23804

804.861.1200 P
804.861.1253 F

All ideas, designs, arrangements and plans indicated or represented by this drawing are property of ENTEROS DESIGN, PC; created, evolved and developed for the sole use of this project. These ideas, design arrangements and/or plans shall not be used by or disclosed to any person, firm or corporation for any purpose without written permission from ENTEROS DESIGN, PC. Written dimensions on these drawings shall have precedence over scaled dimensions. Contractors shall verify and be responsible for all dimensions and conditions on the job. The Architect must be notified of any variations from the dimensions and conditions shown on these drawings.
© 2016 ENTEROS DESIGN, PC

WILLIAMSON ROAD LIBRARY

3837 Williamson Road, Roanoke, VA 24012

CONSTRUCTION DOCUMENTS

REVISIONS:

INTERIOR ELEVATIONS

PROJ. NO.:156003 DRAWN BY:BB
DATE: 04.13.16

COMMONWEALTH OF VIRGINIA
GILLER WILBURN ENZINGER
Lic. No. 011615
4/13/16
ARCHITECT

A8.06

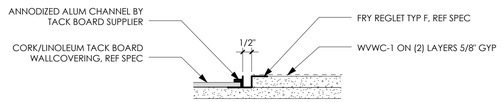

11 A8.07 SECTION DETAIL
3" = 1'-0"

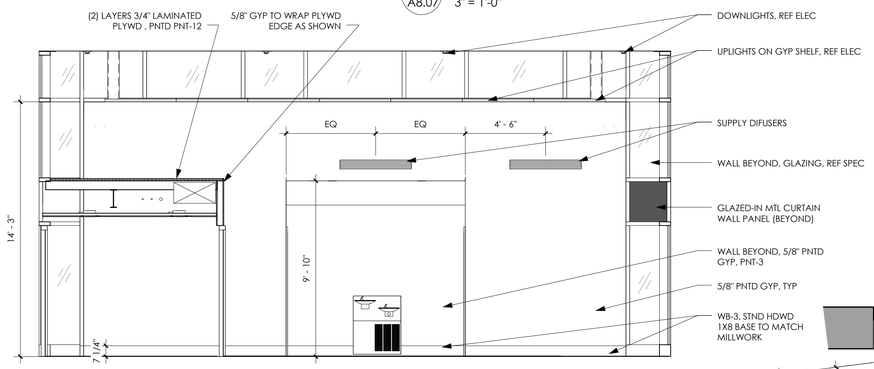

10 A8.07 INTERIOR ELEVATION
1/4" = 1'-0"

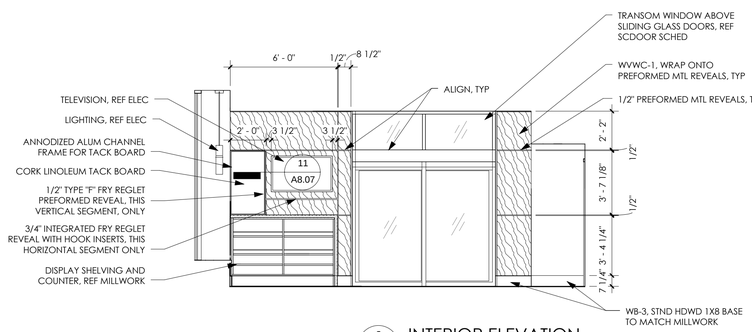

9 A8.07 INTERIOR ELEVATION
1/4" = 1'-0"

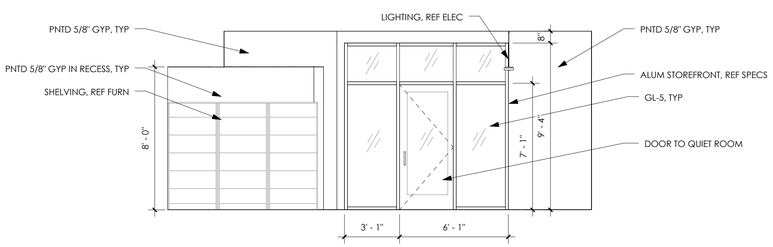

8 A8.07 INTERIOR ELEVATION
1/4" = 1'-0"

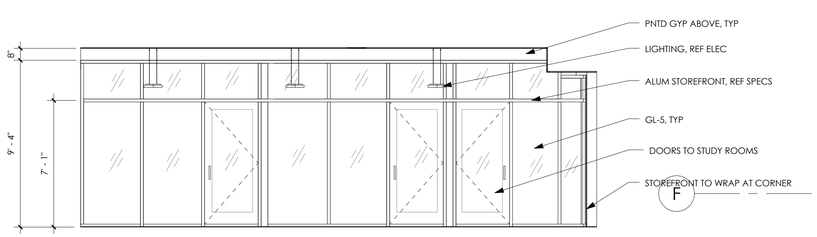

7 A8.07 INTERIOR ELEVATION
1/4" = 1'-0"

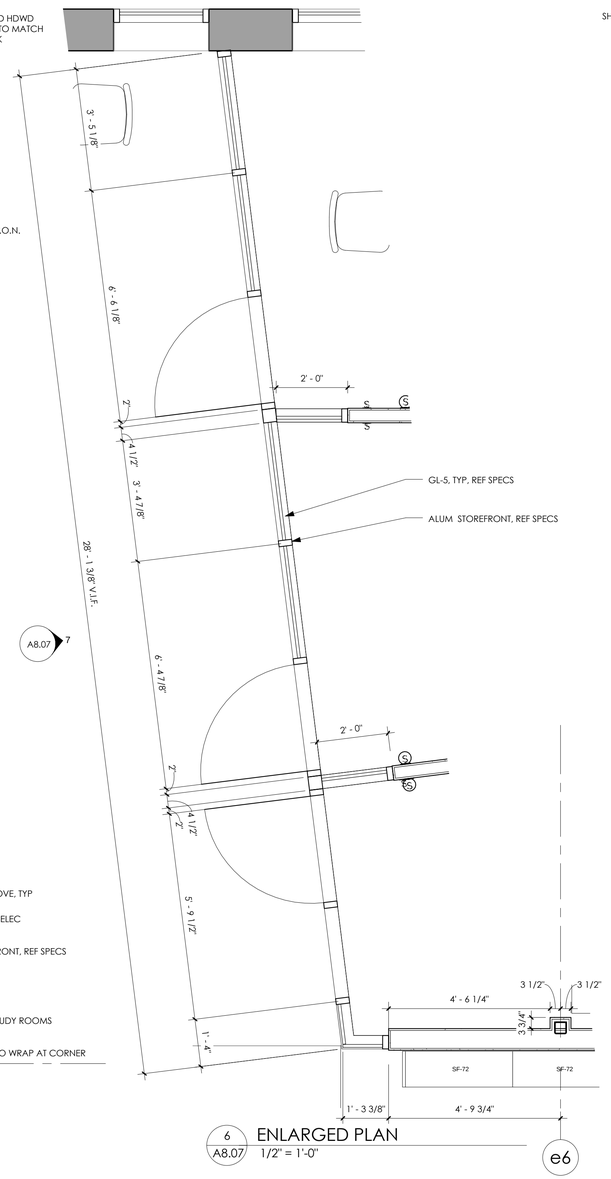

6 A8.07 ENLARGED PLAN
1/2" = 1'-0"

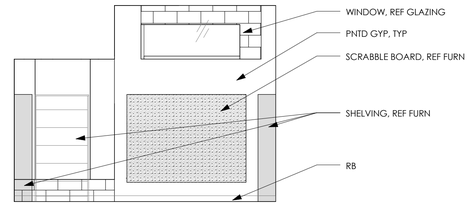

5 A8.07 INTERIOR ELEVATION
1/4" = 1'-0"

4 A8.07 INTERIOR ELEVATION
1/4" = 1'-0"

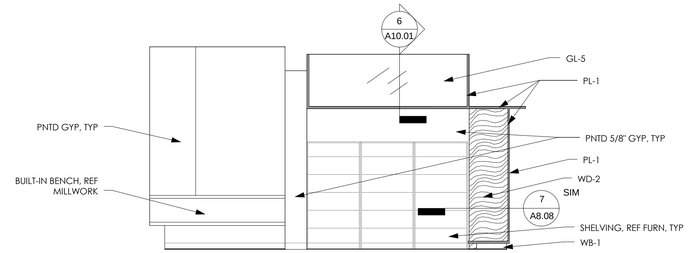

3 A8.07 INTERIOR ELEVATION
1/4" = 1'-0"

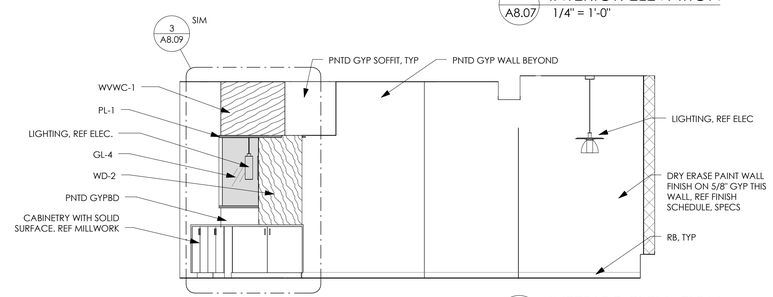

2 A8.07 INTERIOR ELEVATION
1/4" = 1'-0"

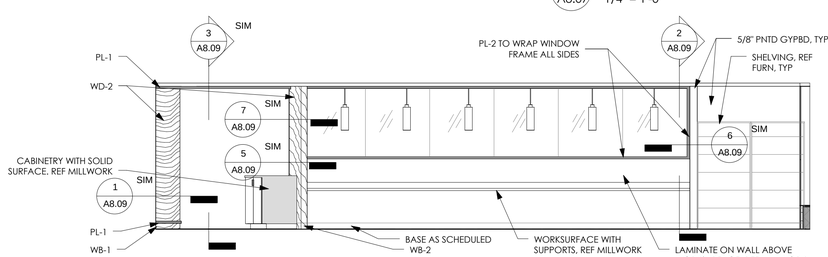

1 A8.07 INTERIOR ELEVATION
1/4" = 1'-0"

ENTEROS DESIGN

314 EXCHANGE ALLEY
PETERSBURG, VA 23804

804.861.1200 P
804.861.1253 F

All ideas, designs, arrangements and plans indicated or represented by this drawing are property of ENTEROS DESIGN, PC; created, evolved and developed for the sole use of this project. These ideas, design arrangements and/or plans shall not be used by or disclosed to any person, firm or corporation for any purpose without written permission from ENTEROS DESIGN, PC. Written dimensions on these drawings shall have precedence over scaled dimensions. Contractors shall verify and be responsible for all dimensions and conditions on the job. The Architect must be notified of any variations from the dimensions and conditions shown on these drawings.
© 2016 ENTEROS DESIGN, PC

WILLIAMSON ROAD LIBRARY

3837 Williamson Road, Roanoke, VA 24012

CONSTRUCTION DOCUMENTS

REVISIONS:

INTERIOR ELEVATIONS AND ENLARGED PLANS

PROJ. NO.:156003 DRAWN BY:BB
DATE: 04.13.16

COMMONWEALTH OF VIRGINIA
GILBERT WILBURN SWINGER
Lic. No. 011615
4/13/16
ARCHITECT

A8.07

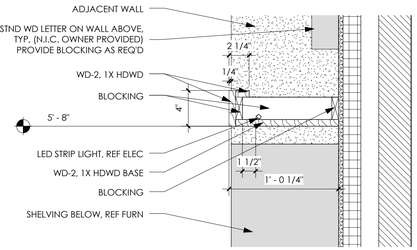

10 / A8.08 SECTION DETAIL
1 1/2" = 1'-0"

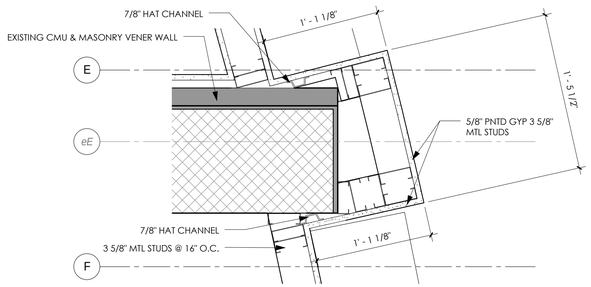

9 / A8.08 PLAN DETAIL
1 1/2" = 1'-0"

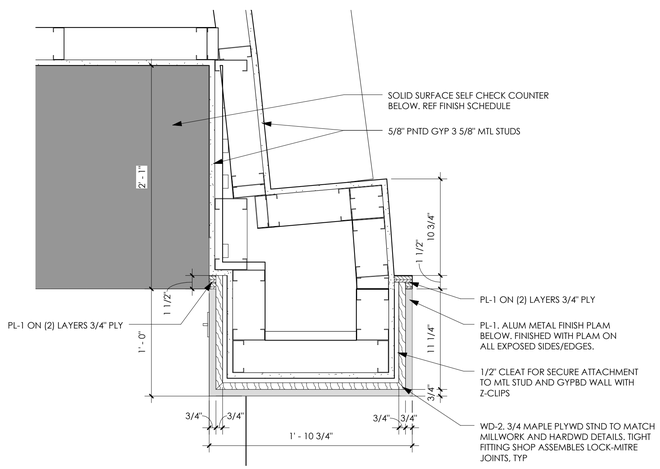

8 / A8.08 PLAN DETAIL
1 1/2" = 1'-0"

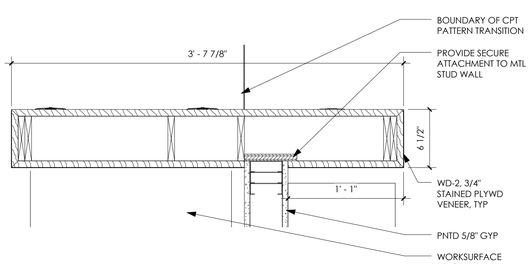

SEE 6/A8.07 FOR TYP NOTES.
FIELD INSTALL IF REQ'D TO MAKE ATTACHMENT TO MTL STUD WALL

7 / A8.08 PLAN DETAIL
1 1/2" = 1'-0"

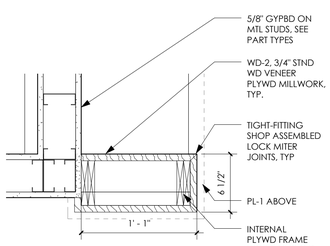

6 / A8.08 PLAN DETAIL
1 1/2" = 1'-0"

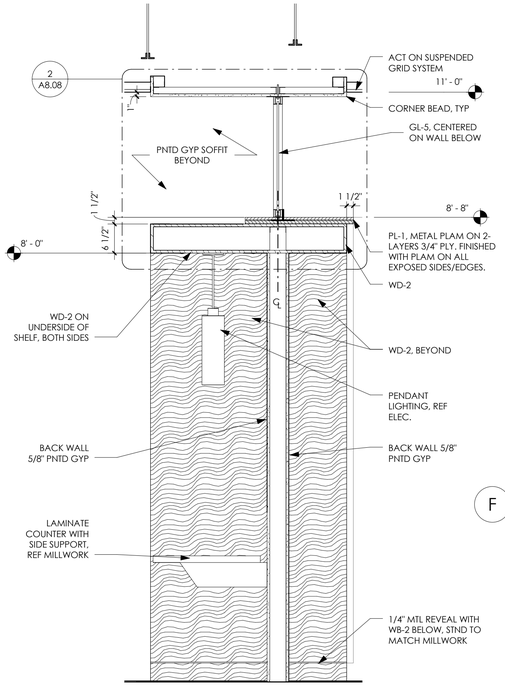

5 / A8.08 SECTION DETAIL
3/4" = 1'-0"

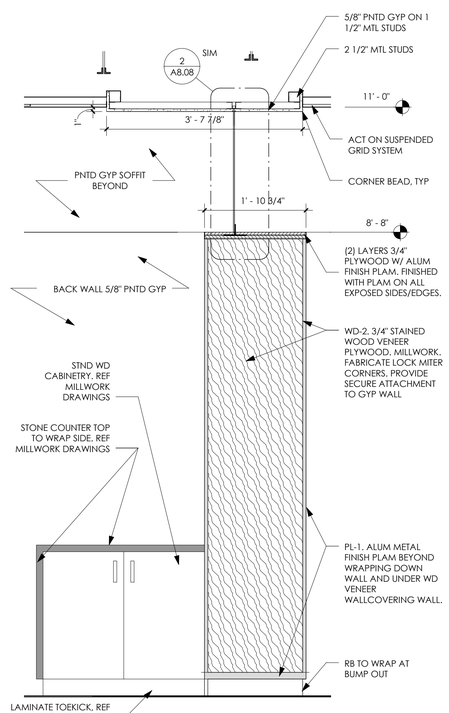

4 / A8.08 SECTION DETAIL
3/4" = 1'-0"

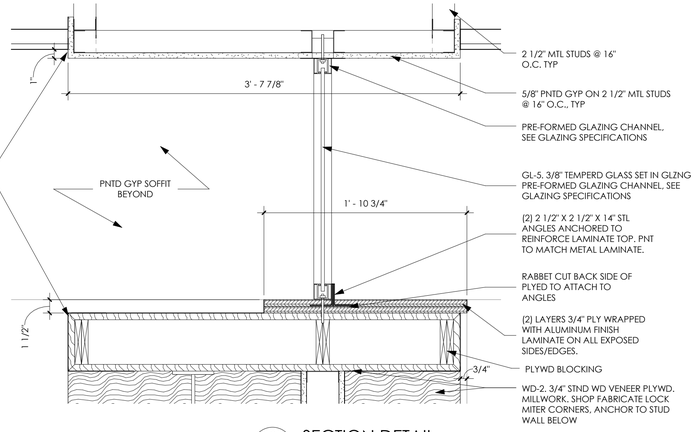

2 / A8.08 SECTION DETAIL
1 1/2" = 1'-0"

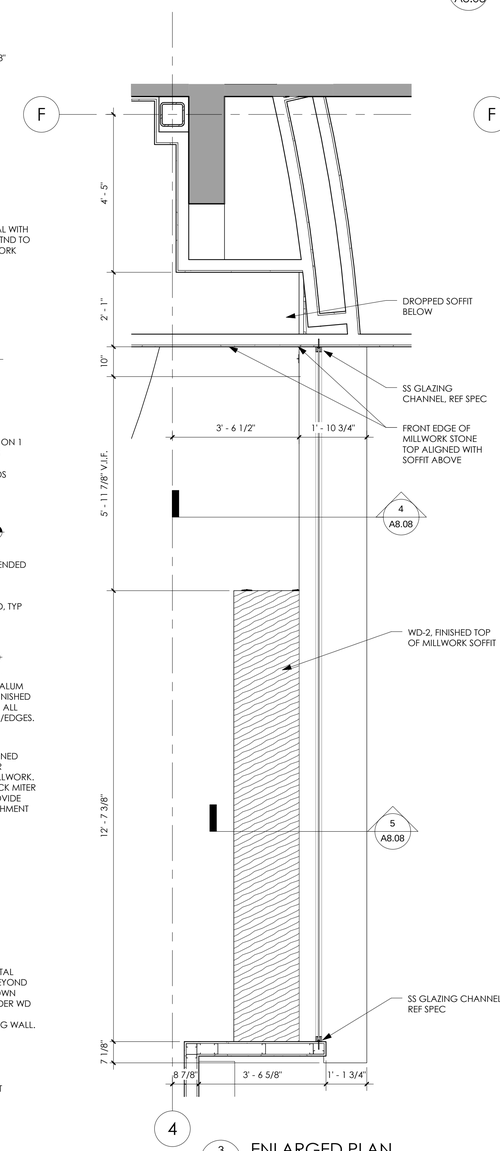

3 / A8.08 ENLARGED PLAN
1/2" = 1'-0"

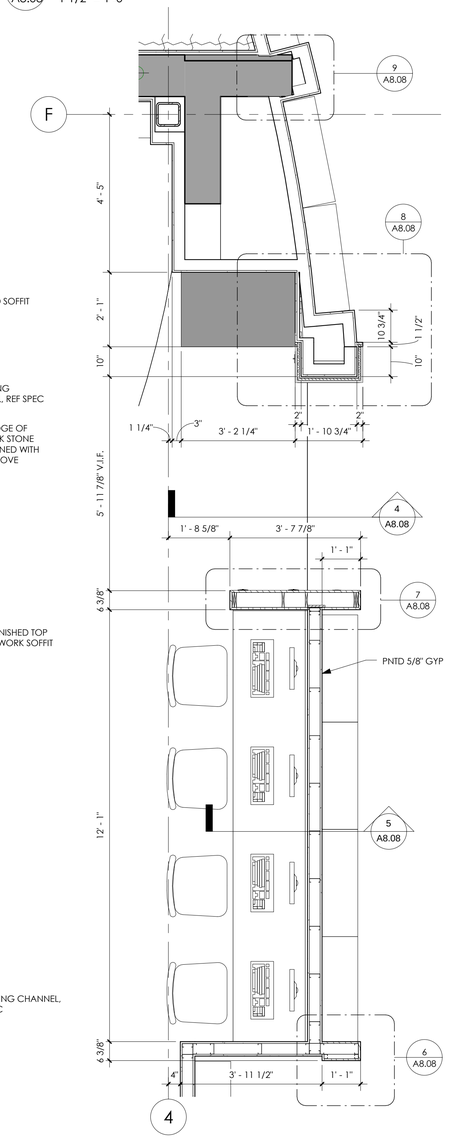

1 / A8.08 ENLARGED PLAN
1/2" = 1'-0"

ENTEROS DESIGN

314 EXCHANGE ALLEY
PETERSBURG, VA 23804

804.861.1200 P
804.861.1253 F

All ideas, designs, arrangements and plans indicated or represented by this drawing are property of ENTEROS DESIGN, PC; created, evolved and developed for the sole use of this project. These ideas, design arrangements and/or plans shall not be used by or disclosed to any person, firm or corporation for any purpose without written permission from ENTEROS DESIGN, PC. Written dimensions on these drawings shall have precedence over scaled dimensions. Contractors shall verify and be responsible for all dimensions and conditions on the job. The Architect must be notified of any variations from the dimensions and conditions shown on these drawings.
© 2016 ENTEROS DESIGN, PC

WILLIAMSON ROAD LIBRARY

3837 Williamson Road, Roanoke, VA 24012

CONSTRUCTION DOCUMENTS

REVISIONS:

ENLARGED PLANS & DETAILS

PROJ. NO.:156003 DRAWN BY:BB
DATE: 04.13.16

COMMONWEALTH OF VIRGINIA
GILLETT MILBURN EDMONDSON
Lic. No. 011615
4/13/16
ARCHITECT

A8.08

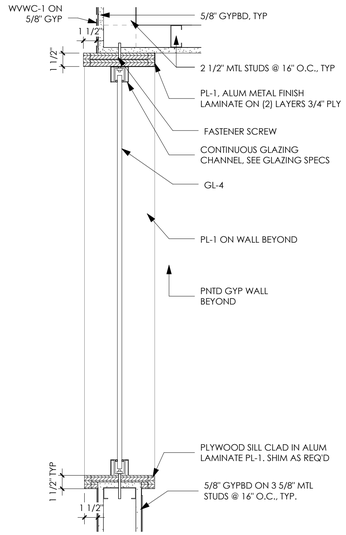

8 A8.09 SECTION DETAIL
1 1/2" = 1'-0"

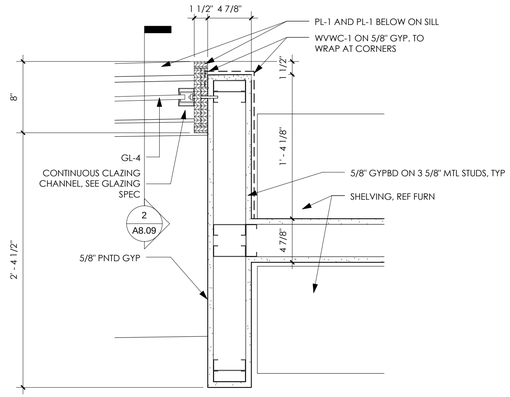

6 A8.09 PLAN DETAIL
1 1/2" = 1'-0"

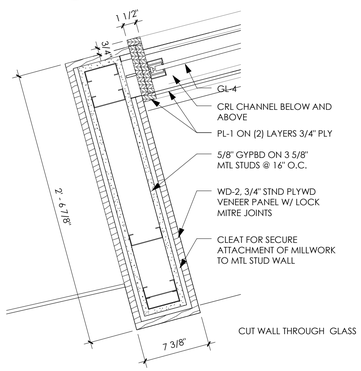

7 A8.09 PLAN DETAIL
1 1/2" = 1'-0"

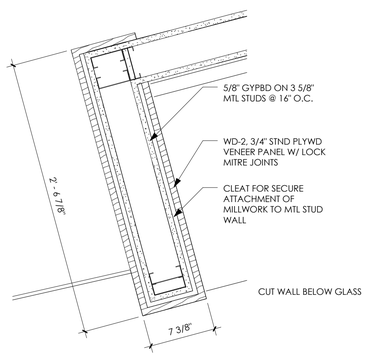

5 A8.09 PLAN DETAIL
1 1/2" = 1'-0"

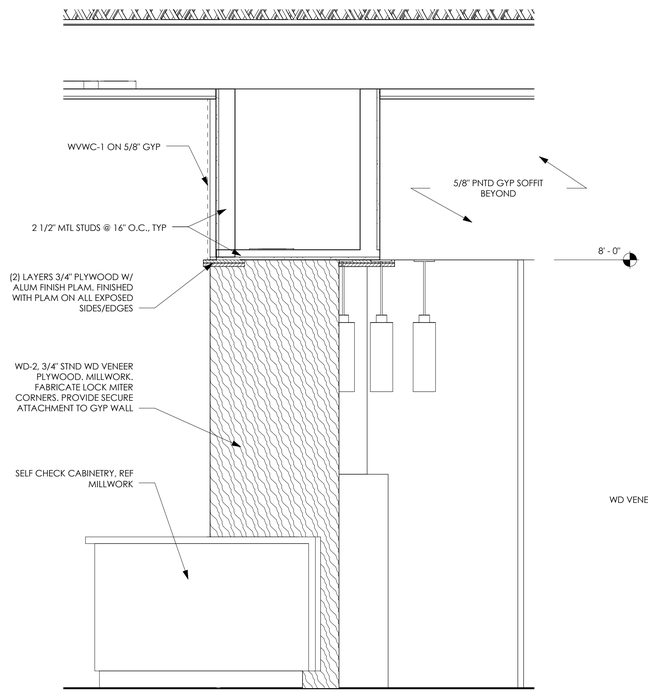

3 A8.09 SECTION DETAIL
3/4" = 1'-0"

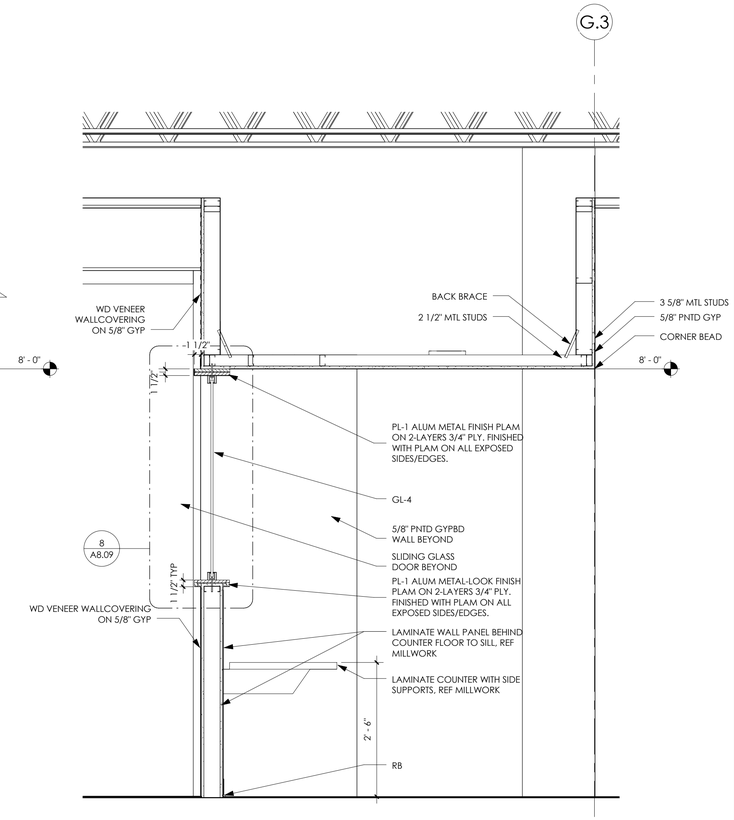

2 A8.09 SECTION DETAIL
3/4" = 1'-0"

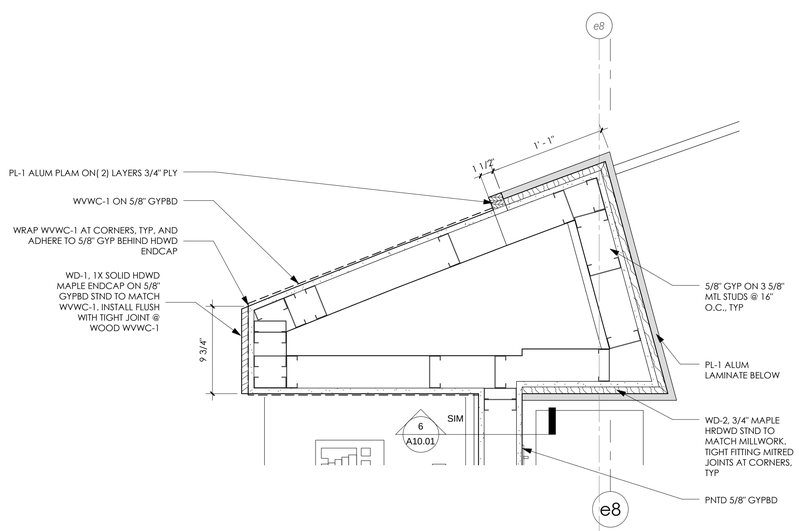

4 A8.09 PLAN DETAIL
1 1/2" = 1'-0"

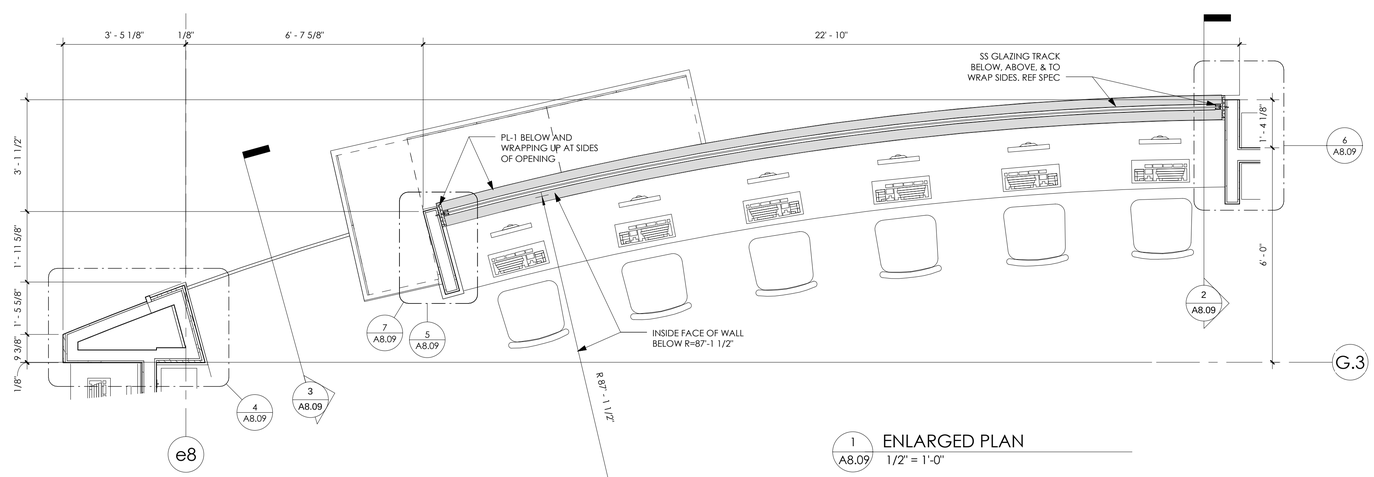

1 A8.09 ENLARGED PLAN
1/2" = 1'-0"

ENTEROS DESIGN

314 EXCHANGE ALLEY
PETERSBURG, VA 23804

804.861.1200 P
804.861.1253 F

All ideas, designs, arrangements and plans indicated or represented by this drawing are property of ENTEROS DESIGN, PC; created, evolved and developed for the sole use of this project. These ideas, design arrangements and/or plans shall not be used by or disclosed to any person, firm or corporation for any purpose without written permission from ENTEROS DESIGN, PC. Written dimensions on these drawings shall have precedence over scaled dimensions. Contractors shall verify and be responsible for all dimensions and conditions on the job. The Architect must be notified of any variations from the dimensions and conditions shown on these drawings.
© 2016 ENTEROS DESIGN, PC

WILLIAMSON ROAD LIBRARY

3837 Williamson Road, Roanoke, VA 24012

CONSTRUCTION DOCUMENTS

REVISIONS:

ENLARGED PLANS & DETAILS

PROJ. NO.:156003 DRAWN BY:BB
DATE: 04.13.16

COMMONWEALTH OF VIRGINIA
GILBERT WILBURN ENTZMINGER
Lic. No. 011615
4/13/16
ARCHITECT

A8.09

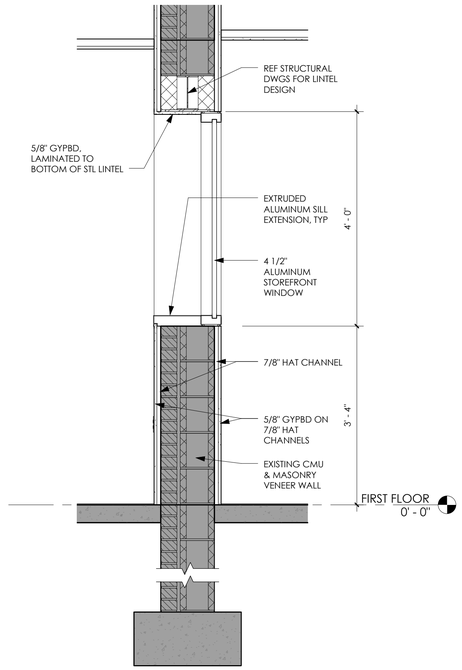

4 A8.10 SECTION DETAIL
3/4" = 1'-0"

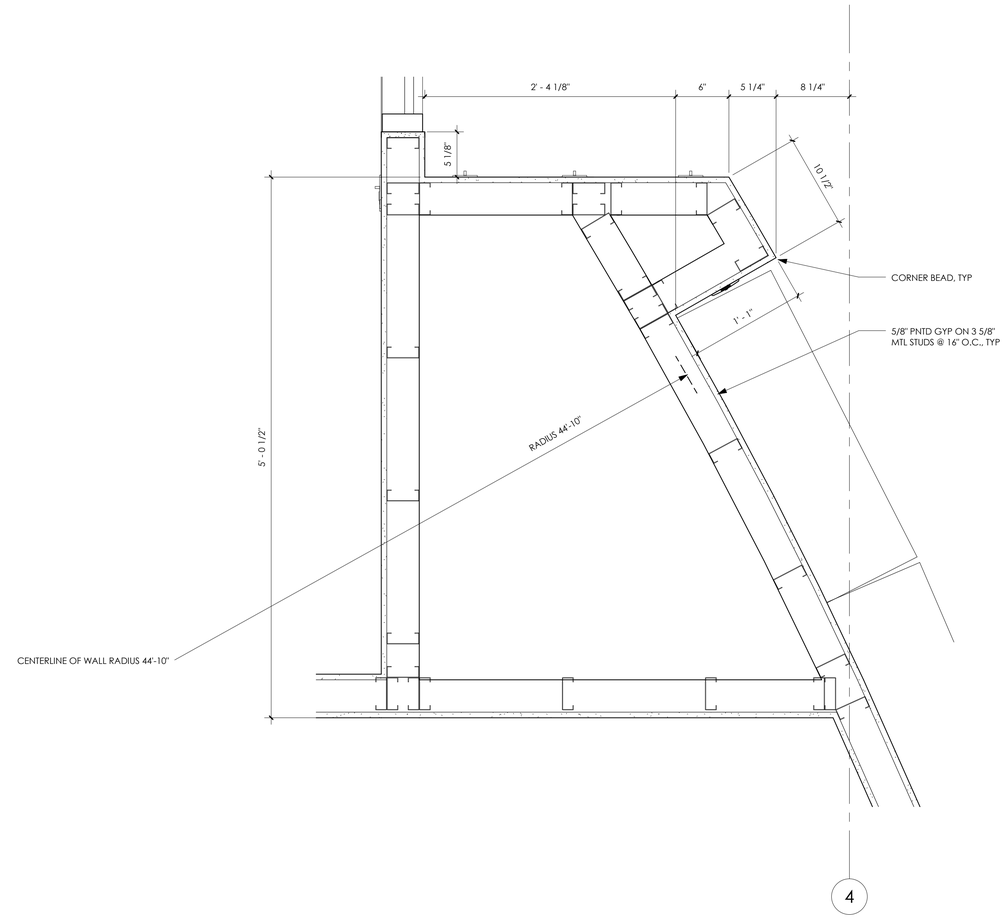

2 A8.10 PLAN DETAIL
1 1/2" = 1'-0"

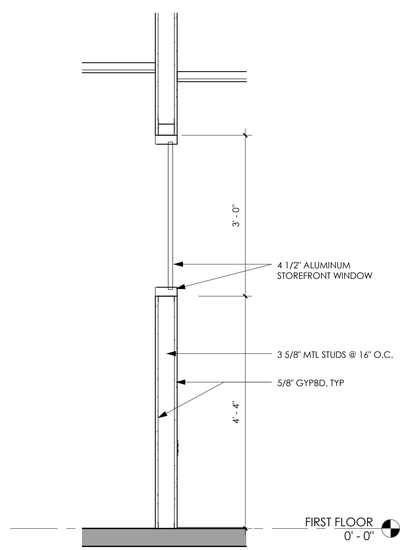

1 A8.10 SECTION DETAIL
3/4" = 1'-0"

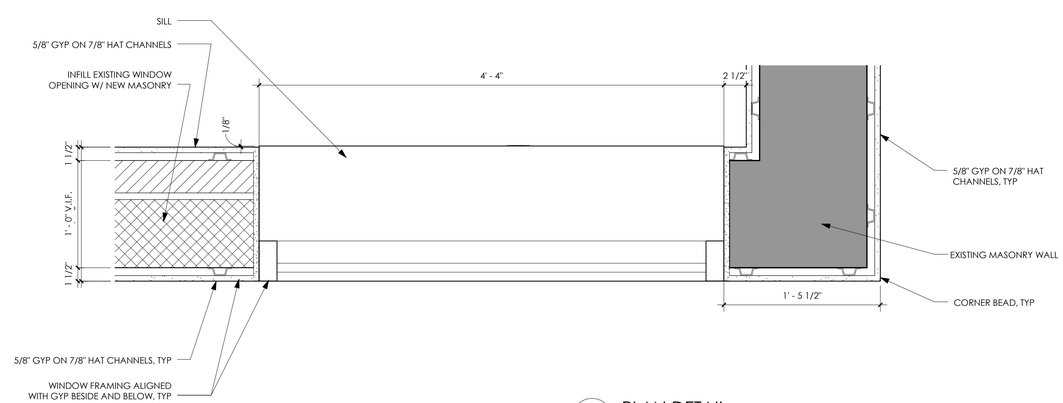

3 A8.10 PLAN DETAIL
1 1/2" = 1'-0"

ENTEROS DESIGN

314 EXCHANGE ALLEY
PETERSBURG, VA 23804

804.861.1200 P
804.861.1253 F

All ideas, designs, arrangements and plans indicated or represented by this drawing are property of ENTEROS DESIGN, PC; created, evolved and developed for the sole use of this project. These ideas, design arrangements and/or plans shall not be used by or disclosed to any person, firm or corporation for any purpose without written permission from ENTEROS DESIGN, PC. Written dimensions on these drawings shall have precedence over scaled dimensions. Contractors shall verify and be responsible for all dimensions and conditions on the job. The Architect must be notified of any variations from the dimensions and conditions shown on these drawings.
© 2016 ENTEROS DESIGN, PC

WILLIAMSON ROAD LIBRARY

3837 Williamson Road, Roanoke, VA 24012

CONSTRUCTION DOCUMENTS

REVISIONS:

ENLARGED PLANS & DETAILS

PROJ. NO.:156003 DRAWN BY:BB
DATE: 04.13.16

COMMONWEALTH OF VIRGINIA
GILLETT WILLIAMS ENTZINGER
Lic. No. 011615
4/13/16
ARCHITECT

A8.10

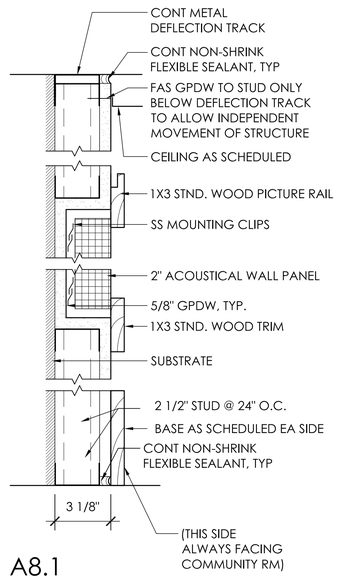

A8.1

A8.2 - NO ACOUSTIC PANEL

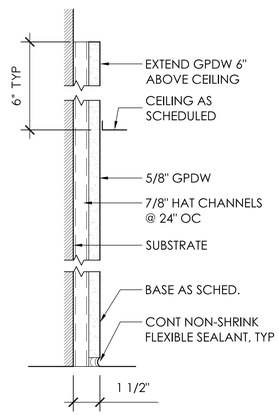

A6.1

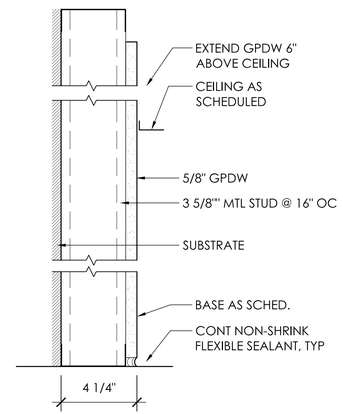

A4.1

A4.2 - 6" MTL STUD BEARING WALL

A4.3 - WATER RESISTANT GYPBD

A4.4 - 2 1/2" MTL STUD

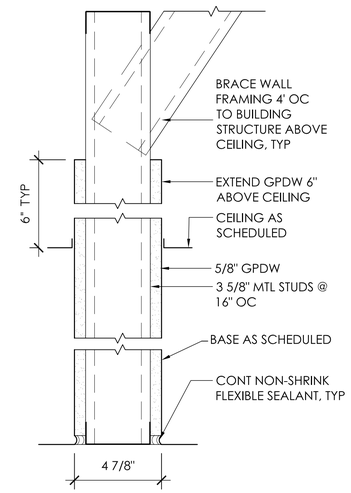

A2.1

A2.2 - 6" MTL STUD

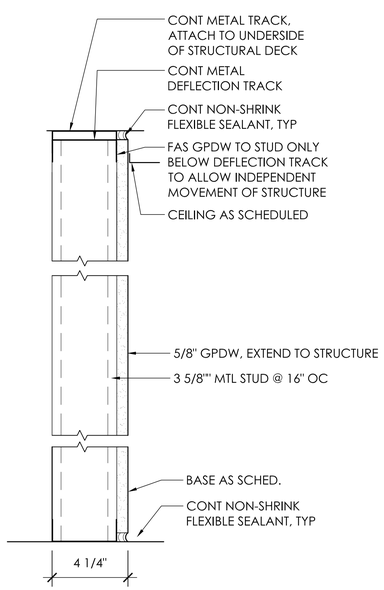

A9.1

A9.2 - 2 1/2" MTL STUD

A9.3 - 2 LAYERS OF 5/8" GYPBD

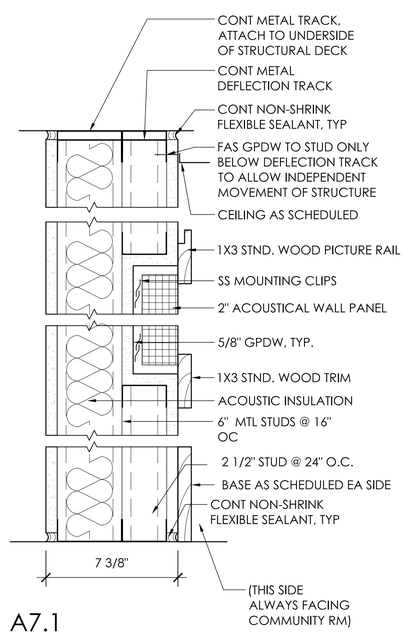

A7.1

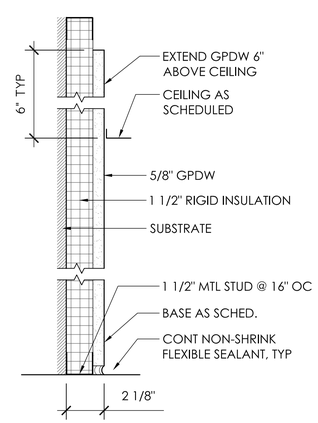

A5.1

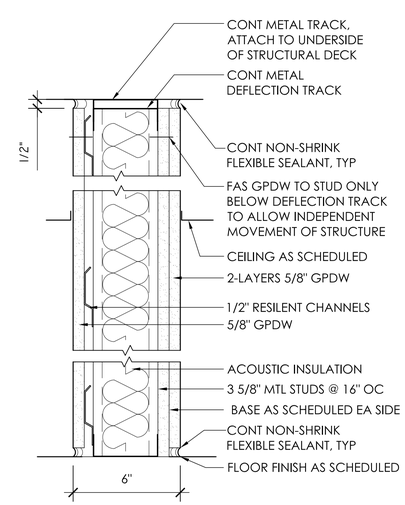

A3.1

A3.2 - GYP ON ONE SIDE ONLY

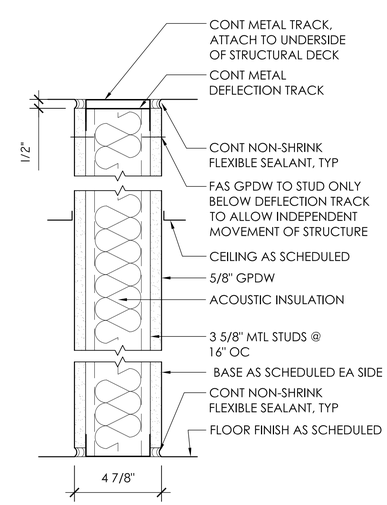

A1.1

A1.2 - 6" MTL STUD

A1.3 - WATER RESISTANT GYPBD ONE SIDE

A1.4 - 2 LAYERS OF 5/8" GYPBD ON SIDE TAGGED

ENTEROS DESIGN

314 EXCHANGE ALLEY
PETERSBURG, VA 23804

804.861.1200 P
804.861.1253 F

All ideas, designs, arrangements and plans indicated or represented by this drawing are property of ENTEROS DESIGN, PC; created, evolved and developed for the sole use of this project. These ideas, design arrangements and/or plans shall not be used by or disclosed to any person, firm or corporation for any purpose without written permission from ENTEROS DESIGN, PC. Written dimensions on these drawings shall have precedence over scaled dimensions. Contractors shall verify and be responsible for all dimensions and conditions on the job. The Architect must be notified of any variations from the dimensions and conditions shown on these drawings.
© 2016 ENTEROS DESIGN, PC

WILLIAMSON ROAD
LIBRARY RENOVATION
3837 WILLIAMSON ROAD
ROANOKE, VA 24012

CONSTRUCTION
DOCUTMENTS

PARTITION
TYPES

PROJ. NO.: 156003 DRAWN BY: TRF
04.13.16

COMMONWEALTH OF VIRGINIA
GILBERT HOLBURN DOMINGER
Lic. No. 011615
4/13/16
ARCHITECT

A9.01

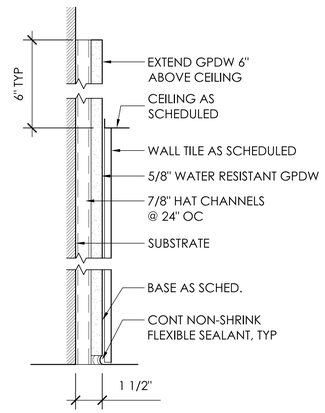

B6.1

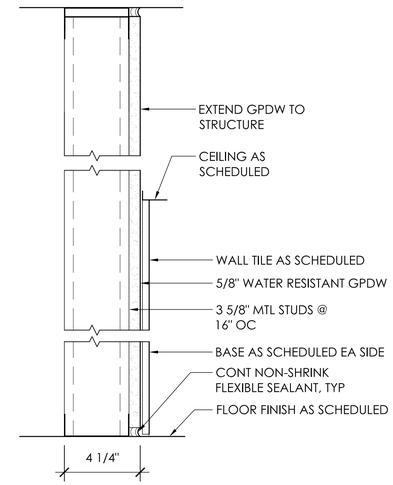

B4.1

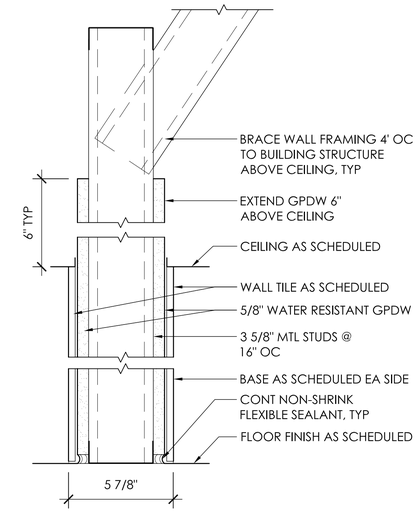

B2.1

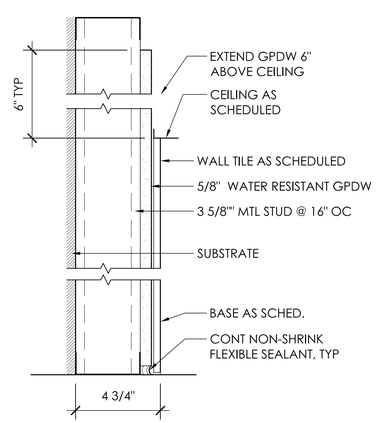

B5.1

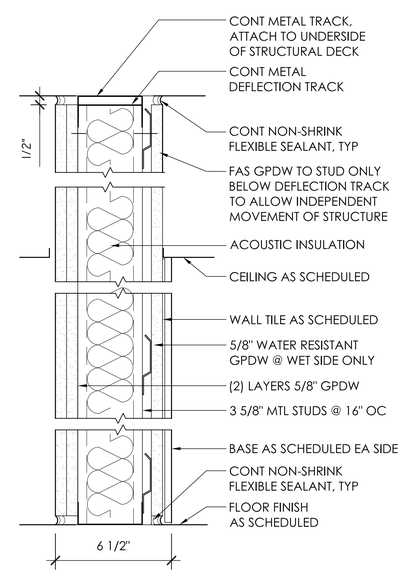

B3.1

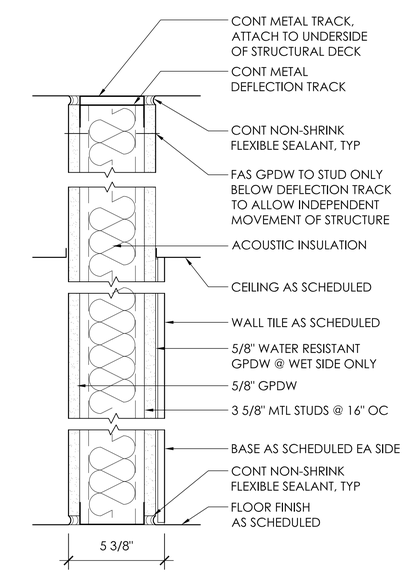

B1.1

ENTEROS DESIGN

314 EXCHANGE ALLEY
PETERSBURG, VA 23804

804.861.1200 P
804.861.1253 F

All ideas, designs, arrangements and plans indicated or represented by this drawing are property of ENTEROS DESIGN, PC; created, evolved and developed for the sole use of this project. These ideas, design arrangements and/or plans shall not be used by or disclosed to any person, firm or corporation for any purpose without written permission from ENTEROS DESIGN, PC. Written dimensions on these drawings shall have precedence over scaled dimensions. Contractors shall verify and be responsible for all dimensions and conditions on the job. The Architect must be notified of any variations from the dimensions and conditions shown on these drawings.
© 2016 ENTEROS DESIGN, PC

WILLIAMSON ROAD LIBRARY RENOVATION
3837 WILLIAMSON ROAD
ROANOKE, VA 24012

CONSTRUCTION DOCUTMENTS

PARTITION TYPES

PROJ. NO.: 156003 DRAWN BY: TRF
04.13.16

COMMONWEALTH OF VIRGINIA
GILBERT HOLMES DONZINGER
Lic. No. 011615
4/13/16
ARCHITECT

A9.02

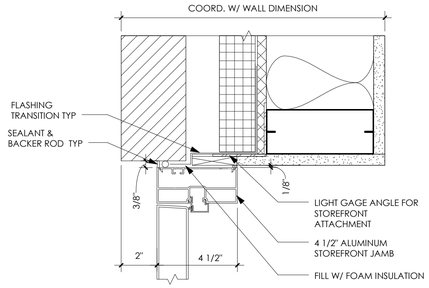

13 A9.03 JAMB 2
3" = 1'-0"

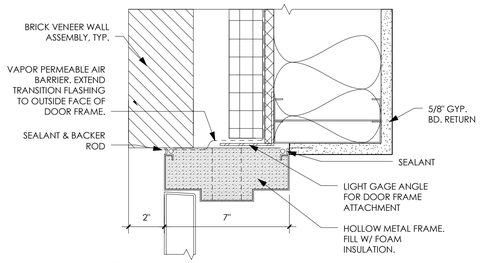

9 A9.03 JAMB 1
3" = 1'-0"

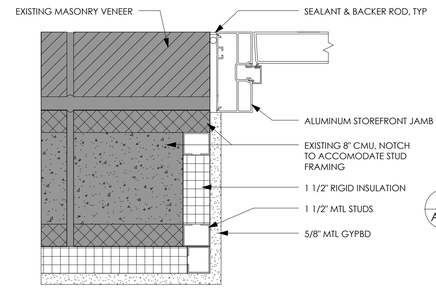

7 A9.03 JAMB 3
3" = 1'-0"

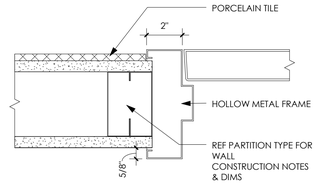

4 A9.03 HEAD/JAMB 3
3" = 1'-0"

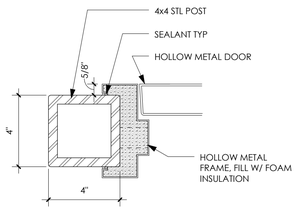

16 A9.03 JAMB 4
3" = 1'-0"

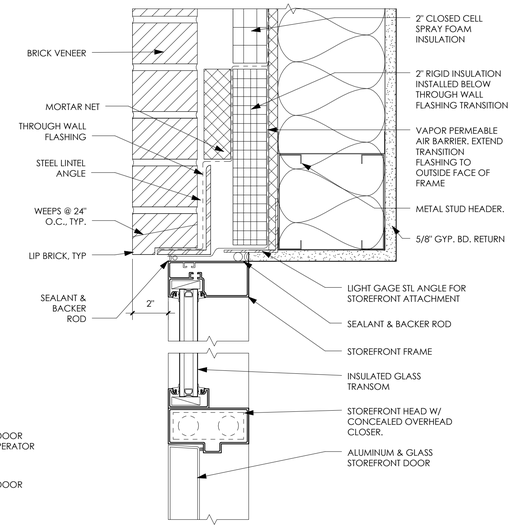

12 A9.03 HEAD 2
3" = 1'-0"

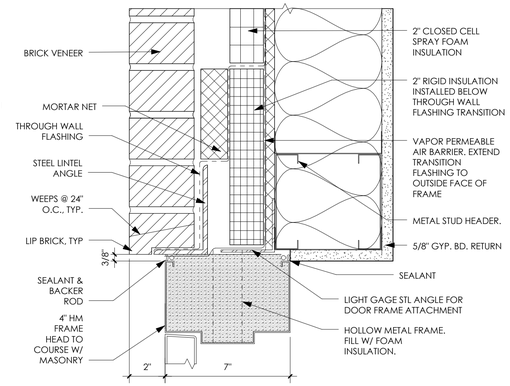

8 A9.03 HEAD 1
3" = 1'-0"

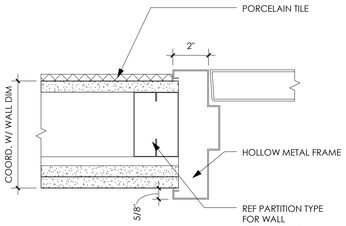

3 A9.03 HEAD/JAMB 2
3" = 1'-0"

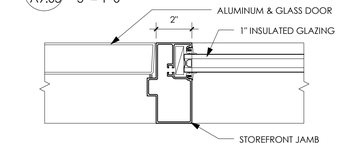

6 A9.03 HEAD/JAMB 5
3" = 1'-0"

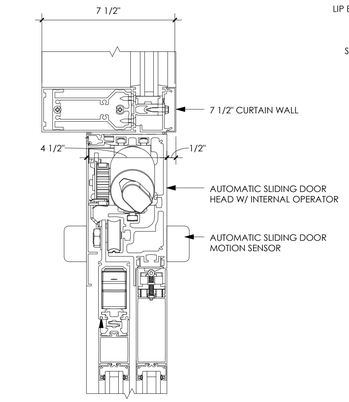

15 A9.03 HEAD 5
3" = 1'-0"

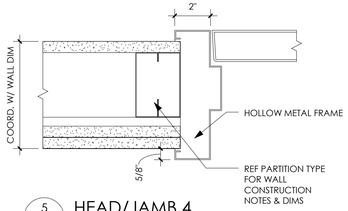

5 A9.03 HEAD/JAMB 4
3" = 1'-0"

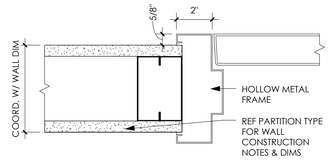

2 A9.03 HEAD/JAMB 1
3" = 1'-0"

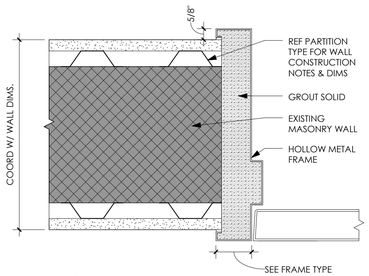

11 A9.03 HEAD/JAMB 13
3" = 1'-0"

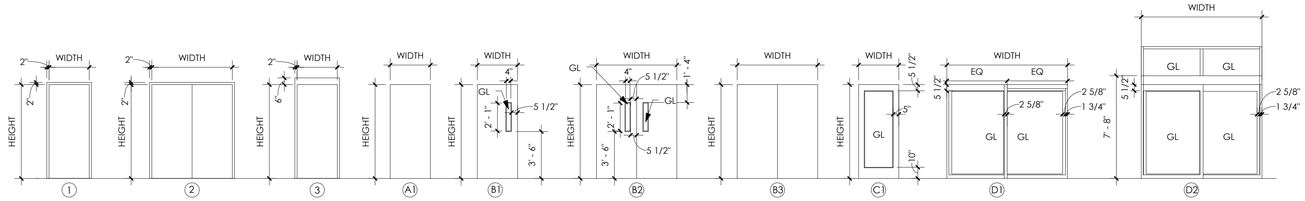

1 A9.03 FRAME AND DOOR TYPES
3/16" = 1'-0"

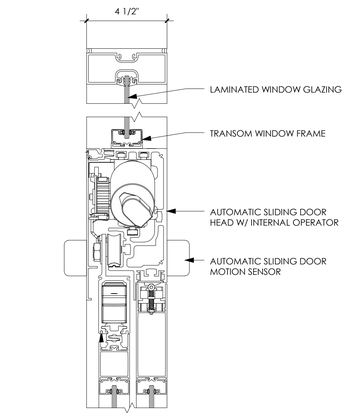

14 A9.03 HEAD 6
3" = 1'-0"

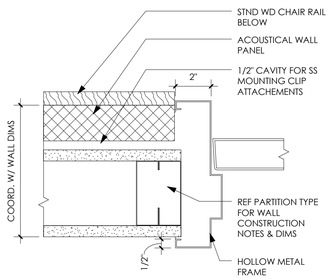

10 A9.03 HEAD/JAMB 17
3" = 1'-0"

DOOR SCHEDULE

NUMBER	ROOM NAME	WIDTH	DOOR HEIGHT	DOOR THICKNESS	DOOR TYPE	FRAME MATERIAL	FRAME FINISH	FRAME TYPE	FRAME MATERIAL	FRAME FINISH	DETAILS HEAD	DETAILS JAMB	HARDWARE	FIRE RATING	REMARKS
100A	VESTIBULE	8' - 6 7/8"	7' - 4"	0' - 2"	D1	AL/G	PNTD	1	AL	PNTD	15/A9.03 - 2/A6.07	2&5/A7.01	HW-01	-	AUTOMATIC SLIDING DOOR
100B	VESTIBULE	9' - 0"	7' - 4"	0' - 2"	D1	AL/G	PNTD	1	AL	PNTD	2/A6.07	9&10/A7.01	HW-01	-	AUTOMATIC SLIDING DOOR
100C	ARRIVAL	3' - 0"	7' - 4"	0' - 2"	C1	AL/G	PNTD	1	AL	PNTD	3/A6.07	1/A7.01	HW-21	-	ALUMINUM CURTAINWALL
100D	ARRIVAL	8' - 0"	7' - 4"	0' - 2"	D2	AL/G	PNTD	1	AL	PNTD	14/A9.03 - 6/A7.02	4&5/A7.01	HW-01	-	AUTOMATIC SLIDING DOOR
101	ARRIVAL	3' - 0"	7' - 0"	0' - 1 3/4"	A1	WD	STND	1	HM	PNTD	3/A9.03	3/A9.03	HW-03	-	
102	ARRIVAL	3' - 0"	7' - 0"	0' - 1 3/4"	A1	WD	STND	1	HM	PNTD	3/A9.03	3/A9.03	HW-03	-	
103A	COMMUNITY ROOM	3' - 0" (2)	7' - 0"	0' - 1 3/4"	B2	WD	STND	2	HM	PNTD	5/A9.03	5/A9.03	HW-04	-	
103B	COMMUNITY ROOM	3' - 0" (2)	7' - 0"	0' - 1 3/4"	B2	WD	STND	2	HM	PNTD	5/A9.03	5/A9.03	HW-05	-	
103C	COMMUNITY ROOM	4' - 0"	7' - 4"	0' - 2"	C1	AL/G	PNTD	1	AL	PNTD	6/A9.03 - 4/A6.05	3/A7.02	HW-02	-	ALUMINUM STOREFRONT
104	COMMUNITY ROOM	3' - 6"	7' - 4"	0' - 1 3/4"	A1	WD	STND	1	HM	PNTD	10/A9.03	10/A9.03	HW-06	-	
107	JANITOR	3' - 0"	7' - 0"	0' - 1 3/4"	A1	WD	STND	1	HM	PNTD	2/A9.03	2/A9.03	HW-07	-	
109	WORK ROOM	3' - 6"	7' - 0"	0' - 1 3/4"	B1	WD	STND	1	HM	PNTD	2/A9.03	2/A9.03	HW-08	-	
110	OFFICE	3' - 0"	7' - 0"	0' - 1 3/4"	B1	WD	STND	1	HM	PNTD	11/A9.03	11/A9.03	HW-09	-	
111	STORAGE	3' - 0"	7' - 0"	0' - 1 3/4"	A1	WD	STND	1	HM	PNTD	11/A9.03	11/A9.03	HW-10	-	
112	STAFF RESTROOM	3' - 0"	7' - 0"	0' - 1 3/4"	A1	WD	STND	1	HM	PNTD	2/A9.03	4/A9.03	HW-11	-	
113	BREAK ROOM	3' - 6"	7' - 0"	0' - 1 3/4"	B1	HM	PNTD	1	HM	PNTD	8/A9.03	9/A9.03	HW-18	-	
113B	DATA	3' - 0" (2)	7' - 0"	0' - 1 3/4"	B3	HM	PNTD	2	HM	PNTD	2/A9.03	2/A9.03	HW-23	-	
114A	ELECTRICAL	3' - 0"	7' - 0"	0' - 1 3/4"	A1	WD	STND	1	HM	PNTD	2/A9.03	2/A9.03	HW-12	-	
115	WATER	3' - 0"	7' - 0"	0' - 1 3/4"	A1	HM	PNTD	1	HM	PNTD	8/A9.03	9/A9.03	HW-13	-	
121	STUDY	3' - 0"	7' - 0"	0' - 2"	C1	AL/G	PNTD	1	AL	PNTD	6/A9.03	6/A9.03	HW-14	-	ALUMINUM STOREFRONT
122	STUDY	3' - 0"	7' - 0"	0' - 2"	C1	AL/G	PNTD	1	AL	PNTD	6/A9.03	6/A9.03	HW-14	-	ALUMINUM STOREFRONT
123	STUDY	3' - 0"	7' - 0"	0' - 2"	C1	AL/G	PNTD	1	AL	PNTD	6/A9.03	6/A9.03	HW-14	-	ALUMINUM STOREFRONT
124A	QUIET ROOM	3' - 0"	7' - 0"	0' - 2"	C1	AL/G	PNTD	1	AL	PNTD	6/A9.03	6/A9.03	HW-15	-	ALUMINUM STOREFRONT
124B	QUIET ROOM	3' - 0"	7' - 4"	0' - 2"	C1	AL/G	PNTD	1	AL	PNTD	6/A9.03 - 3/A6.03	6/A9.03 - 7/A9.03	HW-19	-	ALUMINUM STOREFRONT
125	CHILDREN'S	3' - 0"	7' - 4"	0' - 2"	C1	AL/G	PNTD	1	AL	PNTD	12/A9.03	3/A7.03 - 6/A9.03	HW-20	-	ALUMINUM STOREFRONT
126	FAM. RESTROOM	3' - 0"	7' - 0"	0' - 1 3/4"	A1	WD	STND	1	HM	PNTD	5/A9.03	3/A9.03	HW-16	-	
127	STORAGE	3' - 0"	7' - 0"	0' - 1 3/4"	A1	WD	STND	1	HM	PNTD	2/A9.03	2/A9.03	HW-17	-	
128	READING GARDEN	3' - 2"	8' - 3"	0' - 1 3/4"	A1	HM	PNTD	3	HM	PNTD	8/A11.01	16/A9.03	HW-22	-	READING GARDEN ALTERNATE
129	READING GARDEN	3' - 2"	8' - 3"	0' - 1 3/4"	A1	HM	PNTD	3	HM	PNTD	8/A11.01	16/A9.03	HW-22	-	READING GARDEN ALTERNATE

0 A9.03 SCHEDULE
12" = 1'-0"

ENTEROS DESIGN

314 EXCHANGE ALLEY
PETERSBURG, VA 23804

804.861.1200 P
804.861.1253 F

All ideas, designs, arrangements and plans indicated or represented by this drawing are property of ENTEROS DESIGN, PC; created, evolved and developed for the sole use of this project. These ideas, design arrangements and/or plans shall not be used by or disclosed to any person, firm or corporation for any purpose without written permission from ENTEROS DESIGN, PC. Written dimensions on these drawings shall have precedence over scaled dimensions. Contractors shall verify and be responsible for all dimensions and conditions on the job. The Architect must be notified of any variations from the dimensions and conditions shown on these drawings.
© 2016 ENTEROS DESIGN, PC

WILLIAMSON ROAD LIBRARY

3837 Williamson Road, Roanoke, VA 24012

CONSTRUCTION DOCUMENTS

REVISIONS:

DOOR SCHEDULE

PROJ. NO.:156003 DRAWN BY:BB
DATE: 04.13.16

COMMONWEALTH OF VIRGINIA
GILBERT WILBURN ENTZMINGER
Lic. No. 011615
4/13/16
ARCHITECT

A9.03

FINISH KEY

Abbreviation	Description	Manufacturer	Product Line/Number	Color Name/Number	Size (Nominal)	Comments
ACST. FAB	ACOUSTIC FABRIC (FOR WALL PANELS)	MAHARAM	MESSENGER	080 PENSIVE	54" WIDTH	
ACT-1	ACOUSTIC CEIILING TILE	ARMSTRONG	ULTIMA	WHITE	2' X 2'	
ACT-2	ACOUSTIC CEIILING TILE	ARMSTRONG	OPTIMA	WHITE	4' X 4'	
CPT-1	CARPET TILE-1, WALK OFF MAT	SHAW	WELCOME II TILE	STERLING	2' X 2'	QUARTER TURN INSTALLATION
CPT-2	CARPET TILE-2	SHAW	DISTORT	INVERT	18" X 36"	PATTERN WITH CPT-8 REF A9.05
CPT-3	CARPET TILE-3	SHAW	JASPER	TOURMALINE	18" X 36"	PATTERN REF A9.05
CPT-4	CARPET TILE-4	SHAW	OVERLAY TILE	CONTOUR	18" X 36"	PATTERN REF A9.05
CPT-5	CARPET TILE-5	TANDUS-CENTIVA	ELEVATE	RED DWARF	2' X 2'	PATTERN REF A9.05
CPT-6	CARPET TILE-6	TANDUS-CENTIVA	DV8	PEACE FROG	18" X 36"	PATTERN REF A9.05
CPT-7	CARPET TILE-7	TANDUS-CENTIVA	GRAVITY	HYDROGEN	2' X 2'	PATTERN REF A9.05
CPT-8	CARPET TILE-8	SHAW	GLITCH	INVERT	9" X 36"	PATTERN WITH CPT-2 REF A9.05
GL-4	3/8" TEMPERED GLASS					
GL-5	3/8" TEMPERED GLASS					
LN-1	LINOLEUM	JOHNSONITE	HARMONIUM XF2/TONALI	217 VENETIAN FRESCO	SHEET	
PL-1	PLASTIC LAMINATE-1	WILSONART	DECORATIVE METALS	SATIN BRUSHED NAT'L ALUM	SHEET	
PL-2	PLASTIC LAMINATE-2					
PNT-1	PAINT-1 OVERALL	SHERWIN WILLIAMS	SW 6183	CONSERVATIVE GRAY	N/A	SUPERSPEC EGGSHELL FINISH
PNT-2	PAINT-2 TRIM	SHERWIN WILLIAMS	SW 7062	ROCK BOTTOM	N/A	SUPERSPEC SEMI-GLOSS FINISH
PNT-3	PAINT-3 ACCENT	SHERWIN WILLIAMS	SW 6502	LOCH BLUE	N/A	SUPERSPEC EGGSHELL FINISH
PNT-4	PAINT-4 ACCENT	SHERWIN WILLIAMS	SW 6500	OPEN SEAS	N/A	SUPERSPEC EGGSHELL FINISH
PNT-5	PAINT-5 ACCENT	SHERWIN WILLIAMS	SW 6219	RAIN	N/A	SUPERSPEC EGGSHELL FINISH
PNT-6	PAINT-6 ACCENT	SHERWIN WILLIAMS	SW 6422	SHAGREEN	N/A	SUPERSPEC EGGSHELL FINISH
PNT-7	PAINT 7-ACCENT	SHERWIN WILLIAMS	SW6712	LUAU GREEN	N/A	SUPERSPEC EGGSHELL FINISH
PNT-8	PAINT 8-ACCENT	SHERWIN WILLIAMS	SW 6600	ENTICING RED	N/A	SUPERSPEC EGGSHELL FINISH
PNT-9	PAINT 9-ACCENT	SHERWIN WILLIAMS	SW 6421	CELERY	N/A	SUPERSPEC EGGSHELL FINISH
PNT-10	PAINT 10-MARKER BOARD PAINT	WOLF GORDON	WINK	ON WHITE	N/A	WINK WALL PAINT ON PNT-12
PNT-11	PAINT 11-ACCENT	SHERWIN WILLIAMS	SW 7072	ONLINE	N/A	SUPERSPEC EGGSHELL FINISH
PNT-12	PAINT-12-CLNG PAINT	SHERWIN WILLIAMS	SW 7008	ALABASTER	N/A	SUPERSPEC EGGSHELL FINISH
PNTD FRT PLYWD	PAINTED FRT PLYWOOD					
PTL-1	PORCELAIN TILE-1	ARCHITECTURAL CERAMICS	CRAG CASTLE	BRIGHT GREY/NATURAL	12" X 24"	8-10 WK LEAD. PATTERN REF A8.01, A8.02, A9.05
PTL-2	PORCELAIN TILE-2	ARCHITECTURAL CERAMICS	ANTHOLOGY STONE	GREY MATTE	12" X 24"	8-10 WK LEAD. PATTERN W/ PTL-8 REF A8.02
PTL-3	PORCELAIN TILE-3	ARCHITECTURAL CERAMICS	MONTICELLO	GRIGIO	12" X 24"	PATTERN REF A8.02
PTL-3BN	PORCELAIN TILE-3 LONG EDGE BULLNOSE	ARCHITECTURAL CERAMICS	MONTICELLO	GRIGIO	4" X12"	LONG EDGE BULLNOSE
PTL-4	PORCELAIN TILE-4	MARAZZI	MIDDLETON SQUARE	URBAN MIST	4" X 12"	PATTERN REF A8.01 & A8.02
PTL-4BN	PORCELAIN TILE-4 LONG EDGE BULLNOSE	MARAZZI	MIDDLETON SQUARE	URBAN MIST	4" X 12"	LONG EDGE BULLNOSE, PATTERN REF A8.01 & A8.02
PTL-5	PORCELAIN TILE-5	AMERICAN OLEAN	GRAPHIC EFFECTS	DEEP PIGMENT	12" X 24"	PATTERN REF A8.01 & A8.02
PTL-6	PORCELAIN TILE-6	ARCHITECTURAL CERAMICS	UNIVERSAL RIPPLE	WHITE, GLOSSY	8"X12"	PATTERN REF A8.02
PTL-7	PORCELAIN TILE-7	MARAZZI	SISTEM C	PISTACCHIO	4" X 12"	PATTERN REF A8.02
PTL-8	PORCELAIN TILE-8	MOSAIC TILE	FLORIM LAYERS LISTELLO	OBSIDIAN	12 "X 12"	PATTERN REF A8.02
PTL-9	PORCELAIN TILE-9	ARCHITECTURAL CERAMICS	CRAG CASTLE	BRIGHT GREY/NATURAL	5"X10"	8-10 WK LEAD. PATTERN REF A8.01, A8.02, A9.05
RB	RUBBER BASE	JOHNSONITE	168	THUNDER	4"	
S.C.	SEALED CONCRETE					
VCT-1	VCT-1	JOHNSONITE	AZROCK	V-220 CAST PEWTER	12" X 12"	PATTERN WITH VCT-2 REF A9.05
VCT-2	VCT-2	JOHNSONITE	AZROCK	V-243 ADIRONDACK BLUE	12" X 12"	PATTERN WITH VCT-1 REF A9.05
WB-1	WOOD BASE, STAINED-1		MAPLE HDWD	STND TO MATCH WVWC-1	REF ELEVS	SUBMIT SAMPLES FOR APPROVAL
WB-2	WOOD BASE, STAINED-2		MAPLE HDWD	STND TO MATCH MILLWORK	REF ELEVS	SUBMIT SAMPLES FOR APPROVAL
WB-3	WOOD BASE STAINED-3		MAPLE HDWD	STND TO MATCH MILLWORK	1 X 8	SUBMIT SAMPLES FOR APPROVAL
WC-1	WALLCOVERING, TACKBOARD	NATIONAL WALLCOVERING	WRITE WALLS TACK NOW	TAN LINES TN-02	SHEET	PROVIDE WWJTRIM, REF 9/A8.07
WD-1	WOOD, STAINED-1		MAPLE HDWD	STND TO MATCH WVWC-1	VARIES	SUBMIT SAMPLES FOR APPROVAL
WD-2	WOOD, STAINED-2		MAPLE HDWD	STND TO MATCH MILLWORK	VARIES	SUBMIT SAMPLES FOR APPROVAL
WVWC-1	WOOD VENEER WALLCOVERING	NATIONAL WALLCOVERING	SANFOOT	PLAIN CUT MAPLE	SHEET	

FINISH SCHEDULE

#	ROOM NAME	FLOOR	WALL FINISH NORTH	WALL FINISH EAST	WALL FINISH SOUTH	WALL FINISH WEST	BASE	CEILING	COMMENTS
100	ARRIVAL	PTL-1, PTL-9, CPT-1	PNTD GYP, GLZNG, MASONRY	PNTD GYP, MASONRY	PNTD GYP, GLZNG, MASONRY	PNTD GYP, ACST FAB	WB-3	ACT-2, PNTD GYP	
100A	VESTIBULE	CPT-1	PNTD GYP, GLZNG, MASONRY	PNTD GYP, MASONRY	PNTD GYP, GLZNG	PNTD GYP, MASONRY	WB-3	PNTD GYP	
101	WOMENS' RESTROOM	PTL-1	PTL-4, PTL-4BN, PTL-5, PNTD GYP	PTL-4, PNTD GYP	PTL-4, PTL-4BN, PTL-5, PNTD GYP	PTL-4, PTL-4BN, PNTD GYP	N/A	PNTD GYP	TILE WALL TILE TO FLOOR
102	MEN'S RESTROOM	PTL-1	PTL-4, PTL-4BN, PTL-5, PNTD GYP	PTL-4, PNTD GYP	PTL-4, PTL-4BN, PTL-5, PNTD GYP	PTL-4, PTL-4BN, PNTD GYP	N/A	PNTD GYP	TILE WALL TILE TO FLOOR
103	COMMUNITY ROOM	CPT-2, CPT-8, LN-1	PNTD GYP, GLZNG	PNTD GYP, ACST FAB, GLZNG	PNTD GYP	PNTD GYP, ACST FAB	WB-3	ACT-1, PNTD GYP	
104	STORAGE & AV	VCT-1	PNTD GYP	PNTD GYP	PNTD GYP	PNTD GYP	RB	ACT-1	
105	NEW BOOKS	CPT-4	PNTD GYP	PNTD GYP, GLZNG	PNTD GYP, WVWC-1, WD-2, GLZNG	N/A	RB/WB-1	ACT-1, PNTD GYP	
106	YOUNG ADULTS	CPT-6	PNTD GYP, WVWC-1, WD-2, GLZNG	PNTD GYP, PNT-10 (MARKER BD), GLZNG	PNTD GYP, GLZNG	PNTD GYP, GLZNG	RB/WB-1/WB-2	ACT-1, PNTD GYP	
107	JANITOR	VCT-1	PNTD GYP	PNTD GYP	PNTD GYP	PNTD GYP	RB	ACT-1	
108	CIRCULATION	CPT-4	PNTD GYP	PNTD GYP	PNTD GYP, WVWC-1	PNTD GYP	RB/WB-1	ACT-1, PNTD GYP, WVWC-1	
109	WORK ROOM	VCT-1, VCT-2	PNTD GYP	PNTD GYP	PNTD GYP	PNTD GYP	RB	ACT-1	
110	OFFICE	CPT-3	PNTD GYP	PNTD GYP	PNTD GYP, GLZNG	PNTD GYP	RB	ACT-1	
111	STORAGE	VCT-1	PNTD GYP, GLZNG	PNTD GYP	PNTD GYP	PNTD GYP	RB	ACT-1	
112	STAFF RESTROOM	PTL-3	PNTD GYP	PNTD GYP	PNTD GYP	PNTD GYP	PTL-3BN	PNTD GYP	
113	BREAK ROOM	VCT-1, VCT-2	PNTD GYP	PNTD GYP	PNTD GYP	PNTD GYP, GLZNG	RB	ACT-1	
113B	DATA CLOSET	VCT-1, VCT-2	PNTD GYP	PNTD GYP	PNTD GYP	PNTD GYP	RB	ACT-1	
114	ELECTRICAL	S.C.	PNTD GYP	PNTD GYP	PNTD GYP	PNTD GYP	RB	EXPOSED	
115	WATER	SEALED CONC	PNTD GYP	PNTD GYP	PNTD GYP	PNTD GYP	RB	EXPOSED	
116	COMPUTERS	CPT-4	WVWC-1	PNTD GYP, WVWC-1	PNTD GYP	N/A	RB/WB-1	ACT-1, PNTD GYP	
117	FICTION	CPT-4	N/A	N/A	PNTD GYP	N/A	RB	ACT-1, PNTD GYP	
118	NON-PRINT MEDIA	CPT-4	PNTD GYP	N/A	N/A	N/A	RB	ACT-1, PNTD GYP	
119	PERIODICALS	CPT-4	N/A	N/A	PNTD GYP, GLZNG	PNTD GYP, WD-2, GLZNG	RB/WB-2	ACT-1, PNTD GYP	
120	NON-FICTION	CPT-4	PNTD GYP, GLZNG	PNTD GYP, GLZNG	PNTD GYP	PNTD GYP, GLZNG	RB	ACT-1, PNTD GYP	
121	STUDY	CPT-3	PNTD GYP, GLZNG	PNTD GYP	PNTD GYP, GLZNG	PNTD GYP, GLZNG	RB	ACT-1	
122	STUDY	CPT-3	PNTD GYP, GLZNG	PNTD GYP	PNTD GYP, GLZNG	PNTD GYP, GLZNG	RB	ACT-1	
123	STUDY	CPT-3	PNTD GYP, GLZNG	PNTD GYP	PNTD GYP, GLZNG	PNTD GYP, GLZNG	RB	ACT-1	
124	QUIET ROOM	CPT-3	PNTD GYP, GLZNG	PNTD GYP, GLZNG	PNTD GYP	PNTD GYP, GLZNG	RB	ACT-1	
125	CHILDREN'S	CPT-5, CPT-7	PNTD GYP, GLZNG	PNTD GYP, GLZNG	PNTD GYP, GLZNG	PNTD GYP, GLZNG	RB/WB-2	ACT-1, PNTD GYP	
126	FAM. RESTROOM	PTL-2, PTL-8	PTL-6, PTL-7, PNTD GYP	PTL-6, PTL-7, PNTD GYP	PTL-6, PTL-7, PTL-8, PNTD GYP	PTL-6, PTL-7, PTL-8, PNTD GYP	PTL-7	PNTD GYP	PNTD WALL & CLNG MURAL BY OWNER
137	STORAGE	VCT-1	PNTD GYP	PNTD GYP	PNTD GYP	PNTD GYP	RB	ACT-1	

FINISH PATTERN LEGEND

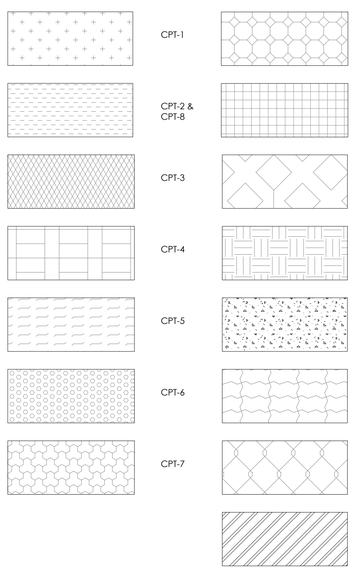

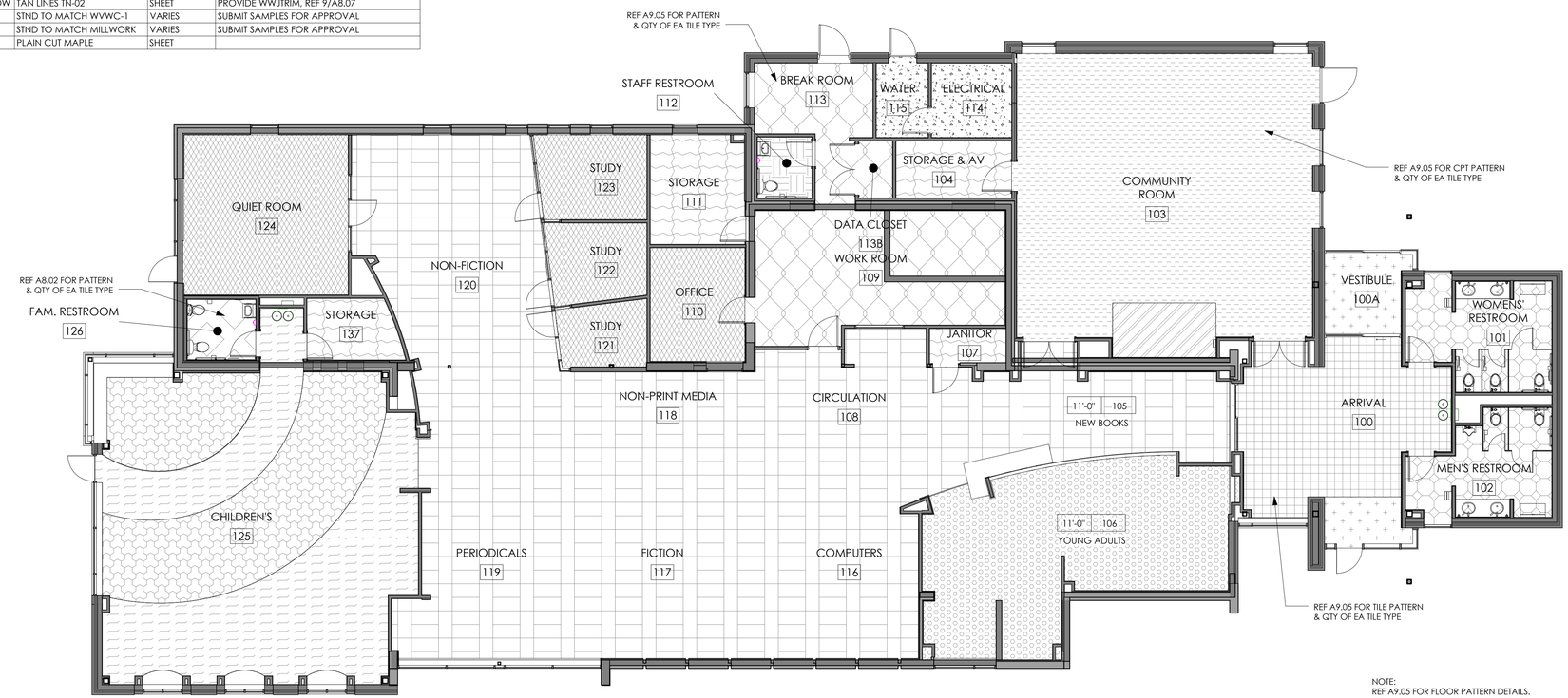

NOTE:
REF A9.05 FOR FLOOR PATTERN DETAILS.
REF A9.05 & A10.01 FOR PAINT LOCATIONS

1 / A9.04 FINISH PLAN
1/8" = 1'-0"

ENTEROS DESIGN

314 EXCHANGE ALLEY
PETERSBURG, VA 23804

804.861.1200 P
804.861.1253 F

All ideas, designs, arrangements and plans indicated or represented by this drawing are property of ENTEROS DESIGN, PC; created, evolved and developed for the sole use of this project. These ideas, design arrangements and/or plans shall not be used by or disclosed to any person, firm or corporation for any purpose without written permission from ENTEROS DESIGN, PC. Written dimensions on these drawings shall have precedence over scaled dimensions. Contractors shall verify and be responsible for all dimensions and conditions on the job. The Architect must be notified of any variations from the dimensions and conditions shown on these drawings.
© 2016 ENTEROS DESIGN, PC

WILLIAMSON ROAD LIBRARY
3837 Williamson Road, Roanoke, VA 24012

CONSTRUCTION DOCUMENTS

REVISIONS:

FINISH SCHEDULE

PROJ. NO.:156003 DRAWN BY:BB
DATE: 04.13.16

COMMONWEALTH OF VIRGINIA
GILLETT WILLIAMS ENTERPRISES
Lic. No. 011615
4/13/16
ARCHITECT

A9.04

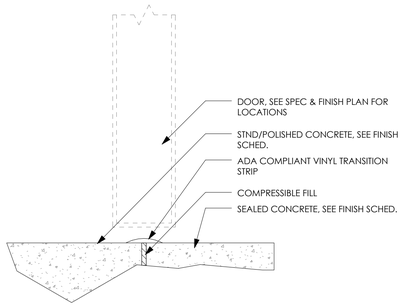

5 A9.05 TRANSITIONS-CONC TO CONC
6" = 1'-0"

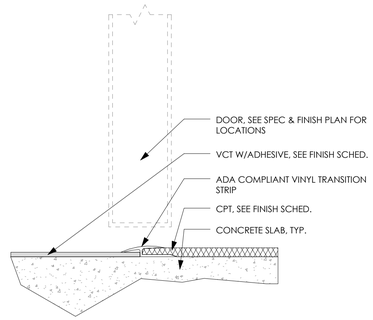

1 A9.05 TRANSITIONS-CPT TO VCT
6" = 1'-0"

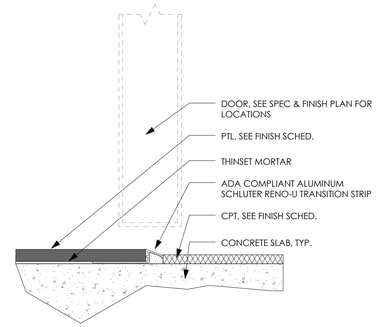

2 A9.05 TRANSITIONS-CPT TO PTL
6" = 1'-0"

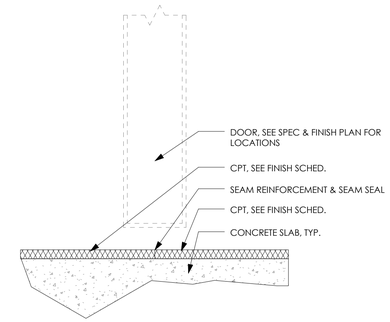

3 A9.05 TRANSITIONS-CPT TO CPT
6" = 1'-0"

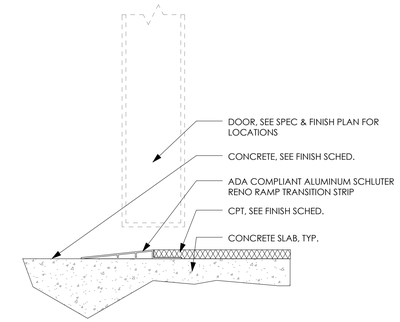

4 A9.05 TRANSITIONS-CPT TO CONC
6" = 1'-0"

6 A9.05 FINISH PLAN-FLOOR PATTERNS
1/8" = 1'-0"

ENTEROS DESIGN
314 EXCHANGE ALLEY
PETERSBURG, VA 23804
804.861.1200 P
804.861.1253 F

All ideas, designs, arrangements and plans indicated or represented by this drawing are property of ENTEROS DESIGN, PC; created, evolved and developed for the sole use of this project. These ideas, design arrangements and/or plans shall not be used by or disclosed to any person, firm or corporation for any purpose without written permission from ENTEROS DESIGN, PC. Written dimensions on these drawings shall have precedence over scaled dimensions. Contractors shall verify and be responsible for all dimensions and conditions on the job. The Architect must be notified of any variations from the dimensions and conditions shown on these drawings.
© 2016 ENTEROS DESIGN, PC

WILLIAMSON ROAD LIBRARY
3837 Williamson Road, Roanoke, VA 24012

CONSTRUCTION DOCUMENTS

REVISIONS:

FINISH TRANSITIONS

PROJ. NO.:156003 DRAWN BY:BB
DATE: 04.13.16

COMMONWEALTH OF VIRGINIA
GILBERT CELICIO ENCINGER
Lic. No. 011615
4/13/16
ARCHITECT

A9.05

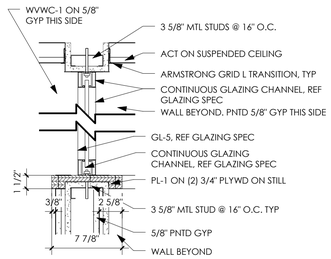

6 A10.01 CEILING DETAIL
1 1/2" = 1'-0"

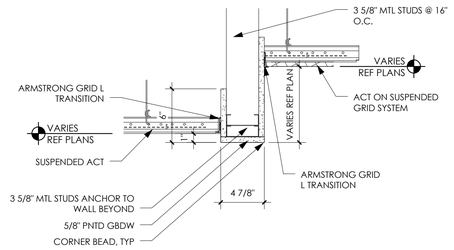

5 A10.01 CEILING DETAIL
1 1/2" = 1'-0"

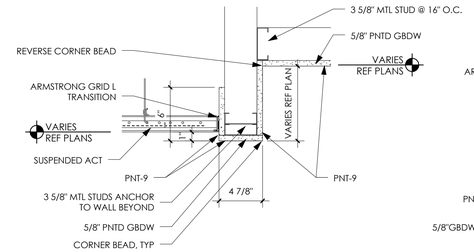

4 A10.01 CEILING DETAIL
1 1/2" = 1'-0"

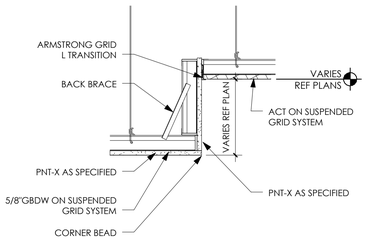

3 A10.01 CEILING DETAIL
1 1/2" = 1'-0"

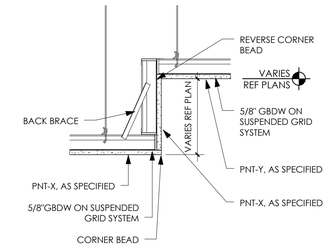

2 A10.01 CEILING DETAIL
1 1/2" = 1'-0"

GENERAL NOTES:

1. CENTER LIGHTS ON CEILING TILES, TYP.
2. COORDINATE FIXTURE TYPES AND QUANTITIES WITH ELECTRICAL DRAWINGS
3. PROVIDE ALL CODE REQUIRED FIXTURES AND DEVICES.
4. COORDINATE AIR REGISTER LOCATIONS AND QUANTITIES WITH MECHANICAL DRAWINGS.
5. REFER TO FINISH SCHEDULE FOR ADDITIONAL FINISH INFORMATION.
6. REFER TO SECTIONS, PLANS AND ELEVATIONS FOR ADDITIONAL NOTES AND DIMENSIONS RELATING TO CEILING FINISHES AND FIXTURES.
7. CENTER GRIDS IN ROOMS AND SPACES UNLESS OTHERWISE NOTED.

PATTERN LEGEND	
	PNTD GYP BOARD
	2X2 ACOUSTIC CEILING TILE
	4X4 ACOUSTIC CEILING TILE

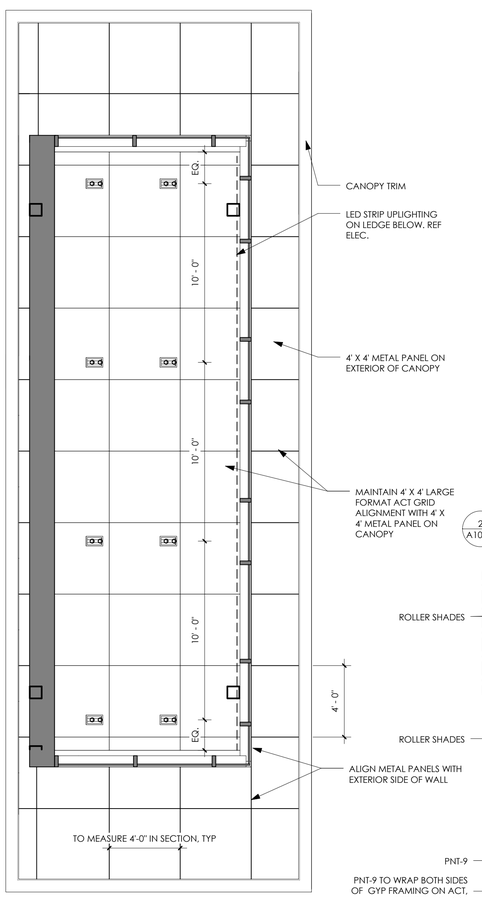

7 A10.01 CANOPY RCP
1/4" = 1'-0"

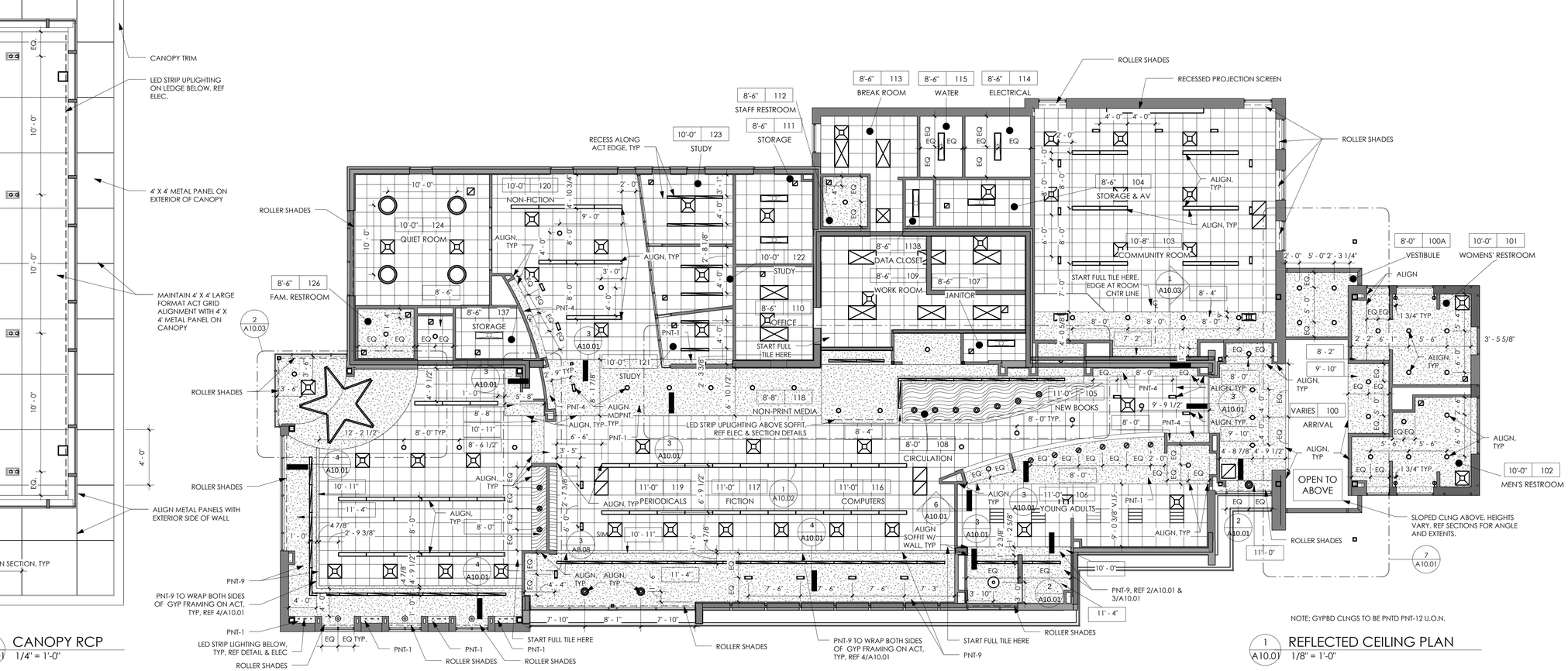

NOTE: GYPBD CLNGS TO BE PNTD PNT-12 U.O.N.

1 A10.01 REFLECTED CEILING PLAN
1/8" = 1'-0"

ENTEROS DESIGN
314 EXCHANGE ALLEY
PETERSBURG, VA 23804
804.861.1200 P
804.861.1253 F

All ideas, designs, arrangements and plans indicated or represented by this drawing are property of ENTEROS DESIGN, PC; created, evolved and developed for the sole use of this project. These ideas, design arrangements and/or plans shall not be used by or disclosed to any person, firm or corporation for any purpose without written permission from ENTEROS DESIGN, PC. Written dimensions on these drawings shall have precedence over scaled dimensions. Contractors shall verify and be responsible for all dimensions and conditions on the job. The Architect must be notified of any variations from the dimensions and conditions shown on these drawings.
© 2016 ENTEROS DESIGN, PC

WILLIAMSON ROAD LIBRARY

3837 Williamson Road, Roanoke, VA 24012

CONSTRUCTION DOCUMENTS

REVISIONS:

REFLECTED CEILING PLAN

PROJ. NO.:156003 DRAWN BY:BB
DATE: 04.13.16

COMMONWEALTH OF VIRGINIA
GILER WILBURN ENTZMINGER
Lic. No. 011615
4/13/16
ARCHITECT

A10.01

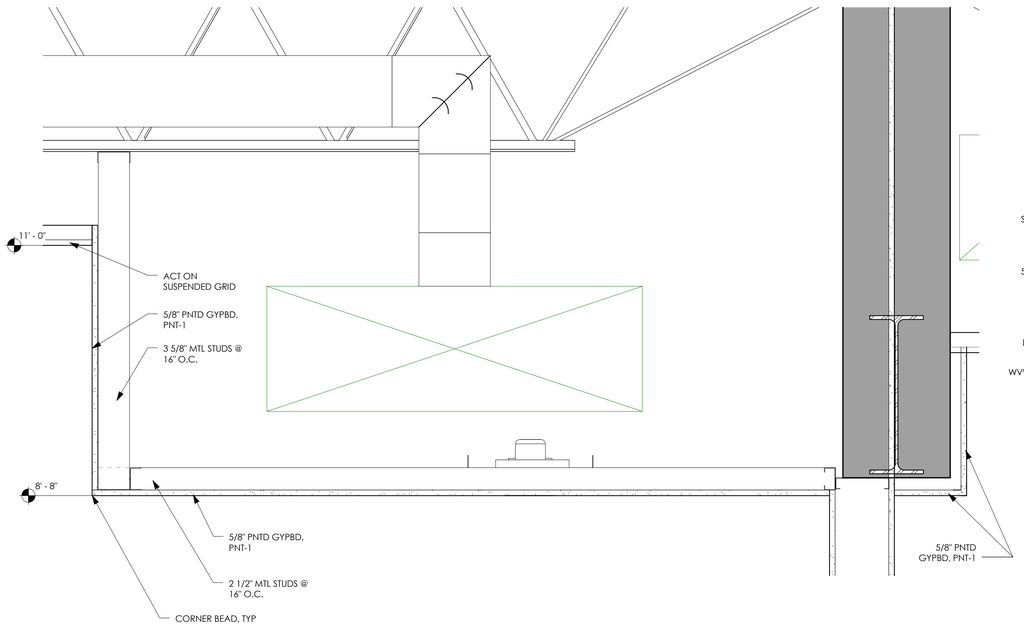

3 A10.02 CEILING DETAIL
1 1/2" = 1'-0"

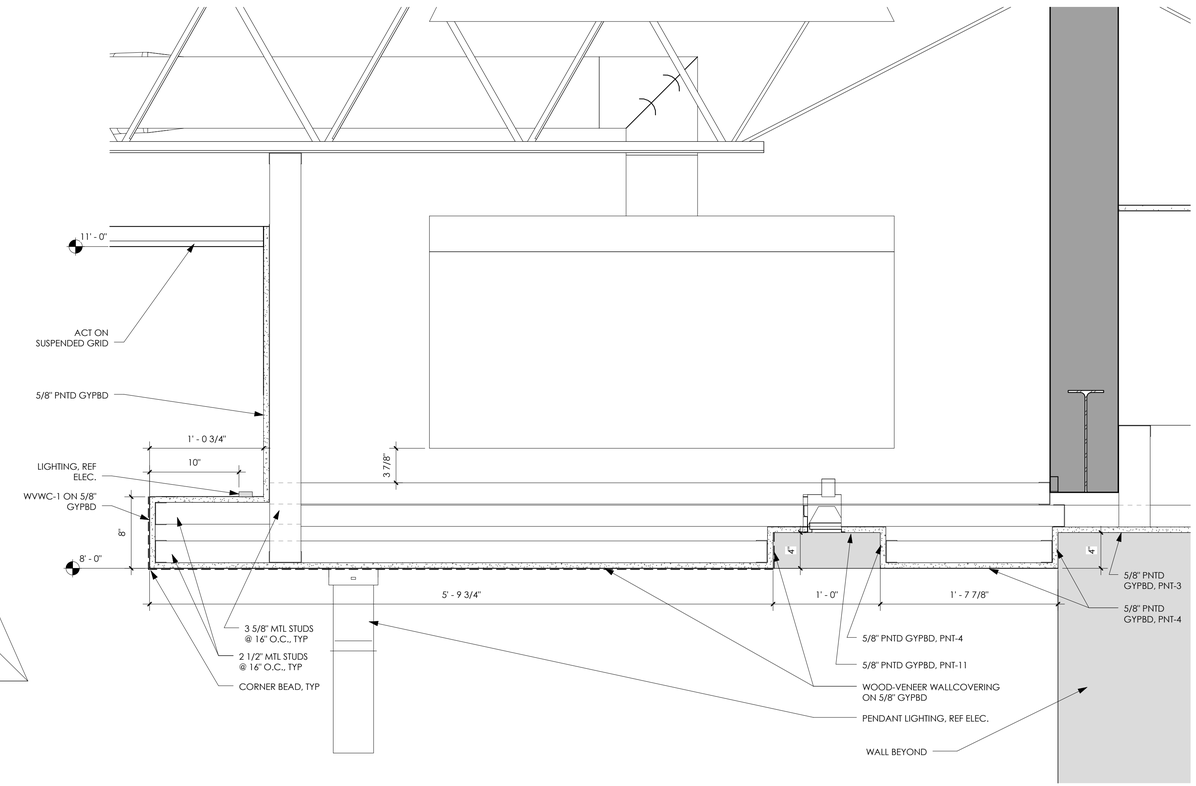

2 A10.02 CEILING DETAIL
1 1/2" = 1'-0"

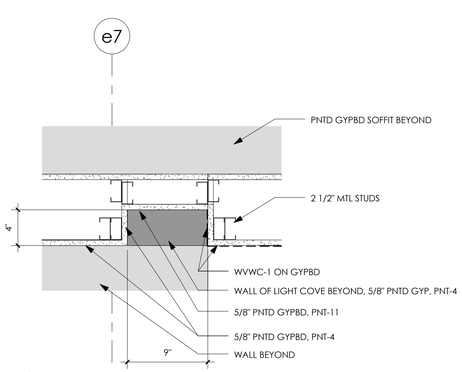

4 A10.02 CIRC SOFFIT
1 1/2" = 1'-0"

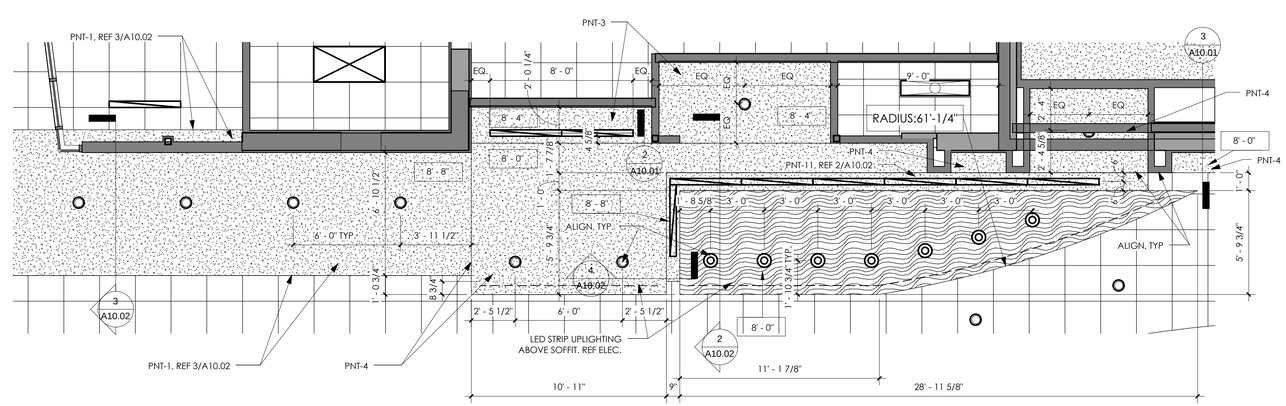

1 A10.02 REFLECTED CEILING PLAN - DETAIL
1/4" = 1'-0"

ENTEROS DESIGN

314 EXCHANGE ALLEY
PETERSBURG, VA 23804

804.861.1200 P
804.861.1253 F

All ideas, designs, arrangements and plans indicated or represented by this drawing are property of ENTEROS DESIGN, PC; created, evolved and developed for the sole use of this project. These ideas, design arrangements and/or plans shall not be used by or disclosed to any person, firm or corporation for any purpose without written permission from ENTEROS DESIGN, PC. Written dimensions on these drawings shall have precedence over scaled dimensions. Contractors shall verify and be responsible for all dimensions and conditions on the job. The Architect must be notified of any variations from the dimensions and conditions shown on these drawings.
© 2016 ENTEROS DESIGN, PC

WILLIAMSON ROAD LIBRARY

3837 Williamson Road, Roanoke, VA 24012

CONSTRUCTION DOCUMENTS

REVISIONS:

CEILING DETAILS

PROJ. NO.:156003 DRAWN BY:BB
DATE: 04.13.16

COMMONWEALTH OF VIRGINIA
GILBERT WILBURN ENTZMINGER
Lic. No. 011615
4/13/16
ARCHITECT

A10.02

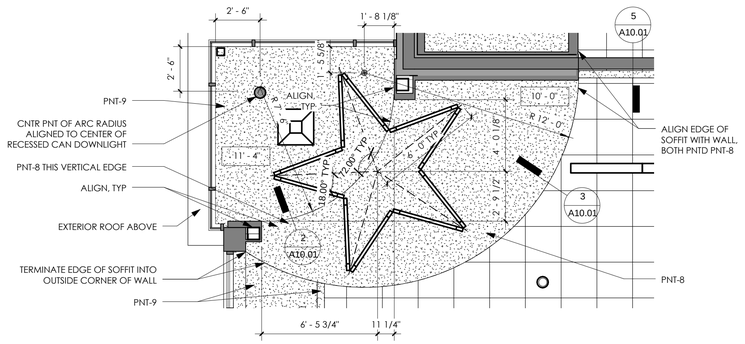

2 A10.03 REFLECTED CEILING PLAN -DETAIL 2
1/4" = 1'-0"

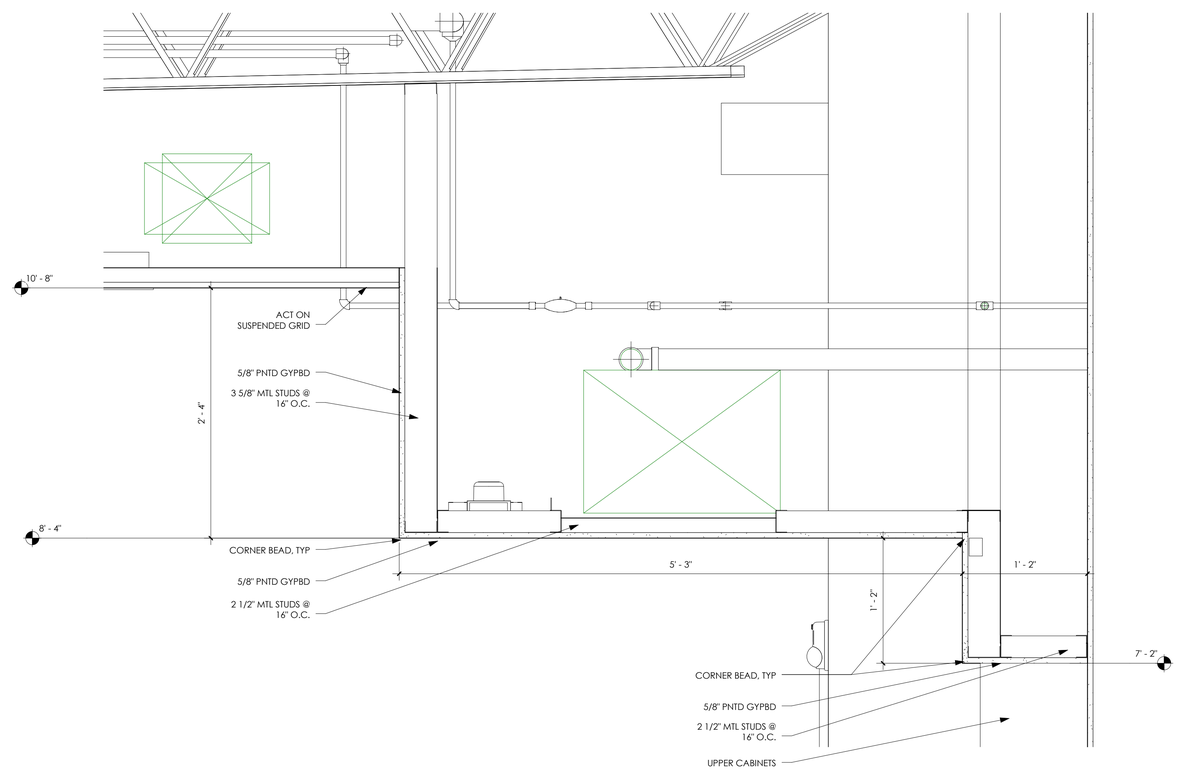

1 A10.03 CEILING DETAIL
1 1/2" = 1'-0"

ENTEROS DESIGN

314 EXCHANGE ALLEY
PETERSBURG, VA 23804

804.861.1200 P
804.861.1253 F

All ideas, designs, arrangements and plans indicated or represented by this drawing are property of ENTEROS DESIGN, PC; created, evolved and developed for the sole use of this project. These ideas, design arrangements and/or plans shall not be used by or disclosed to any person, firm or corporation for any purpose without written permission from ENTEROS DESIGN, PC. Written dimensions on these drawings shall have precedence over scaled dimensions. Contractors shall verify and be responsible for all dimensions and conditions on the job. The Architect must be notified of any variations from the dimensions and conditions shown on these drawings.
© 2016 ENTEROS DESIGN, PC

WILLIAMSON ROAD LIBRARY

3837 Williamson Road, Roanoke, VA 24012

CONSTRUCTION DOCUMENTS

REVISIONS:

CEILING DETAILS

PROJ. NO.:156003 DRAWN BY:BB
DATE: 04.13.16

COMMONWEALTH OF VIRGINIA
GILES POLICKOVSKY BOLLINGER
Lic. No. 011615
4/13/16
ARCHITECT

A10.03

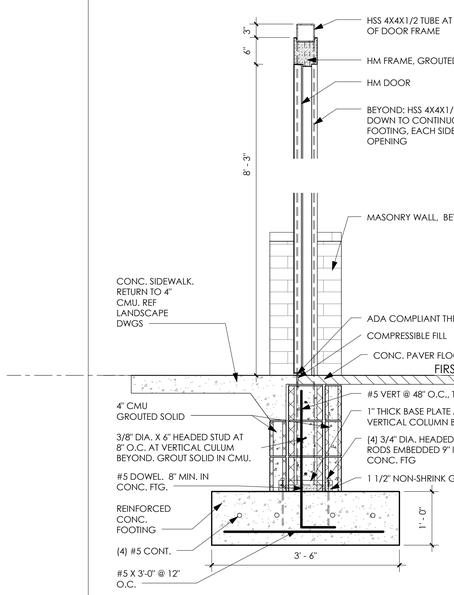

8 A11.01 WALL SECTION ALTERNATE 3
3/4" = 1'-0"

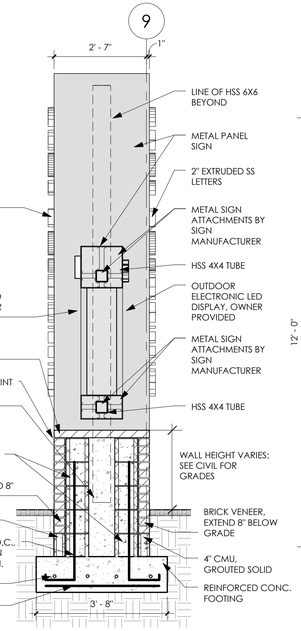

7 A11.01 WALL SECTION ALTERNATE 1
1/2" = 1'-0"

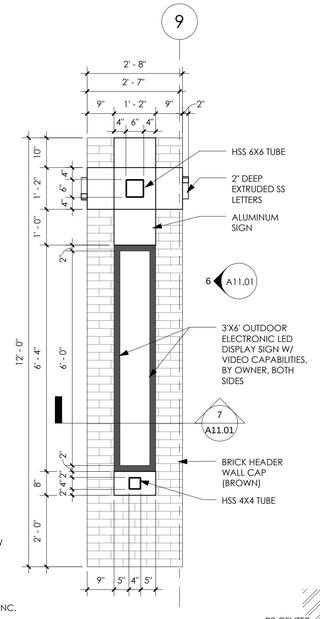

5 A11.01 ENLARGED PLAN ALTERNATE 1
1/2" = 1'-0"

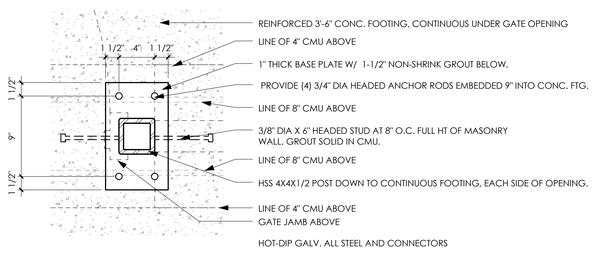

9 A11.01 PLAN DETAIL ALTERNATE 3
1 1/2" = 1'-0"

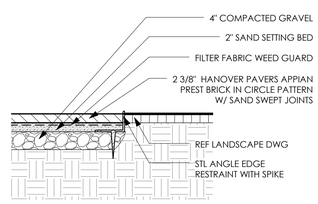

4 A11.01 SECTION DETAIL ALTERNATE 2
3/4" = 1'-0"

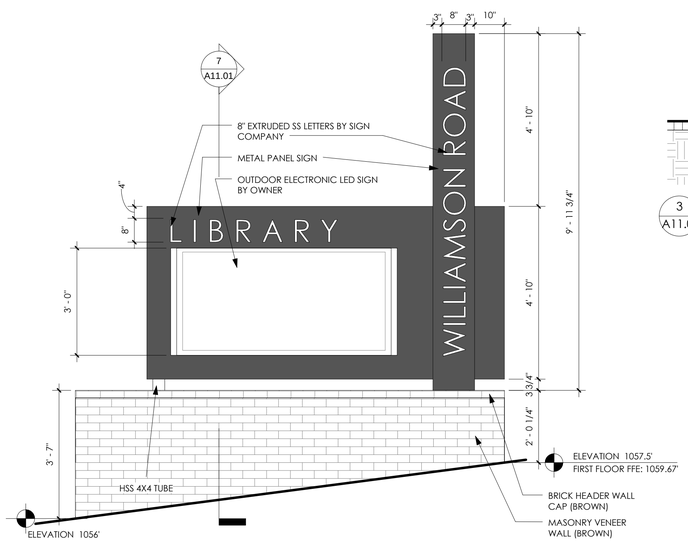

6 A11.01 LIBRARY SIGN ELEVATION ALTERNATE 1
1/2" = 1'-0"

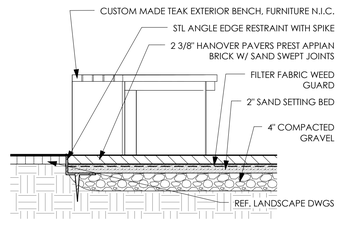

3 A11.01 WALL SECTION ALTERNATE 2
3/4" = 1'-0"

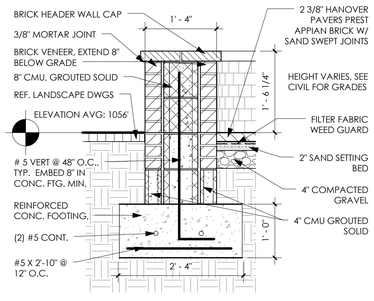

2 A11.01 WALL SECTION ALTERNATE 2
3/4" = 1'-0"

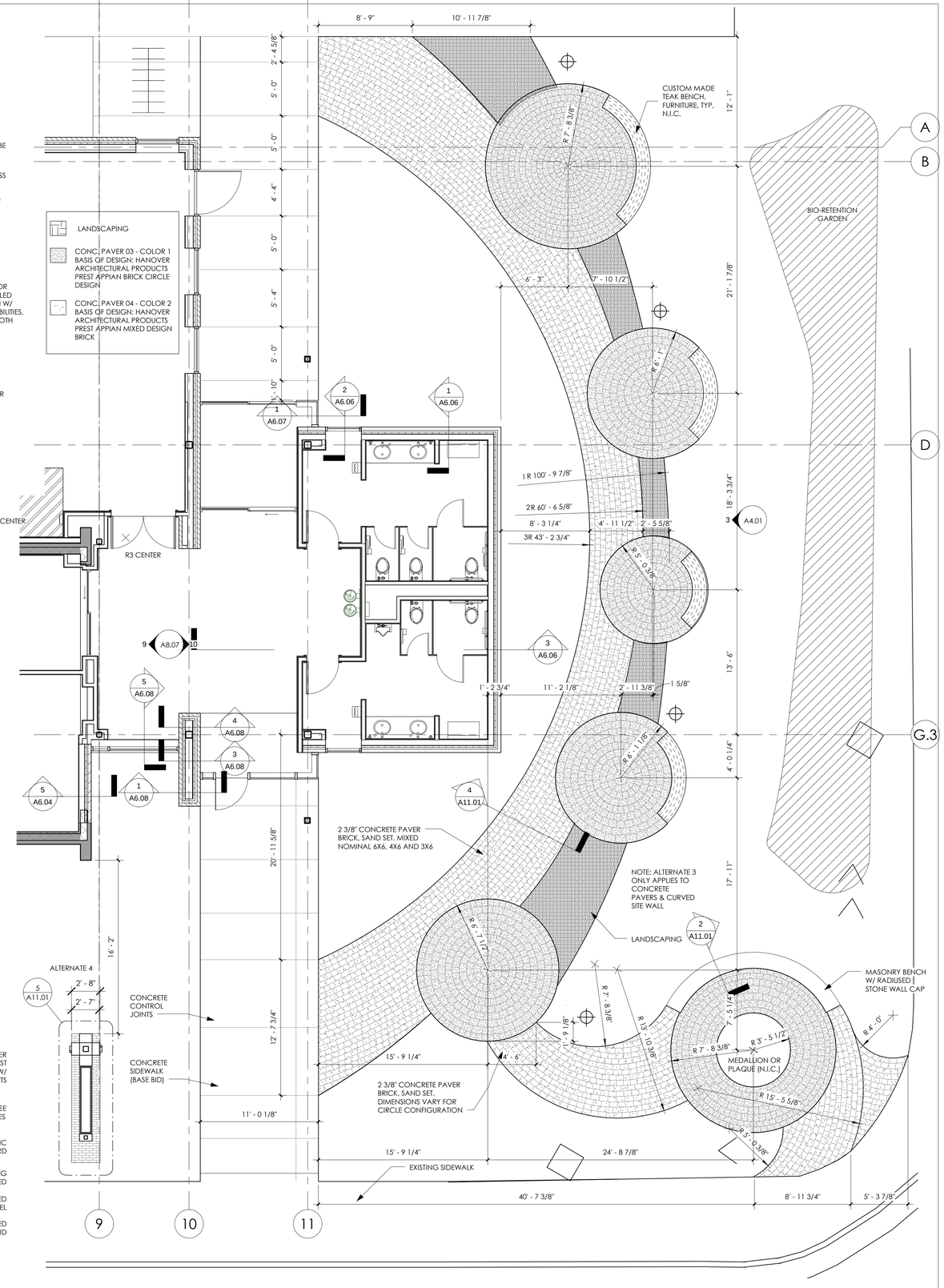

1 A11.01 ENLARGED PLAN ALTERNATE 2
3/16" = 1'-0"

ENTEROS DESIGN

314 EXCHANGE ALLEY
PETERSBURG, VA 23804

804.861.1200 P
804.861.1253 F

All ideas, designs, arrangements and plans indicated or represented by this drawing are property of ENTEROS DESIGN, PC; created, evolved and developed for the sole use of this project. These ideas, design arrangements and/or plans shall not be used by or disclosed to any person, firm or corporation for any purpose without written permission from ENTEROS DESIGN, PC. Written dimensions on these drawings shall have precedence over scaled dimensions. Contractors shall verify and be responsible for all dimensions and conditions on the job. The Architect must be notified of any variations from the dimensions and conditions shown on these drawings.
© 2016 ENTEROS DESIGN, PC

WILLIAMSON ROAD LIBRARY

3837 Williamson Road, Roanoke, VA 24012

CONSTRUCTION DOCUMENTS

REVISIONS:

ALTERNATES

PROJ. NO.:156003 DRAWN BY:JRG
DATE: 04.13.16

COMMONWEALTH OF VIRGINIA
GILBERT WILBURN ENTZMINGER
Lic. No. 011615
4/13/16
ARCHITECT

A11.01

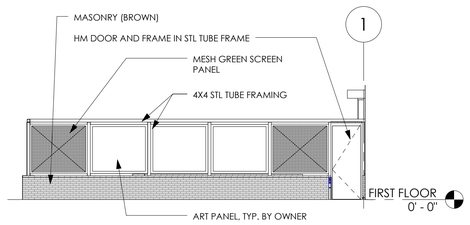

10 A11.02 SOUTH GARDEN ELEVATION
1/8" = 1'-0"

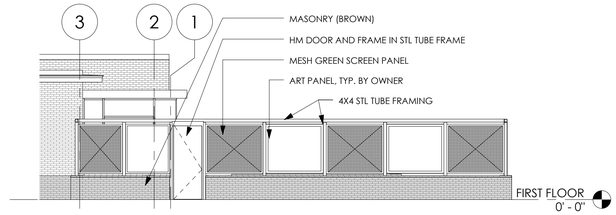

5 A11.02 NORTH GARDEN ELEVATION
1/8" = 1'-0"

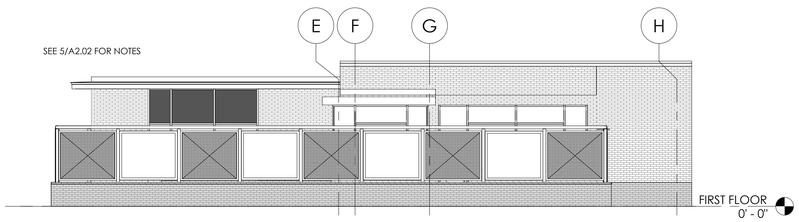

9 A11.02 WEST GARDEN ELEVATION
1/8" = 1'-0"

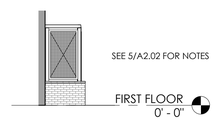

4 A11.02 EAST GARDEN ELEVATION
1/8" = 1'-0"

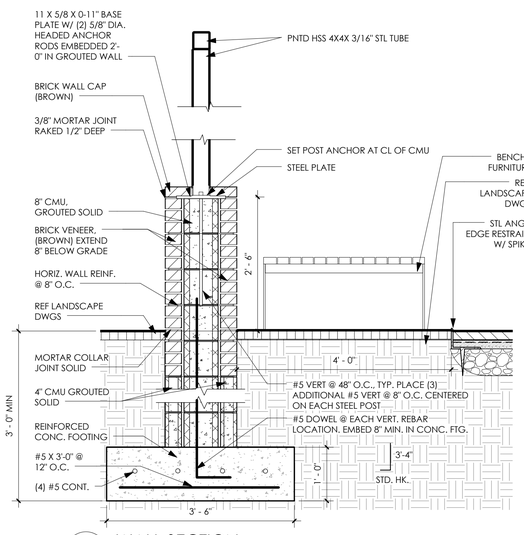

8 A11.02 WALL SECTION
3/4" = 1'-0"

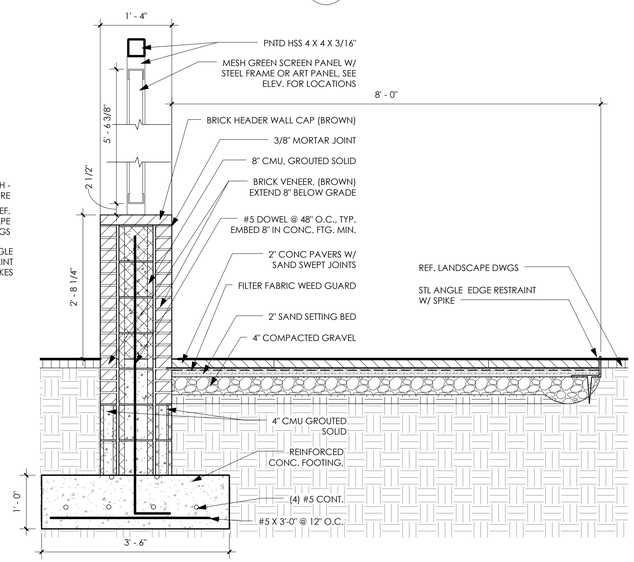

3 A11.02 WALL SECTION
3/4" = 1'-0"

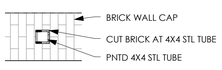

7 A11.02 PLAN DETAIL
1/2" = 1'-0"

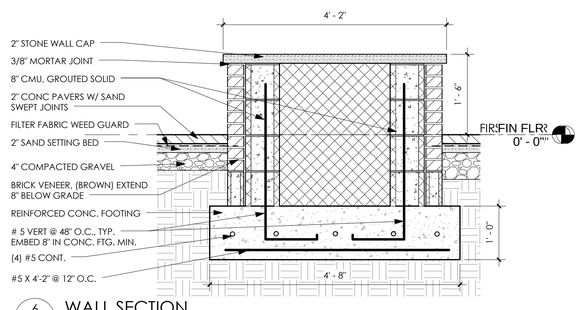

6 A11.02 WALL SECTION
3/4" = 1'-0"

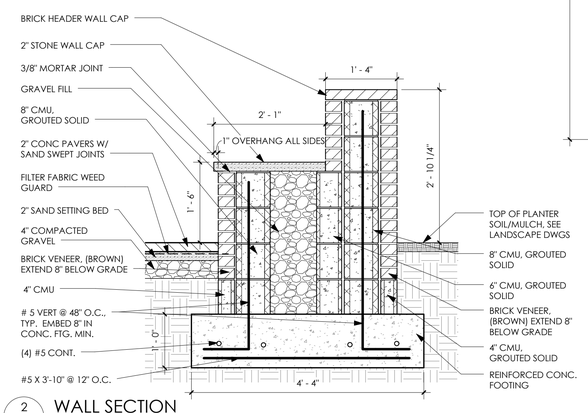

2 A11.02 WALL SECTION
3/4" = 1'-0"

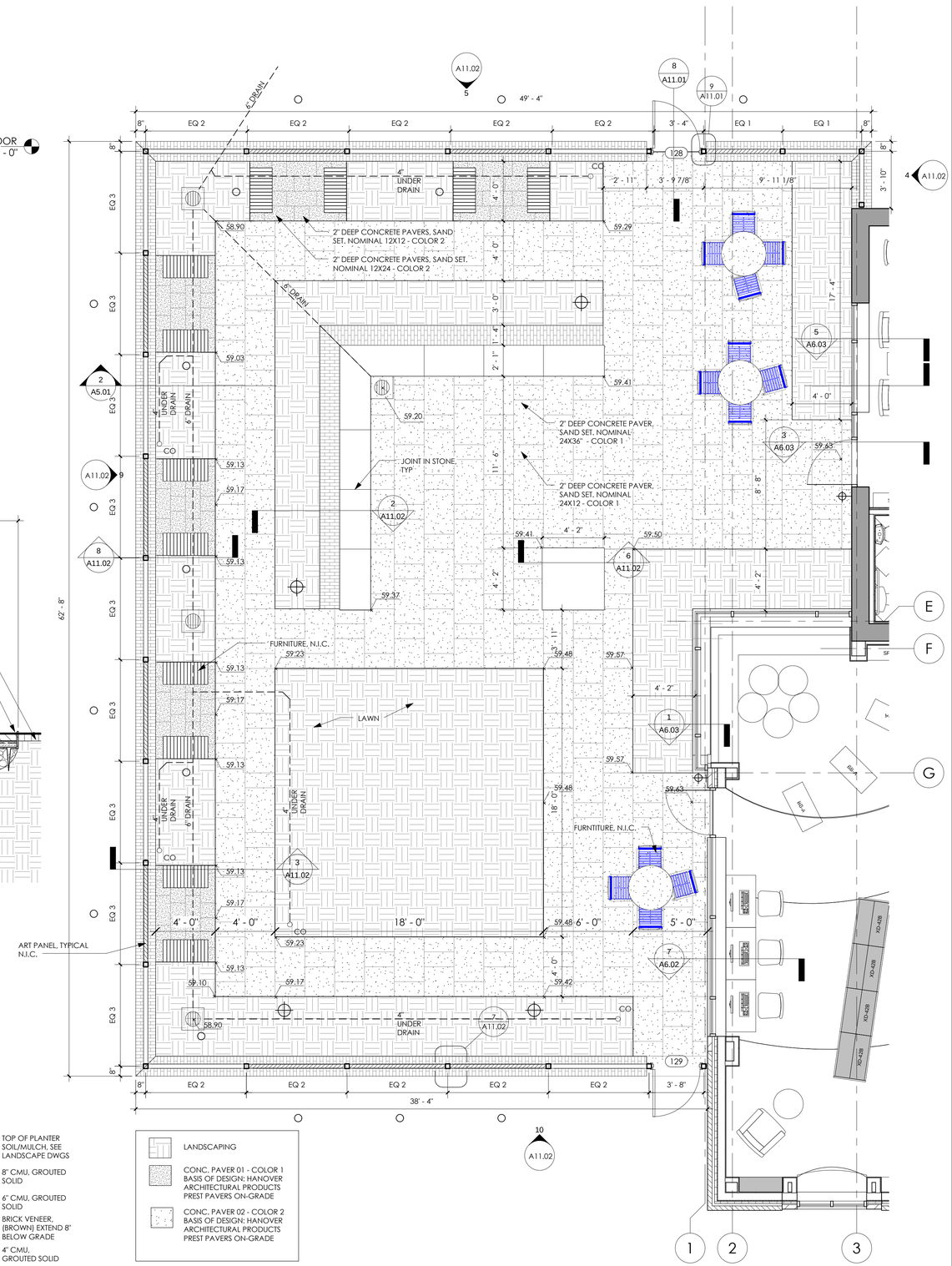

1 A11.02 READING GARDEN - ALTERNATE 3
1/4" = 1'-0"

ENTEROS DESIGN

314 EXCHANGE ALLEY
PETERSBURG, VA 23804

804.861.1200 P
804.861.1253 F

All ideas, designs, arrangements and plans indicated or represented by this drawing are property of ENTEROS DESIGN, PC. Written dimensions on these drawings shall have precedence over scaled dimensions. Contractors shall verify and be responsible for all dimensions and conditions on the job. The Architect must be notified of any variations from the dimensions and conditions shown on these drawings. © 2016 ENTEROS DESIGN, PC

WILLIAMSON ROAD LIBRARY

3837 Williamson Road, Roanoke, VA 24012

CONSTRUCTION DOCUMENTS

REVISIONS:

ALTERNATES

PROJ. NO.:156003 DRAWN BY:JRG
DATE: 04.13.16

COMMONWEALTH OF VIRGINIA
GILBERT WILBURN LANDRUM
Lic. No. 011615
4/13/16
ARCHITECT

A11.02

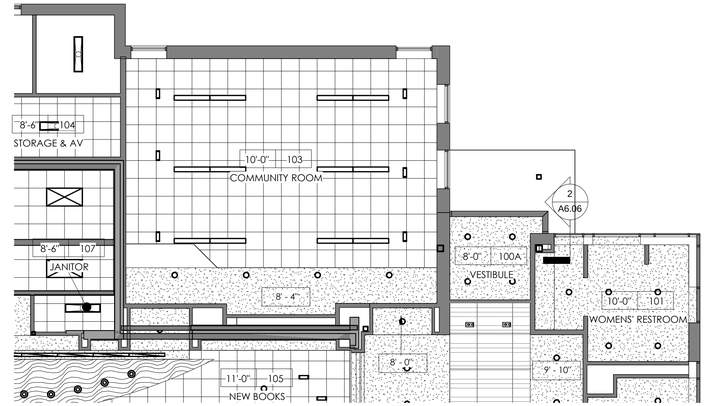

4 A11.03 RCP ALTERNATE - 6
1/8" = 1'-0"

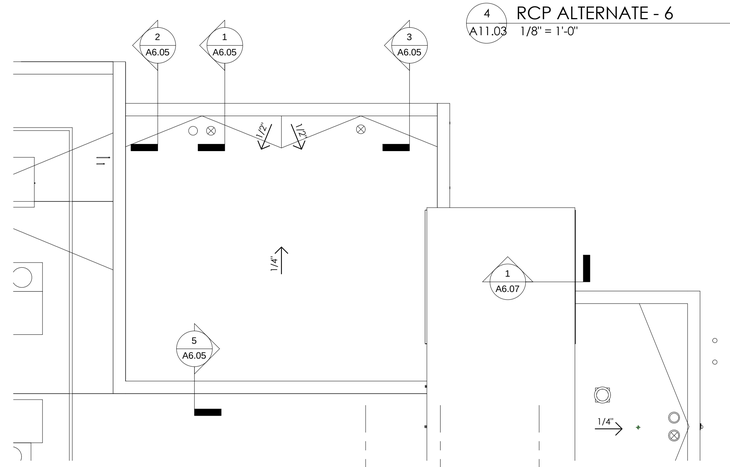

2 A11.03 ROOF PLAN ALTERNATE - 6
1/8" = 1'-0"

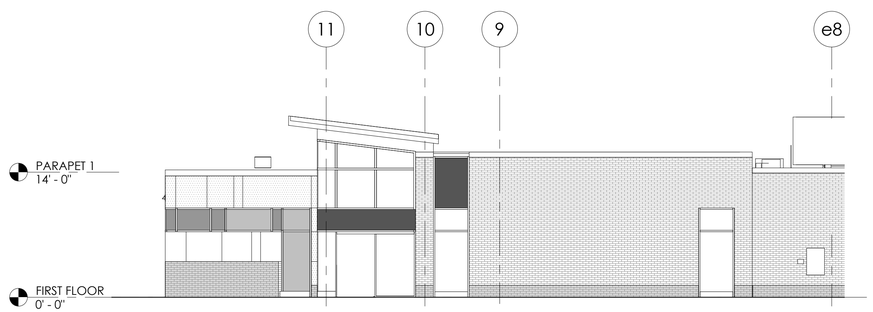

5 A11.03 NORTH ELEVATION ALTERNATE - 6
1/8" = 1'-0"

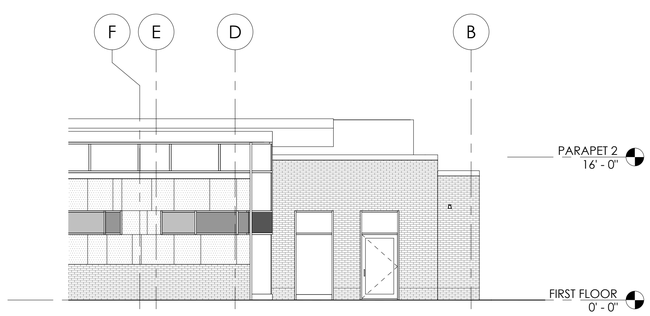

3 A11.03 EAST ELEVATION ALTERNATE - 6
1/8" = 1'-0"

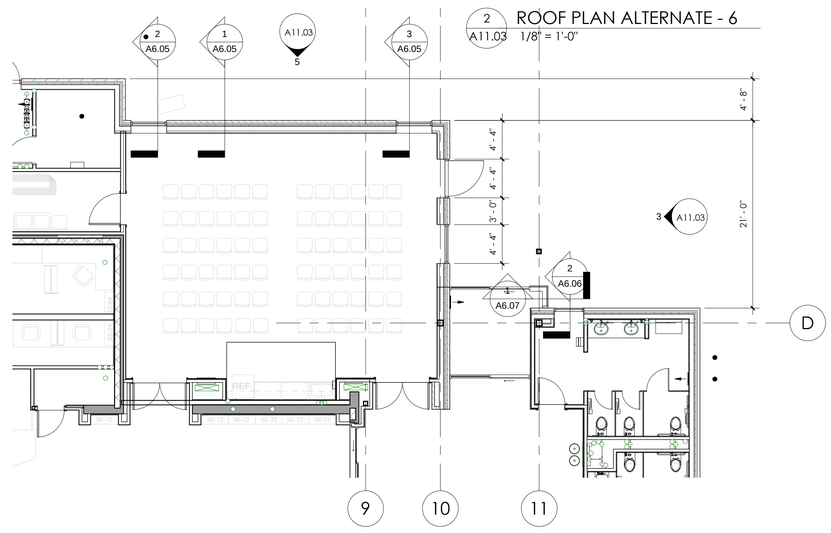

1 A11.03 BUILDING PLAN ALTERNATE - 6
1/8" = 1'-0"

ENTEROS DESIGN

314 EXCHANGE ALLEY
PETERSBURG, VA 23804

804.861.1200 P
804.861.1253 F

All ideas, designs, arrangements and plans indicated or represented by this drawing are property of ENTEROS DESIGN, PC; created, evolved and developed for the sole use of this project. These ideas, design arrangements and/or plans shall not be used by or disclosed to any person, firm or corporation for any purpose without written permission from ENTEROS DESIGN, PC. Written dimensions on these drawings shall have precedence over scaled dimensions. Contractors shall verify and be responsible for all dimensions and conditions on the job. The Architect must be notified of any variations from the dimensions and conditions shown on these drawings.
© 2016 ENTEROS DESIGN, PC

WILLIAMSON ROAD LIBRARY

3837 Williamson Road, Roanoke, VA 24012

CONSTRUCTION DOCUMENTS

REVISIONS:

ALTERNATES

PROJ. NO.:156003 DRAWN BY:TRF
DATE: 04.13.16

COMMONWEALTH OF VIRGINIA
GILBERT WILBURN ENTZMINGER
Lic. No. 011615
4/13/16
ARCHITECT

A11.03

GENERAL STRUCTURAL NOTES

1. ALL SHALL BE PREFORMED IN ACCORDANCE WITH THE VIRGINIA UNIFORM STATEWIDE BUILDING CODE (VUSBC), EFFECTIVE JULY 14, 2014.

   A. NEW CONSTRUCTION- PART 1 OF VUSBC- "VIRGINIA CONSTRUCTION CODE"

      1. ADOPTION OF CHAPTERS 2-35 OF 2012 EDITION OF THE INTERNATIONAL BUILDING CODE (IBC) WITH VIRGINIA AMMENDMENTS.

   B. RENOVATION/ ALTERATION- PART II OF THE VUSBC- "VIRGINIA REHABILITATION CODE"

      1. ADOPTION OF CHAPTERS 2-15 OF THE 2012 OF THE INTERNATIONAL EXISTING BUILDING CODE (IEBC) WITH VIRGINIA AMMENDMENTS.

         a. CLASSIFICATION OF WORK FOR THIS PROJECT = ALTERATION-LEVEL 3

   NO LOADS IN EXCESS OF THE DESIGN LIVE LOADS LISTED SHALL BE IMPOSED UPON ANY AREA DURING CONSTRUCTION, UNLESS ADEQUATE SHORING OR OTHER MEANS IS PROVIDED TO SUPPORT THE EXCESSIVE LOADS.

   IF ANY CHANGES ARE MADE IN WEIGHT AND/OR LOCATION OF POINTS OF SUPPORT OF EQUIPMENT, THE CONTRACTOR SHALL FURNISH DETAILS OF CHANGES TO THE ARCHITECT FOR REVIEW AND NECESSARY MODIFICATIONS.

   TEMPORARY BRACING, GUY WIRES, SHORING, ETC., SHALL BE USED AS NECESSARY TO RESIST ALL LOADS TO WHICH THE STRUCTURE MAY BE SUBJECTED DURING CONSTRUCTION, INCLUDING EQUIPMENT AND ITS OPERATION.

   THE STRUCTURE IS DESIGNED TO BE SELF-SUPPORTING AND STABLE AFTER THE BUILDING IS FULLY COMPLETED. THE ERECTION PROCEDURE AND SEQUENCE INCLUDING THE DESIGN ADEQUACY AND SAFETY OF ERECTION BRACING, SHORING, TEMPORARY SUPPORTS, ETC., IS THE SOLE RESPONSIBILITY OF THE CONTRACTOR.

   DRAWINGS DO NOT SHOW ALL OPENINGS, COORDINATE WITH MECHANICAL DRAWINGS. VERIFY SIZES AND LOCATIONS OF ALL OPENINGS WITH MECHANICAL.

   REFER TO ARCHITECTURAL DRAWINGS FOR WATERPROOFING DETAILS.

   THE ENGINEER SHALL NOT HAVE THE AUTHORITY OR RESPONSIBILITY TO SUPERVISE OR DIRECT THE CONSTRUCTION WORK.

   ALL SECTIONS AND DETAILS, WHETHER EXPLICITLY CUT ON PLAN OR NOT, SHALL BE CONSIDERED TYPICAL AND SHALL APPLY AT SIMILAR CONDITIONS.

   INFORMATION REGARDING STRUCTURAL MEMBERS INDICATED TO BE EXISTING WAS OBTAINED DURING LIMITED FIELD OBSERVATIONS AND FROM LIMITED AVAILABLE EXISTING DRAWINGS. ACTUAL CONDITIONS MAY DIFFER FROM THAT WHICH IS INDICATED. IF THE CONTRACTOR UNCOVERS EXISTING CONDITIONS THAT DIFFER FROM THAT WHICH IS INDICATED ON PLAN, THE CONTRACTOR SHALL NOTIFY THE ARCHITECT AND STRUCTURAL ENGINEER OF RECORD OF THE DISCREPANCY IN ORDER THAT THE CONDITION MAY BE RESOLVED.

   FIELD VERIFY ALL EXISTING DIMENSIONS AND CONDITIONS PRIOR TO THE CONSTRUCTION AND FABRICATION OF ANY NEW STRUCTURAL MEMBERS. AT ALL LOCATIONS WHERE NEW ROOFS AND FLOORS ADJOIN EXISTING ROOFS AND FLOORS, EMPLOY A LICENSED SURVEYOR TO VERIFY EXISTING DIMENSIONS, FLOOR ELEVATIONS, AND FLOOR-TO-FLOOR HEIGHTS BEFORE ORDERING, DETAILING, FABRICATING, OR ERECTING ANY NEW STRUCTURAL MEMBERS.

   ADDITIONS AND ALTERATIONS TO THE EXISTING BUILDING DO NOT INCREASE THE DEMAND/CAPACITY RATIO OF ANY EXISTING STRUCTURAL LATERAL FORCE RESISTING ELEMENT BY MORE THAN 10%; THEREFORE, AN ENGINEERING EVALUATION AND ANALYSIS OF THE ALTERED EXISTING STRUCTURE IS NOT REQUIRED.

2. SPECIAL INSPECTIONS ARE REQUIRED BY THE VIRGINIA UNIFORM STATEWIDE BUILDING CODE (CHAPTER 17). REFER TO SECTION 014000 OF THE SPECIFICATIONS FOR THE GENERAL INSPECTION REQUIREMENTS. THE FOLLOWING IS A LIST OF ITEMS THAT REQUIRE SPECIAL INSPECTION. REFER TO THE REFERENCED SPECIFICATION SECTION FOR THE SPECIFIC REQUIREMENTS FOR EACH ITEM. THE INDEPENDENT INSPECTION AGENCY, ENGAGED BY THE OWNER, SHALL REVIEW THE TEST PROCEDURES AND INSPECTIONS WITH THE STRUCTURAL ENGINEER OF RECORD, THE GENERAL CONTRACTOR, AND THE OWNER PRIOR TO CONDUCTING TESTS AND INSPECTIONS.

A.	EARTHWORK	SECTION 312000
B.	CAST-IN-PLACE CONCRETE	SECTION 033000
C.	UNIT MASONRY	SECTION 042000
D.	STRUCTURAL STEEL FRAMING	SECTION 051200
E.	STEEL JOIST FRAMING	SECTION 052100
F.	STEEL DECKING	SECTION 053100
G.	COLD-FORMED METAL FRAMING	SECTION 054000
H.	METAL FABRICATIONS	SECTION 055000
I.	POST-INSTALLED ANCHORS	(SEE GENERAL NOTE)

3. SHOP DRAWINGS: THE CONTRACTOR SHALL COORDINATE THE ARCHITECTURAL, CIVIL, MECHANICAL, PLUMBING, AND ELECTRICAL REQUIREMENTS WITH THE STRUCTURAL DRAWINGS, INCLUDING THE LOCATION OF MISCELLANEOUS ITEMS AFFECTING THE STRUCTURAL WORK SUCH AS OPENINGS, BENT PLATES, INSERTS, ETC. PROMPTLY NOTIFY THE ARCHITECT OF ANY DISCREPANCIES OR OMISSIONS.

   THE CONTRACTOR SHALL VERIFY ALL FLOOR AND ROOF MOUNTED MECHANICAL EQUIPMENT DIMENSIONS AND WEIGHTS, AND VERIFY ALL ROOF OPENING SIZES AND LOCATIONS, WITH ARCHITECTURAL AND MECHANICAL DRAWINGS AND REVIEWED SHOP DRAWINGS.

   REFER TO PROJECT MANUAL FOR SUBMITTAL REQUIREMENTS. IN THE ABSENCE OF A PROJECT MANUAL, PROVIDE (1) ELECTRONIC PDF COPY OF ALL STRUCTURAL SUBMITTALS.

   SHOP DRAWINGS ARE TO BE REVIEWED BY THE CONTRACTOR AND SUBCONTRACTOR PRIOR TO BEING SUBMITTED FOR APPROVAL. SUBMITTED SHEETS SHALL CONTAIN THE CONTRACTOR'S SIGNED AND DATED REVIEW STAMP.

4. DESIGN LOADS AND PARAMETERS

   A. BUILDING RISK CATEGORY (TABLE 1604.5)

      CATEGORY II

   B. LIVE LOADS

ROOF	30 PSF
ROOF ABOVE MECH	(20 + 40 MECH) = 60 PSF TOTAL
STACK ROOMS	150 PSF
STORAGE	125 PSF
READING ROOMS	60 PSF
MECHANICAL	150 PSF

      LIVE LOAD REDUCTION (NOT USED)
      ROOF LIVE LOAD REDUCTION (NOT USED)

   C. SNOW LOADS

      Pg=30 PSF (GROUND SNOW)
      Ce=0.9 (SNOW EXPOSURE FACTOR)
      Ct=1.0 (THERMAL FACTOR)
      Is=1.0 (SNOW LOAD IMPORTANCE FACTOR: ASCE 7-10 TABLE 1.5-2)
      Pf (SNOW LOAD FOR LOW-SLOPE ROOF)=0.7X(Ce)X(Ct)X(Is)X(Pg)
            Pf=0.7X0.9X1.0X1.0X30 = 18.9 PSF
      TOTAL (LOW-SLOPE ROOF) = 18.9 PSF
      MINIMUM PF (LOW-SLOPE ROOF WHERE PG> 20.0 PSF) =
            Pm=(20)X(Is) = 20.0X1.0 = 20.0 PSF
      Ps=(Cs)X(Pf) (SLOPED ROOF SNOW LOAD)
            (1.0)X20.0 = 20.0 PSF
            USE 30 PSF MINIMUM

   D. WIND LOADS

      Vult=115 MPH (BUILDING RISK CATEGORY: II) (BASIC WIND SPEED: 3-SECOND GUST)
      Vasd = 89 MPH
      EXPOSURE B
      Kd=0.85 (WIND DIRECTIONALITY FACTOR)
      Kzt=1.0 (TOPOGRAPHIC FACTOR)
      Gcpi=±0.18 (ENCLOSED BUILDING)

      WIND LOAD DETERMINATION BY:
            ASCE 7-10, CHAPTERS 26 - 30 (DIRECTIONAL PROCEDURE)

      COMPONENTS AND CLADDING LOADS (STRENGTH LEVEL LOAD INDICATED IN TABLE THIS DRAWING):

COMPONENTS AND CLADDING WIND PRESSURE TABLES (ULTIMATE)
FOR BUILDINGS WITH MEAN ROOF HEIGHT H<60'

WALL PRESSURES (PSF) (FIGURE 30.4-1)

EFFECTIVE WIND AREA (SQ FT)	ZONES 4,5 (+)	ZONE 4 (-)	ZONE 5 (-)
10	+23.8	-25.8	-31.8
20	+22.7	-24.7	-29.7
50	+21.3	-23.3	-26.9
100	+20.2	-22.2	-24.7
200	+19.1	-21.1	-22.6
500	+17.7	-19.7	-19.7

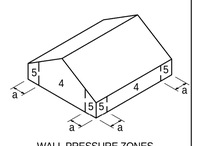

WALL PRESSURE ZONES

FLAT ROOF PRESSURES (PSF)
(FIGURE 30.4-2A) ROOF SLOPES < 7 DEGREES)

EFFECTIVE WIND AREA (SQ FT)	ZONES 1,2,3 (+)	ZONE 1 (-)	ZONE 2 (-)	ZONE 3 (-)
10	+16.0	-23.8	-39.9	-60.0
20	+16.0	-23.2	-35.6	-49.7
50	+16.0	-22.4	-30.0	-36.1
100 AND GREATER	+16.0	-21.8	-25.8	-25.8

ROOF OVERHANG PRESSURES (PSF)
(FIGURE 30.4-2A)

EFFECTIVE WIND AREA (SQ FT)	ZONES 1,2 (-)	ZONE 3 (-)
10	-34.2	-56.4
20	-33.6	-44.3
50	-32.8	-28.2
100	-32.2	-16.1
200	-28.0	-16.1
500	-22.2	-16.1

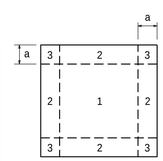

FLAT ROOF AND OVERHANG PRESSURE ZONES (PLAN VIEW)

PARAPET NET PRESSURES (PSF)
(FIGURE 30.9-1)

EFFECTIVE WIND AREA (SQ FT)	ZONE 4 (+)	ZONE 5 (+)	ZONE 4 (-)	ZONE 5 (-)
10	+56.4	+76.5	-42.3	-48.3
20	+51.1	+65.2	-40.2	-45.1
50	+44.1	+50.1	-37.3	-40.9
100	+38.7	+38.7	-35.2	-37.7
200	+37.7	+37.7	-33.0	-34.5
500	+36.2	+36.2	-30.2	-30.2

1. a = PRESSURE ZONE WIDTH = xx FT
2. PLUS SIGN (+) SIGNIFIES PRESSURE ACTING TOWARD THE SURFACE.
3. MINUS SIGN (-) SIGNIFIES PRESSURE ACTING AWAY FROM THE SURFACE.

   E. SEISMIC LOADS

      Ie=1.0 (ASCE 7-10 TABLE 1.5-2)
      SEISMIC SITE CLASS = D

      Ss=19.6%G Sms=(Fa)X(Ss)=(1.60)X(19.6) = 31.3%G
      S1=7.6%G Sm1=(Fv)X(S1)=(2.40)X(7.6) = 18.2%G
      Fa=1.60 Sds=(2/3)X(Sms) = 20.9%G
      Fv=2.40 Sd1=(2/3)X(Sm1) = 12.2%G

      SEISMIC DESIGN CATEGORY = B

      BASIC STRUCTURAL SYSTEM:
            STEEL SYSTEMS NOT SPECIFICALLY DETAILED FOR SEISMIC RESISTANCE

      SEISMIC FORCE-RESISTING SYSTEM:
            STEEL SYSTEMS NOT SPECIFICALLY DETAILED FOR SEISMIC RESISTANCE

            R=(RESPONSE MODIFICATION FACTOR) = 3.0
            Wo =(SYSTEM OVERSTRENGTH FACTOR) = 3.0
            Cd=(DEFLECTION AMPLIFICATION FACTOR) = 3.0
            (NO SPECIAL DETAILING REQUIRED PER AISC "SEISMIC PROVISIONS FOR STEEL BUILDINGS")

      BASIC STRUCTURAL SYSTEM:
            BEARING WALL SYSTEMS

      SEISMIC- FORCE- RESISTING SYSTEM:
            LIGHT-FRAME COLD-FORMED STEEL WALL SYSTEMS USING FLAT STRAP BRACING

            R= (RESPONSE MODIFICATION FACTOR) = 4.0
            Wo= (SYSTEM OVERSTRENGTH FACTOR) = 2.0
            Cd= (DEFLECTION AMPLIFICATION FACTOR) = 3.50

      ANALYSIS PROCEDURE = EQUIVALENT LATERAL FORCE METHOD
            Cs = 0.070
            SEISMIC BASE SHEAR (STRENGTH LEVEL LOAD) = 75.0 KIPS

      HORIZONTAL STRUCTURAL IRREGULARITIES THIS PROJECT (TABLE 12.3-1)
      TYPE 1a - TORSIONAL IRREGULARITY
      TYPE 1b - EXTREME TORSIONAL IRREGULARITY
      TYPE 2 - REENTRANT CORNER IRREGULARITY

      VERTICAL STRUCTURAL IRREGULARITIES THIS PROJECT (TABLE 12.3-2)
      NONE

   F. EARTH PRESSURES (EQUIVALENT FLUID PRESSURES)

AT REST (BRACED WALLS)	60 PCF
ACTIVE (CANTILEVERED WALLS)	45 PCF
PASSIVE	250 PCF
FRICTION COEFFICIENT FOR SLIDING	0.40

   G. CONCENTRATED LOADS (OVER 2.5'X2.5' AREA):

      300 POUNDS - ROOFS
      2000 POUNDS - OFFICES
      200 POUNDS - SCUTTLES, SKYLIGHT RIBS, AND CEILINGS WITH ACCESS

   H. RAIN LOADS
      i=3.25 in/hr (IBC 2012 FIGURE 1611.1)
      A=2,500 SF (WORST CASE AREA PER SECONDARY DRAIN)
      Q=0.0104 (A) (i) (FLOW RATE 7-10 EQ C8-1) = 0.0104 (2,500 SF)(3.25 in/hr) = 84.5 GAL/MIN
      dh=1.05" (ASCE 7-10, TABLE C8-1)
      ds=2" (DEPTH OF WATER UP TO SECONDARY DRAINAGE INLET)
      R=5.2(ds+dh) (IBC 2012 EQ 16-36. DESIGN RAIN LOAD)
        =5.2(2"+1.05")=15.86 PSF

5. FOUNDATIONS FOR THIS STRUCTURE ARE SPREAD FOOTINGS BEARING ON EITHER APPROVED RESIDUAL SOIL OR CONTROLLED STRUCTURAL FILL SUBGRADES WITH AN ASSUMED SOIL BEARING CAPACITY OF 2,500 PSF IN ACCORDANCE WITH THE OWNER'S GEOTECHNICAL ENGINEER'S REPORT BY FROEHLING & ROBERTSON, DATED 11/12/2015.

   THE OWNER'S GEOTECHNICAL ENGINEER SHALL VERIFY, PRIOR TO POURING CONCRETE, THAT THE SOIL IS CAPABLE OF SUPPORTING SUCH A LOAD AND IS CONSISTENT WITH THE GEOTECHNICAL REPORT.

   THE CONTRACTOR SHALL PROTECT THE FOOTINGS AND SLABS FROM DAMAGE FROM FROST HEAVE DURING CONSTRUCTION UNTIL THE FINAL DESIGN STRUCTURE IS COMPLETE.

   STEPS IN WALL FOOTINGS SHALL HAVE A MINIMUM SPACING OF DOUBLE THE CHANGE IN ELEVATION.

   AT NON-RETAINING WALLS BELOW GRADE, BACKFILL AGAINST BOTH SIDES OF WALL SIMULTANEOUSLY SO THAT GRADE DIFFERENCE IS NO MORE THAN 1'-0" AT ANY TIME.

   AT LOCATIONS WHERE THE BUILDING ELECTRICAL GROUND LOOP IS TIED TO FOUNDATION REINFORCING STEEL, CONTINUOUSLY TIE REINFORCING TOGETHER FOR MINIMUM DISTANCE REQD BY ELECTRICAL CODE AND BUILDING OFFICIAL.

   FOOTING EXCAVATIONS MAY REQUIRE ADDITIONAL UNDERCUT (AS INDICATED BY THE OWNER'S ON-SITE GEOTECHNICAL ENGINEER). BACKFILL EXCAVATION TO DESIGN SUBGRADE USING CLSM OR CONCRETE.

   UNDERCUT EXISTING SOILS AN AVERAGE OF THREE FEET IN DEPTH OVER ENTIRE AREA OF NEW CONSTRUCTION AND THREE FEET BEYOND. BACKFILL WITH CONTROLLED COMPACTED FILL.

6. ALL CONCRETE WORK SHALL CONFORM TO ALL REQUIREMENTS OF ACI 301-10 "SPECIFICATIONS FOR STRUCTURAL CONCRETE" AND ACI 318-11 "BUILDING CODE REQUIREMENTS FOR STRUCTURAL CONCRETE".

      f'c=3500 PSI (SLABS-ON-GRADE AND ELEVATED SLABS)
      f'c=3000 PSI (ALL OTHER CONCRETE)
      ASTM A615 GRADE 60 (TYPICAL REINFORCING STEEL)
      ASTM A706 (REINFORCING STEEL AT WELDED CONDITIONS)
      ASTM A1064 (PLAIN WELDED WIRE FABRIC - USE FLAT SHEETS ONLY)

   ALL EXTERIOR EXPOSED CONCRETE SHALL BE FURNISHED WITH AN AIR-ENTRAINING ADMIXTURE PROVIDING AN AIR-CONTENT OF 6% (+/- 1 1/2%) AT POINT OF PLACEMENT - REFER TO SPECIFICATIONS.

   REFER TO ARCHITECTURAL DRAWINGS FOR LOCATION AND EXTENT OF DEPRESSIONS FOR SPECIAL FLOOR COVERINGS.

   REFER TO SPECIFICATIONS FOR FINISHES.

7. RIGID POLYSTYRENE INSULATION BELOW CONCRETE SLABS:
   THIS PRODUCT IS USED AS A FORM BELOW THE NEW SLABS WHERE INDICATED ON PLAN AND IN SECTION AND WILL BE USED TO TRANSFER VERTICAL FORCES TO STRUCTURAL SLAB BELOW. PRODUCT SHALL BE MANUFACTURED TO MEET ASTM C578 TYPE IX WITH A DENSITY = 1.80 PCF AND A COMPRESSIVE RESISTANCE AT 10% DEFORMATION = 25.0 PSI. PRODUCT SHALL BE SECURED AS NECESSARY TO RESIST DISPLACEMENT DURING PLACEMENT OF CONCRETE SLAB ABOVE.

8. ALL MASONRY WORK SHALL CONFORM TO THE REQUIREMENTS OF (ACI 530-11/ASCE 5-11/TMS 402-11) "BUILDING CODE REQUIREMENTS FOR MASONRY STRUCTURES" AND (ACI 530.1-11/ASCE 6-11/TMS 602-11) "SPECIFICATION FOR MASONRY STRUCTURES".

      ASTM C90 (BLOCK)
      ASTM C270 (MORTAR) - TYPE S (CMU), TYPE N (BRICK)
      ASTM C476 (GROUT) - 2000 PSI MINIMUM COMPRESSIVE SRENGTH
      f'm=1500 PSI
      ASTM A615 GRADE 60 (REINFORCING)

   SOLIDLY FILL COLLAR JOINTS WITH MORTAR AS THE WORK PROGRESSES.

   PROVIDE STEEL SLEEVES AT PIPE PENETRATIONS (GALVANIZED AT EXTERIOR WALLS AND ALL BELOW GRADE WALLS).

   GROUT ALL CELLS OF FOUNDATION WALLS SOLID UP TO FINISH GROUND FLOOR.

   ALL BLOCK CONTAINING VERTICAL REINFORCING SHALL HAVE TWO CELLS PER 16" BLOCK. CELLS SHALL ALIGN VERTICALLY. BARS SHALL BE HELD IN PLACE BY REBAR POSITIONERS OR OTHER SUITABLE DEVICES.

   IN VERTICALLY REINFORCED WALLS, USE LADDER TYPE (NOT TRUSS TYPE) REINFORCING IN HORIZONTAL MORTAR JOINTS.

   GROUT SLUMP SHALL BE 8" TO 11". PLACE GROUT PER ACI 530.1 SECTION 3.5 AND CONSOLIDATE BY VIBRATION. RECONSOLIDATE BY VIBRATION AFTER INITIAL WATER LOSS AND SETTLEMENT.

9. ALL STRUCTURAL STEEL AND ARCHITECTURALLY EXPOSED STRUCTURAL STEEL WORK SHALL CONFORM TO THE REQUIREMENTS OF AISC 360-10 "SPECIFICATION FOR STRUCTURAL STEEL BUILDINGS". BOLTED CONNECTIONS SHALL BE TIGHTENED TO A SNUG TIGHT CONDITION UNLESS NOTED OTHERWISE ON PLAN. REFER TO DRAWINGS FOR CONNECTIONS. IF CONNECTIONS ARE NOT SHOWN, FABRICATOR SHALL DESIGN CONNECTIONS FOR BEAM UNIFORMLY LOADED TO CAPACITY.

ASTM A992 (W-SHAPES AND WT-SHAPES)	FY = 50 KSI
ASTM A500 GRADE C (SQUARE AND RECTANGULAR HSS SHAPES)	FY = 50 KSI
ASTM A500 GRADE C (ROUND HSS SHAPES)	FY = 46 KSI
ASTM A53, TYPE E OR S (PIPE)	FY = 35 KSI
ASTM A36 (ANGLE, CHANNELS, PLATES, AND OTHER STRUCTURAL SHAPES)	FY = 36 KSI

      E70XX (SMAW PROCESS WELDING)
      E6022 (METAL DECK TO OWSJ OR STRUCTURAL STEEL - SMAW PROCESS)
      E7XT-X (FCAW PROCESS WELDING)
      ASTM A325-N (BOLTS)
      ASTM F1852 (TENSION-CONTROL BOLTS, TWIST-OFF-TYPE, A325 EQUIVALENT)
      ASTM F2280 (TENSION-CONTROL BOLTS, TWIST-OFF-TYPE, A490 EQUIVALENT)
      ASTM A563 (HEAVY HEX NUT)
      ASTM F436 (HARDENED STEEL WASHER)

   DETAILING AND ERECTION OF STRUCTURAL STEEL AND OPEN WEB STEEL JOISTS SHALL COMPLY WITH CURRENT OSHA STANDARDS FOR THE CONSTRUCTION INDUSTRY-SUBPART R - STEEL ERECTION.

   CONTRACTOR SHALL PROVIDE FIELD CURED SAMPLES OF CAST-IN-PLACE CONCRETE IN FOOTINGS, PIERS, AND WALLS AND PRISMS OF MASONRY PIERS AND WALLS IN ACCORDANCE WITH OSHA SECTION 1926.752 TO DETERMINE THAT CONCRETE AND MASONRY HAVE ACHIEVED A MINIMUM OF 75% OF DESIGN STRENGTH PRIOR TO THE COMMENCEMENT OF STEEL ERECTION.

   ALL STEEL COLUMNS AND BEAMS WITHIN WOOD STUD OR STEEL STUD WALLS SHALL MEET CLOSER DIMENSIONAL TOLERANCES OF ARCHITECTURALLY EXPOSED STRUCTURAL STEEL (AESS) AS INDICATED IN THE AISC CODE OF STANDARD PRACTICE.

   WHERE SLIP-CRITICAL CONNECTIONS OR FULLY PRETENSIONED BOLTS ARE REQUIRED, USE TENSION CONTROL BOLTS (TWIST-OFF TYPE).

   FABRICATOR SHALL PROVIDE CHANNELS, ANGLES, ETC., AS REQUIRED FOR STEEL DECK BEARING AT LOCATIONS WHERE TOP OF STRUCTURAL MEMBERS ARE NOT AT DECK BEARING ELEVATION. REFER TO DETAILS.

   ALL STEEL MEMBERS AND CONNECTORS EXPOSED TO THE WEATHER SHALL BE HOT-DIP GALVANIZED.

   ALL FIELD WELDING TO EXISTING STRUCTURAL STEEL SHALL COMPLY WITH AISC AND AWS D1.1 FOR WELDING PROCEDURES TO EXISTING STEEL. EXISTING STEEL SHALL BE PROPERLY PRE-HEATED AND ALLOWED TO COOL DOWN BETWEEN PASSES TO LIMIT STEEL BEAM DISTORTION. ALL UNDERCUTS, NOTCHES, AND GOUGES SHALL BE FILLED AND GROUND OUT. ALL EXISTING STEEL SHALL BE CLEANED TO REMOVE ALL RUST, FIREPROOFING, PAINT OR CONTAMINANTS TO EXPOSE BARE METALS FOR A DISTANCE OF 2 INCHES FROM EACH SIDE OF WELD. EXISTING STEEL BEAMS SHALL BE TEMPORARILY SHORED AS REQUIRED DURING FIELD WELDING PROCESS.

ENTEROS DESIGN
314 EXCHANGE ALLEY
PETERSBURG, VA 23804
804.861.1200 P
804.861.1253 F

All ideas, designs, arrangements and plans indicated or represented by this drawing are property of ENTEROS DESIGN, PC; created, evolved and developed for the sole use of this project. These ideas, design arrangements and/or plans shall not be used by or disclosed to any person, firm or corporation for any purpose without written permission from ENTEROS DESIGN, PC. Written dimensions on these drawings shall have precedence over scaled dimensions. Contractors shall verify and be responsible for all dimensions and conditions on the job. The Architect must be notified of any variations from the dimensions and conditions shown on these drawings.
c 2015 ENTEROS DESIGN, PC

DMW PV Consulting Structural Engineers
DUNBAR MILBY WILLIAMS PITTMAN & VAUGHAN, PLLC
CONSULTING STRUCTURAL ENGINEERS
1025 BOULDERS PARKWAY, SUITE 310
RICHMOND, VIRGINIA 23225-5549
PHONE (804) 323-0656 FAX: (804) 272-3916
DMWPV JOB No. 1504-38

WILLIAMSON ROAD LIBRARY
3837 Williamson Road, Roanoke, VA 24012

CONSTRUCTION DOCUMENTS

REVISIONS:

GENERAL STRUCTURAL NOTES

PROJ. NO.:1504-38 DRAWN BY:LDS
4.13.16

COMMONWEALTH OF VIRGINIA
JEFFREY S. DAVIS
Lic. No. 026187
04/13/2016
PROFESSIONAL ENGINEER

S0.01

GENERAL STRUCTURAL NOTES CONTINUED

10. ALL OPEN WEB STEEL JOIST WORK SHALL CONFORM TO THE S.J.I. "STANDARD SPECIFICATIONS FOR OPEN WEB STEEL JOISTS". OPEN WEB STEEL JOISTS ARE NOT DESIGNED FOR CONCENTRATED LOADS EXCEPT AT PANEL POINTS. WHEN HANGING OR SETTING LOADS EXCEEDING 300 POUNDS, EITHER PLACE THE LOAD AT A PANEL POINT OR FIELD WELD (2) L1 1/4X1 1/4X1/8 ANGLES FROM THE POINT OF THE LOAD TO THE NEAREST PANEL POINT ON THE OPPOSITE CHORD. SUBMIT CALCULATIONS ON ALL SPECIAL DESIGN OPEN WEB STEEL JOISTS, (THIS INCLUDES ALL ROOF JOISTS) SEALED BY VIRGINIA PROFESSIONAL ENGINEER, FOR DMWPV REVIEW PRIOR TO FABRICATION.

    DESIGN JOISTS FOR 250 POUND CONCENTRATED SERVICE LOAD AT ALL DIAGONAL STRUTS FRAMING TO JOIST CHORDS, UNLESS NOTED OTHERWISE.

    PROVIDE JOIST BRIDGING IN ACCORDANCE WITH S.J.I. RECOMMENDATIONS, OSHA REQUIREMENTS, AND AS REQUIRED BY SPECIFIC JOIST DESIGN. ONLY THE EXPECTED DIAGONAL BRIDGING HAS BEEN INDICATED ON PLAN FOR COORDINATION PURPOSES.

    DETAILING AND ERECTION OF STRUCTURAL STEEL AND OPEN WEB STEEL JOISTS SHALL COMPLY WITH CURRENT OSHA STANDARDS FOR THE CONSTRUCTION INDUSTRY, SUBPART R - STEEL ERECTION.

    CONTRACTOR SHALL PROVIDE FIELD CURED SAMPLES OF CAST-IN-PLACE CONCRETE IN FOOTINGS, PIERS, AND WALLS AND PRISMS OF MASONRY PIERS AND WALLS IN ACCORDANCE WITH OSHA SECTION 1926.752 TO DETERMINE THAT CONCRETE AND MASONRY HAVE ACHIEVED A MINIMUM OF 75% OF DESIGN STRENGTH PRIOR TO THE COMMENCEMENT OF STEEL ERECTION.

11. ALL STRUCTURAL COLD-FORMED METAL FRAMING SHALL CONFORM TO THE S100-07 / S2-10 "NORTH AMERICAN SPECIFICATION FOR DESIGN OF COLD-FORMED STEEL STRUCTURAL MEMBERS, WITH SUPPLEMENT 2 DATED, 2010 - BY AMERICAN IRON AND STEEL INSTITUTE (AISI). ALL STUDS, JOISTS, AND ACCESSORIES SHALL BE GALVANIZED STEEL WITH THE TYPE, SIZE, GAUGE, AND SPACING INDICATED ON THE DRAWINGS. ALL MEMBERS WITHOUT A DESIGNATED SIZE ON THE DRAWINGS SHALL BE DESIGNED BY A LIGHT GAUGE STEEL SPECIALTY ENGINEER REGISTERED IN THE COMMONWEALTH OF VIRGINIA; PROVIDE CALCULATIONS AND SHOP DRAWINGS FOR DMWPV REVIEW ACCORDING TO SPECIFICATION SECTION 054000.

    DESIGN MINIMUM YIELD STRENGTHS ARE AS FOLLOWS:

    Fy=33 KSI FOR 54, 43 AND 33 MIL THICKNESS
    Fy=50 KSI FOR 97 AND 68 MIL THICKNESS

    PUNCH OUTS SHALL NOT BE LOCATED WITHIN 10" OF END OF MEMBER OR INSIDE FACE OF SUPPORT. PROVIDE BRIDGING IN ACCORDANCE WITH MANUFACTURER'S RECOMMENDATIONS - NOT TO EXCEED 5'-0" OC IN VERTICAL WALL STUDS.

    PAF USED TO CONNECT LIGHT GAGE STEEL MEMBERS OR CONNECTORS TO CONCRETE OR STRUCTURAL STEEL SHALL BE ONE OF THOSE INDICATED IN "POST INSTALLED ANCHOR" NOTE NO. 1B

    USE NO. 10 SCREWS (MINIMUM SIZE) IN ALL CONNECTIONS OF LIGHT GAUGE STEEL STRUCTURAL MEMBERS UNLESS NOTED OTHERWISE.

    CONNECTORS FOR COLD-FORMED FRAMING SHALL BE TYPE INDICATED IN SECTIONS AS MANUFACTURED BY THE STEEL NETWORK, INC. OR APPROVED EQUAL.

12. ALL POST-INSTALLED ANCHORS (IN CONCRETE OR CMU) ARE TO BE INSTALLED IN STRICT CONFORMANCE WITH THE MANUFACTURER'S RECOMMENDATIONS (INCLUDING BUT NOT LIMITED TO DRILL BIT SIZE, PROPER CLEANING OF HOLES, INSTALLATION TORQUE, AND TEMPERATURE CONSTRAINTS).

    WHEN A SPECIFIC PRODUCT AND MANUFACTURER IS REFERENCED IN THE CONTRACT DOCUMENTS, THAT SPECIFIC PRODUCT SHALL BE USED UNLESS AN ALTERNATE PRODUCT IS APPROVED IN WRITING BY THE STRUCTURAL ENGINEER OF RECORD PRIOR TO USE. CONTRACTOR SHALL PROVIDE LRFD OR CODE COMPLIANT CALCULATIONS DEMONSTRATING THAT THE SUBSTITUTED PRODUCT IS CAPABLE OF ACHIEVING THE PREFORMANCE VALUES OF THE SPECIFIED PRODUCT. SUBSTITUTIONS WILL BE EVALUATED BY THIER HAVING AN ICC - ES REPORT SHOWING COMPLIANCE WITH THE RELEVANT BUILDING CODE FOR SEISMIC USES, LOAD RESISTANCE, INSTALLATION CATEGORY, AND AVAILABILITY OF COMPREHENSIVE INSTALLATION INSTRUCTIONS. ADHESIVE ANCHOR EVALUATION WILL ALSO CONSIDER CREEP, IN-SERVICE TEMPERATURE AND INSTALLATION TEMPERATURE.

    THE ANCHOR MANUFACTURER'S REPRESENTATIVE SHALL BE PRESENT DURING THE INITIAL INSTALLATION OF EACH TYPE OF ANCHOR TO REVIEW AND APPROVE OF THE CONTRACTOR'S INSTALLATION PROCEDURES. THE OWNER'S TESTING AGENCY SHALL ALSO OBSERVE THE INITIAL INSTALLATION OF EACH ANCHOR TYPE, AND PROVIDE THE INSPECTION OF ANCHORS DURING INSTALLATION TO VERIFY CONFORMANCE WITH THE MANUFACTURER'S INSTALLATION RECOMMENDATIONS. SUBMIT REPORT FROM MANUFACTURER'S REPRESENTATIVE FOR DMWPV REVIEW. INSTALLATION OF ALL HORIZONTAL OR UPWARDLY INCLINED ADHESIVE ANCHORS SHALL BE PERFORMED BY PERSONNEL CERTIFIED BY ACI/CRSI ADHESIVE ANCHOR INSTALLER CERIFICATION PROGRAM OR APPROVED EQUIVALENT. SUBMIT CREDENTIALS OF CERTIFIED INSTALLERS. CONTINUOUS INSPECTION IS REQUIRED FOR ALL HORIZONTAL OR UPWARDLY INCLINED ADHESIVE ANCHORS. REMOVE AND REPLACE MISPLACED OR MALFUNCTIONING ANCHORS. FILL EMPTY ANCHOR HOLES AND PATCH FAILED ANCHOR LOCATIONS WITH HIGH-STRENGTH, NONMETALLIC GROUT.

    FASTENERS GENERICALLY REFERRED TO AS "SCREW ANCHOR" ON THE DRAWINGS SHALL BE ONE OF:

    1. TITEN HD BY SIMPSON STRONG-TIE ANCHOR SYSTEMS
    2. KWIK HUS-EZ BY HILTI

    FOR THESE SCREW ANCHORS LISTED, USE STANDARD ANSI DRILL BIT (NO SPECIAL BIT REQUIRED). PROVIDE HOLES IN STEEL MEMBERS 1/8" LARGER THAN NOMINAL DIAMETER OF ANCHOR. OTHER MANUFACTURER'S PRODUCTS MAY BE SUBMITTED AS A FORMAL REQUEST FOR SUBSTITUTION IF REQUIREMENTS ABOVE ARE MET. SIZES AND EMBEDMENTS OF SUBSTITUTE SCREW ANCHOR SHALL BE INCREASED AS NECESSARY TO ACHIEVE SHEAR AND TENSION VALUES PUBLISHED FOR LISTED ANCHOR. CONTRACTOR SHALL SUBMIT A COMPLETE SUBSTITUTION LIST FOR ALL ANCHOR SIZES AND SUBSTRATES. DUE TO HIGH VARIABILITY BETWEEN NOMINAL SIZES AND ACTUAL SIZES OF SCREW ANCHORS (AND HOLES REQD), THIS SUBSTITUTION REQUEST SHALL BE SUBMITTED PRIOR TO STEEL SHOP DRAWINGS. ANY PRODUCTS SUBMITTED AS A REQUEST FOR SUBSTITUTION IN CONCRETE SHALL BE COMPLAINT WITH ACI 318-11 APPENDIX D AND APPROVED FOR USE IN CRACKED CONCRETE. PROPOSED SUBSTITUTE PRODUCTS SHALL SHALL HAVE AN ICC-ES REPORT WHICH CONSIDERS EQUIVALENT EDGE AND SPACING REQUIREMENTS AS THE SPECIFIED PRODUCTS.

    CHEMICAL ADHESIVE ANCHORING SYSTEMS USED IN HOLLOW MASONRY GENERICALLY REFERRED TO AS ADHESIVE ANCHORING SYSTEMS SHALL BE ONE OF:

    1. HIT-HY 70 BY HILTI
    2. AT ACRYLIC-TIE ANCHORING SYSTEM BY SIMPSON

    USE SCREEN TUBES BY THE SAME MANUFACTURER WHEN USING THESE ADHESIVES IN MASONRY WITH VOIDS OR HOLLOW CMU. INSTALL USING DRILL IN ROTATION- ONLY MODE TO KEEP FROM DAMAGING INSIDE OF FACE SHELL.

    CHEMICAL ADHESIVE ANCHORING SYSTEMS USED IN SOLID OR GROUTED MASONRY GENERICALLY REFERRED TO AS ADHESIVE ANCHORING SYSTEMS SHALL BE ONE OF:

    1. SET HIGH STRENGTH EPOXY BY SIMPSON STRONG TIE ANCHOR SYSTEMS
    2. HIT-HY 70 BY HILTI

    CHEMICAL ADHESIVE ANCHORING SYSTEMS USED IN CONCRETE GENERICALLY REFERRED TO AS "ADHESIVE ANCHORS" SHALL BE ONE OF :

    1. SET-XP BY SIMPSON STRONG TIE
    2. AT-XP BY SIMPSON STRONG TIE
    3. HIT-RE 500-SD BY HILTI
    4. HIT-HY 200 BY HILTI (WITH STD ROD AND HOLE CLEANING)
    5. HIT-HY 200 BY HILTI (SAFE-SET SYSTEM)

    THREADED ROD ANCHORS USED WITH THESE SYSTEMS SHALL BE PROVIDED BY THE ADHESIVE MANUFACTURER AND HAVE A MINIMUM STEEL STRENGTH OF Fy = 36 KSI UNLESS NOTED OTHERWISE. REINFORCING STEEL USED WITH THESE SYSTEMS SHALL COMPLY WITH ASTM A615 GRADE 60. ANCHORS SHALL BE INSTALLED IN DRY CONCRETE A MINIMUM OF 21 DAYS OLD. USE ONLY A CARBIDE DRILL BIT (NO CORE DRILLING). HOLE CLEANING SHALL BE ACCOMPLISHED FOLLOWING MANUFACTURERS INSTRUCTIONS FOR INSTALLATION USING AIR COMPRESSOR WITH NOZZLE AND WIRE BRUSH PROVIDED BY ADHESIVE MANUFACTURER. HILTI HIT-HY 200 SAFE SET SYSTEM DOES HAVE AN OPTION WITHOUT HOLE CLEANING REQUIREMENT IF HILTI HIT-Z ANCHOR ROD IS USED. OVERHEAD HOLES AND ANY HOLES GREATER THAN 12 INCHES DEEP REQUIRE THE THE USE OF A PISTON PLUG AT THE END OF THE END OF ADHESIVE APPLICATOR. USE ADHESIVE RETAINING CAP IN OVERHEAD CONDITIONS.

    ANY PRODUCTS SUBMITTED AS A REQUEST FOR SUBSTITUTION SHALL BE COMPLIANT WITH ACI 318-11 APPENDIX D AND APPROVED FOR USE IN CRACKED CONCRETE.

    FASTENERS GENERICALLY REFERRED TO AS "EXPANSION ANCHORS" OR "WEDGE ANCHORS" SHALL BE ONE OF:

    1. KWIK BOLT TZ BY HILTI
    2. STRONG-BOLT 2 BY SIMPSON STRONG TIE ANCHOR SYSTEMS
    3. POWER- STUD + SD2 BY POWERS FASTENERS

    FASTENERS GENERICALLY REFERRED TO AS "CONCRETE/MASONRY SCREWS" SHALL BE ONE OF:

    1. KWIK-CON II + BY HILTI
    2. TITEN BY SIMPSON STRONG TIE ANCHOR SYSTEMS (DO NOT USE TITEN HD MINI)
    3. TAPPER + BY POWERS FASTENERS

    FASTERNERS GENERICALLY REFERRED TO AS "PAF" (POWDER ACTUATED FASTENERS) SHALL BE ONE OF :

    PAF INTO NORMAL OR LIGHT WEIGHT CONCRETE:

	ANCHOR	MANUF	SHANK DIAMETER	MIN EMBEDMENT
1.	X-U	HILTI	0.157"	1 1/4"
2.	8 mm HEAD SPIRAL CSI PINFASTENERS	POWERS	0.157"	1 1/4"
3.	SP SERIES	RAMSET	0.150"/0.180" TAPERED SHANK	1 1/4"
4.	PDPA	SIMPSON	0.157"	1 1/4"

    PAF INTO STRUCTURAL STEEL:

	ANCHOR	MANUF	SHANK DIAMETER
1.	X-U	HILTI	0.157"
2.	8 mm HEAD SPIRAL CSI PINFASTENERS	POWERS	0.157"
3.	SP	RAMSET	0.150"
4.	PDPA	SIMPSON	0.157"

    USE ONLY HILTI X-U PAF IN STRUCTURAL STEEL GREATER THAN 1/2" THICK. 1/2" MINIMUM POINT PENETRATION REQUIRED IN STRUCTURAL STEEL GREATER THAN 1/2" THICK.

13. *EXISTING CONSTRUCTION IS DENOTED USING SLANTED LETTERING, PHANTOM LINETYPE (DASH DOUBLE DOT), AND LIGHTER LINE WEIGHT.*

14. ABBREVIATIONS

AB = ANCHOR BOLT
AFF = ABOVE FINISHED FLOOR
APC = ARCHITECTURAL PRECAST CONCRETE
ARCH = ARCHITECTURAL
BLDG = BUILDING
BM = BEAM
BOT = BOTTOM
BRG = BEARING
CANT = CANTILEVER
CFS-S = COLD-FORMED STEEL- STRUCTURAL
CFS-NS= COLD-FORMED STEEL- NON STRUCTURAL
CIP = CAST-IN-PLACE
CJ = CONTROL JOINT
CL = CENTERLINE
CLG = CEILING
CLR = CLEAR
CLSM = CONTROLLED LOW-STRENGTH MATERIAL
CMU = CONCRETE MASONRY UNIT
COL = COLUMN
CONC = CONCRETE
CONN = CONNECTION
CONT = CONTINUOUS
COORD = COORDINATE
CSP = CONCRETE SURFACE PROFILE
DET = DETAIL
DIA = DIAMETER
DIAG = DIAGONAL
DIM = DIMENSION
DL = DEAD LOAD
DN = DOWN
DWGS = DRAWINGS
EA = EACH
EJ = EXPANSION JOINT
EL = ELEVATION
ELEV = ELEVATOR
EOS = EDGE OF SLAB
EQ = EQUAL
EQUIP = EQUIPMENT
EXIST = EXISTING
EW = EACH WAY
EXP = EXPANSION
EXT = EXTERIOR
FFE = FINISHED FLOOR ELEVATION
FLR = FLOOR
FLT = FLAT BAR
FRT = FIRE RETARDANT TREATED
FTG = FOOTING
GA = GAUGE
GALV = GALVANIZED
GC = GENERAL CONTRACTOR
GT = GIRDER TRUSS
HK = HOOK
HORIZ = HORIZONTAL
HS = HIGH STRENGTH
HT = HEIGHT
INT = INTERIOR
JBE = JOIST BEARING ELEVATION
JT = JOINT
LBS = POUNDS
LGST = LIGHT GAGE STEEL TRUSS
LL = LIVE LOAD
LLH = LONG LEG HORIZONTAL
LLV = LONG LEG VERTICAL
LSH = LONG SIDE HORIZONTAL
LSV = LONG SIDE VERTICAL
LVL = LAMINATED VENEER LUMBER
LW = LIGHT WEIGHT
MAS = MASONRY
MAX = MAXIMUM
MECH = MECHANICAL
MFR = MANUFACTURER
MISC = MISCELLANEOUS
MIN = MINIMUM
[NC] = NON-COMPOSITE
NO. = NUMBER
NIC = NOT IN CONTRACT
NTS = NOT TO SCALE
NW = NORMAL WEIGHT
OC = ON CENTER
OPP = OPPOSITE
OH = OPPOSITE HAND
OWSJ = OPEN WEB STEEL JOIST
PAF = POWDER ACTUATED FASTENER
PL = PLATE
PLF = POUNDS PER LINEAR FOOT
POJ = PLANE OF JOIST
PSF = POUNDS PER SQUARE FOOT
PSI = POUNDS PER SQUARE INCH
REF = REFERENCE
REINF = REINFORCING
REQD = REQUIRED
SECT = SECTION
SIM = SIMILAR
SOG = SLAB-ON-GRADE
SPA = SPACE
STD = STANDARD
STIFF = STIFFENER
TBE = TRUSS BEARING ELEVATION
T&B = TOP AND BOTTOM
T&G = TONGUE AND GROOVE
TOB = TOP OF BEAM
TOC = TOP OF CONCRETE
TOS = TOP OF STEEL
TYP = TYPICAL
UNO = UNLESS NOTED OTHERWISE
VERT = VERTICAL
WCJ = WALL CONTROL JOINT
WT = WEIGHT
WWF = WELDED WIRE FABRIC
(H) = HIGH
(L) = LOW

ENTEROS DESIGN

314 EXCHANGE ALLEY
PETERSBURG, VA 23804

804.861.1200 P
804.861.1253 F

All ideas, designs, arrangements and plans indicated or represented by this drawing are property of ENTEROS DESIGN, PC; created, evolved and developed for the sole use of this project. These ideas, design arrangements and/or plans shall not be used by or disclosed to any person, firm or corporation for any purpose without written permission from ENTEROS DESIGN, PC. Written dimensions on these drawings shall have precedence over scaled dimensions. Contractors shall verify and be responsible for all dimensions and conditions on the job. The Architect must be notified of any variations from the dimensions and conditions shown on these drawings.
c 2015 ENTEROS DESIGN, PC

DMW PV
Consulting Structural Engineers

DUNBAR MILBY WILLIAMS PITTMAN & VAUGHAN, PLLC
CONSULTING STRUCTURAL ENGINEERS
1025 BOULDERS PARKWAY, SUITE 310
RICHMOND, VIRGINIA 23225-5549
PHONE (804) 323-0656 FAX: (804) 272-3916
DMWPV JOB No. 1504-38

WILLIAMSON ROAD LIBRARY

3837 Williamson Road, Roanoke, VA 24012

CONSTRUCTION DOCUMENTS

REVISIONS:

GENERAL STRUCTURAL NOTES

PROJ. NO.:1504-38 DRAWN BY:LDS
4.13.16

COMMONWEALTH OF VIRGINIA
JEFFREY S. DAVIS
Lic. No. 026187
04/13/2016
PROFESSIONAL ENGINEER

S0.02

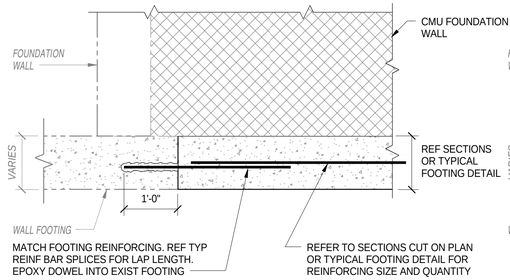

TYPICAL FOOTING DETAIL AT EXISTING FOUNDATION

(TOP OF FOOTING AT THE SAME ELEVATION AS EXISTING FOOTING)

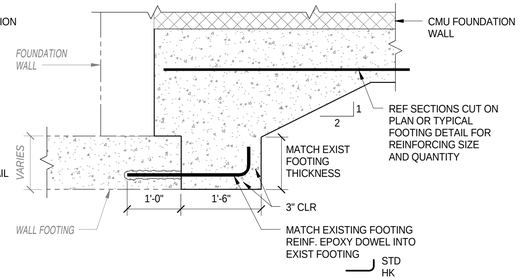

TYPICAL FOOTING DETAIL AT EXISTING FOUNDATION

(TOP OF FOOTING ABOVE EXISTING FOOTING ELEVATION)

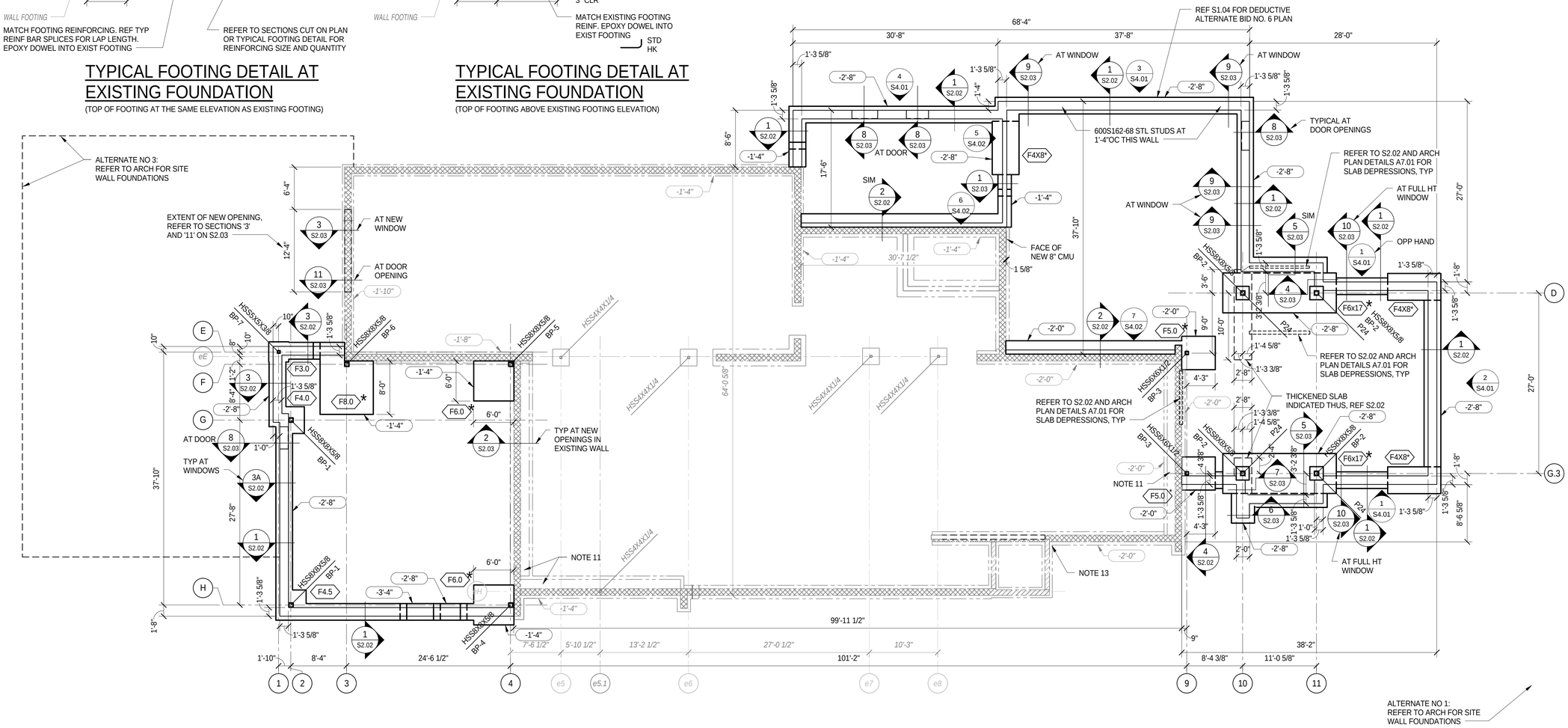

N

FOUNDATION PLAN

1/8"=1'-0"

1. TYPICAL SLAB-ON-GRADE SHALL BE 4" NORMAL WEIGHT CONCRETE WITH 6X6-W1.4XW1.4 WWF AT MID-DEPTH, OVER VAPOR BARRIER/RETARDER (REF ARCH DWGS), OVER 4" POROUS FILL.
2. REFER TO DRAWING S2.01 AND S2.02 FOR TYPICAL FOUNDATION DETAILS.
3. TOP OF FOOTING ELEVATIONS INDICATED THUS (-X'-XX) RELATIVE TO TYPICAL FINISHED FIRST FLOOR ELEVATION 1059.67'.
4. TOP OF SLAB ELEVATION INDICATED THUS -X'-XX" RELATIVE TO TYPICAL FINISHED FIRST FLOOR ELEVATION 1059.67'. COORDINATE ACTUAL SLAB DEPRESSION WITH FLOOR FINISH MANUFACTURER OR EQUIPMENT PROVIDED.
5. FOOTING EXCAVATIONS MAY REQUIRE ADDITIONAL UNDERCUT (AS INDICATED BY THE OWNER'S ON-SITE GEOTECHNICAL ENGINEER). BACKFILL EXCAVATION TO DESIGN SUBGRADE USING CLSM OR CONCRETE.
6. GROUT ALL CMU SOLID BELOW GRADE.
7. ALL STEEL COLUMNS AND BEAMS WITHIN STEEL STUD WALLS SHALIMEET CLOSER DIMENSIONAL TOLERANCES OF CATAGORY ARCHITECTURALLY EXPOSED STRUCTURAL STEEL (AESS) AS INDICATED IN THE AISC CODE OF STANDARD PRACTICE.
8. P20 = 20"X20" CAST-IN-PLACE CONCRETE PIER.
   P24 = 24"X24" CAST-IN-PLACE CONCRETE PIER.
   REFER TO S2.01 FOR "TYPICAL CONCRETE PIER" DETAIL.
   TOP OF PIER ELEVATION SHALL BE (-0'-8") RELATIVE TO TYPICAL ADJACENT FINISH FLOOR UNO.
9. REFER TO S4.01 FOR STEEL STUD STRAP BRACING DETAILS.
10. FIELD VERIFY ALL EXISTING DIMENSIONS AND CONDITIONS PRIOR TO THE CONSTRUCTION AND FABRICATION OF ANY NEW STRUCTURAL MEMBERS.
11. FILL EXISTING HVAC TRENCHES WITH CLSM.
12. UNDERCUT EXISTING SOILS AN AVERAGE OF THREE FEET IN DEPTH OVER ENTIRE AREA OF NEW CONSTRUCTION AND THREE FEET BEYOND. BACKFILL WITH CONTROLLED COMPACTED FILL.
13. MAKE HOLE IN THE EXISTING FOUNDATION WALL AS SMALL AS POSSIBLE. PROVIDE STEEL SLEEVE AROUND PIPE. GROUT HOLE IN FOUNDATIOWALL TIGHT AROUND PIPE SLEEVE WITH NON-SHRINK GROUT. ONFOUNDATION WALL REPAIR GROUT SETS, FILL EXCAVATION BELOVEXISTING SLAB WITH FLOWABLE FILL. REF "TYPICAL SLAB-ON-GRADE REPAIR DETAIL" ON 2.02 FOR SLAB REPAIR.
14. REF S2.01 FOR COLUMN FOOTING SCHEDULE AND COLUMN BASE PLATE SCHEDULE.

ENTEROS DESIGN

314 EXCHANGE ALLEY
PETERSBURG, VA 23804

804.861.1200 P
804.861.1253 F

All ideas, designs, arrangements and plans indicated or represented by this drawing are property of ENTEROS DESIGN, PC; created, evolved and developed for the sole use of this project. These ideas, design arrangements and/or plans shall not be used by or disclosed to any person, firm or corporation for any purpose without written permission from ENTEROS DESIGN, PC. Written dimensions on these drawings shall have precedence over scaled dimensions. Contractors shall verify and be responsible for all dimensions and conditions on the job. The Architect must be notified of any variations from the dimensions and conditions shown on these drawings.
c 2015 ENTEROS DESIGN, PC

DMWPV Consulting Structural Engineers

DUNBAR MILBY WILLIAMS PITTMAN & VAUGHAN, PLLC
CONSULTING STRUCTURAL ENGINEERS
1025 BOULDERS PARKWAY, SUITE 310
RICHMOND, VIRGINIA 23225-5549
PHONE (804) 323-0656 FAX: (804) 272-3916
DMWPV JOB No. 1504-38

WILLIAMSON ROAD LIBRARY

3837 Williamson Road, Roanoke, VA 24012

CONSTRUCTION DOCUMENTS

REVISIONS:

FOUNDATION PLAN

PROJ. NO.:1504-38 DRAWN BY:LDS
4.13.16

COMMONWEALTH OF VIRGINIA
JEFFREY S. DAVIS
Lic. No. 026187
04/13/2016
PROFESSIONAL ENGINEER

S1.01

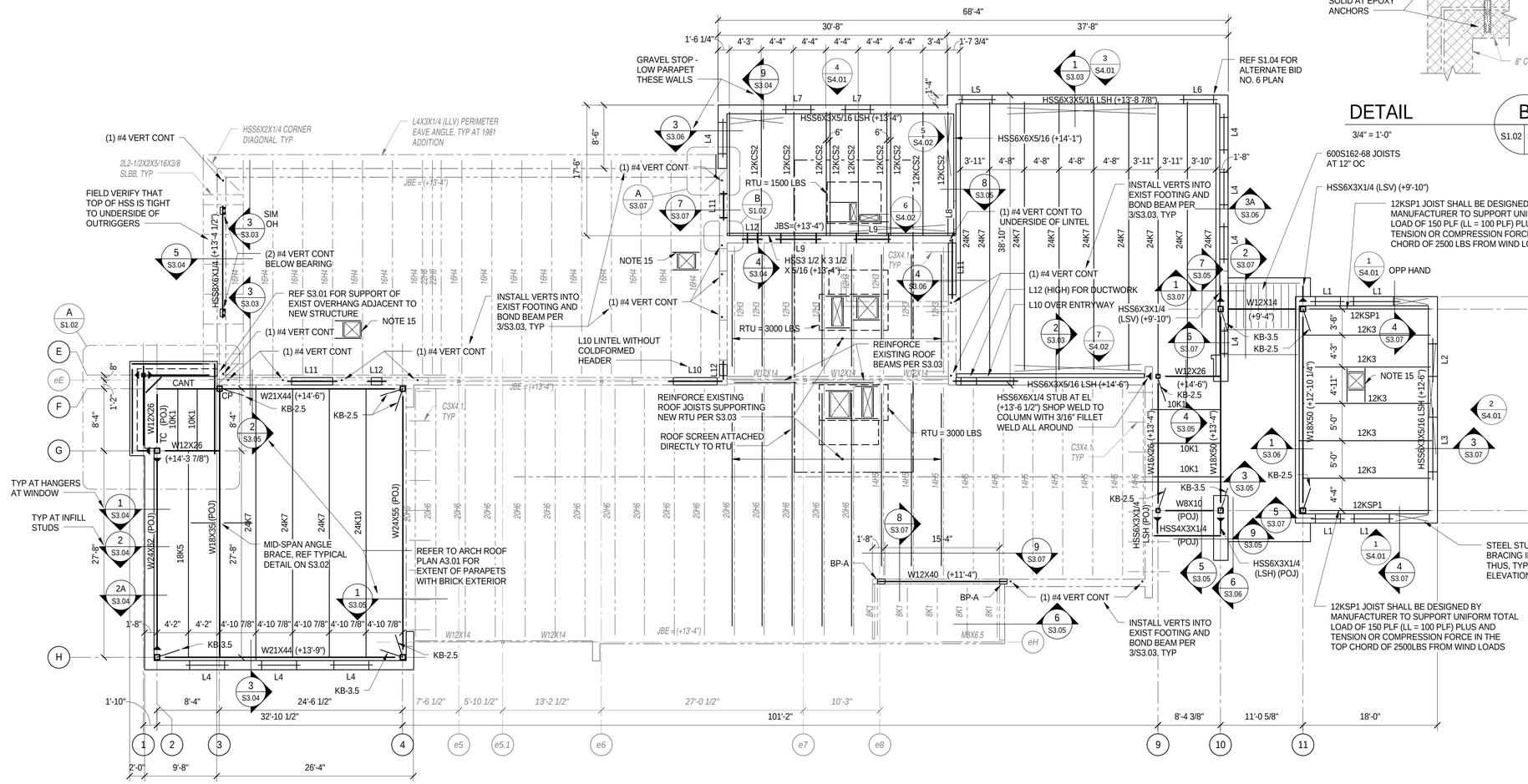

DETAIL B

3/4" = 1'-0"

S1.02 | S1.02

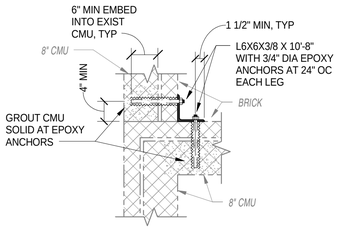

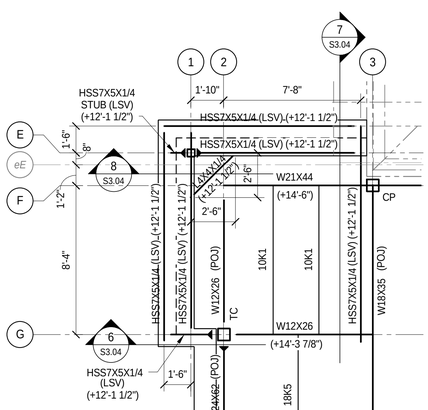

DETAIL A

1/4" = 1'-0"

S1.02 | S1.02

MAIN ROOF FRAMING PLAN

N

1/8"=1'-0"

1. TOP OF ALL STEEL ROOF GIRDERS INDICATED THUS (+XX'-X") RELATIVE TO FINISH FIRST FLOOR.
2. POJ DENOTES TOP OF BEAM IS IN SAME PLANE AS TOP OF OPEN WEB STEEL JOIST. K-SERIES ROOF JOIST SEAT DEPTH SHALL BE 2 1/2 UNLESS NOTED OTHERWISE.
3. PROVIDE 1 1/2", 22 GAGE, GALVANIZED STEEL ROOF DECK (TYPE B). CONNECT TO ROOF FRAMING MEMBERS AS INDICATED ON S3.01.
4. REFERENCE DRAWING S3.01 FOR TYPICAL ROOF CONSTRUCTION DETAILS.
5. ALL OWSJ ON THIS ROOF PLAN ARE SPECIAL DESIGN JOISTS. REFERENCE DRAWING S3.01 FOR NET UPLIFT LOADS.
6. KCS INDICATES CONSTANT SHEAR CAPACITY OPEN WEB STEEL JOIST.
7. W8X10 (S) INDICATES BEAM SLOPES UNIFORMLY BETWEEN SUPPORTING MEMBERS.
8. FIELD WELDED FULL MOMENT CONNECTION INDICATED THUS ◀.
   SHOP WELDED FULL MOMENT CONNECTION INDICATED THUS ◁.
9. REFER TO ARCHITECTURAL DRAWINGS AND MECHANICAL DRAWINGS FOR DIMENSIONS FOR MECHANICAL AND OTHER PENETRATIONS THROUGH ROOF AND/OR CEILING.
10. 'DA' INDICATES BEAM CONNECTS TO HSS COLUMN OR W-SHAPE GIRDER WITH DOUBLE ANGLE CONNECTION.
    'CP' INDICATES BEAM BEARS ON TOP OF COLUMN CAP PLATE.
    USE SINGLE SHEAR TAB CONNECTION TO HSS COLUMN UNLESS NOTED OTHERWISE.
    USE DOUBLE ANGLE CONNECTION TO W-SHAPE COLUMN UNLESS NOTED OTHERWISE.
11. 'TP' INDICATES 3/8" THRU-PLATE CONNECTION WITH STD ROUND HOLES FOR BOLTS.
    'TC' INDICATES 1/2" SHEAR TAB WELDED TO FACE OF COLUMN WITH TENSION-CONTROL BOLTS.
12. SPACE JOISTS OR BEAMS EQUALLY BETWEEN COLUMNS UNLESS NOTED OTHERWISE.
13. REFER TO S5.01 FOR LINTEL SCHEDULE AND FOR CONNECTION DETAILS AT MULTI-PLY STUD POSTS AND MULTI-PLY HEADERS/LINTELS.
14. REFER TO S4.01 AND S4.02 FOR STEEL STUD STRAP BRACING DETAILS.
15. PROVIDE STEEL ANGLE FRAMES AT ALL ROOF OPENINGS. THIS INCLUDES THOSE FOR ROOF DRAINS AND ROOF OVERFLOW DRAINS NOT SHOWN ON THIS PLAN. REFER TO ARCHITECTURAL ROOF PLAN FOR LOCATIONS. REFER TO S3.02 FOR TYPICAL DETAIL OF FRAME.
16. FIELD VERIFY ALL EXISTING DIMENSIONS AND CONDITIONS PRIOR TO THE CONSTRUCTION AND FABRICATION OF ANY NEW STRUCTURAL MEMBERS.
17. 'KB' INDICATES KNEE BRACE, THE NUMBER FOLLOWING 'KB' INDICATES THE RISE AND RUN DIMENSION OF THE KNEE BRACE IN ACCORDANCE WITH ITS CENTERLINE AND THAT OF THE BEAM AND COLUMN THAT IT FRAMES INTO. REF "KNEE BRACE CONNECTION DETAILS" ON S3.01 FOR CONNECTION DETAILS.
18. AT SMALL EXISTING ROOF PENETRATIONS BEING DEMOLISHED (10" OR LESS), PROVIDE 20" X 20", 14 GA PLATE OVER THE HOLE AND SCREW EACH EDGE AT 6" OC. FOR LARGER ABANDONED PENETRATIONS, PROVIDE SHEETS OF OF 1 1/2", 22 GA GALV ROOF DECK (MATCH EXISTING PROFILE) THAT SPAN BETWEEN TWO JOISTS AND NEST OVER TOP OF EXISTING DECK. ATTACH NEW DECK TO JOISTS WITH PAF, NO. 12 SCREWS, OR 5/8" PUDDLE WELDS AT 6" OC. REF A0.02 FOR ROOF DEMOLITION PLAN.

ENTEROS DESIGN

314 EXCHANGE ALLEY
PETERSBURG, VA 23804

804.861.1200 P
804.861.1253 F

All ideas, designs, arrangements and plans indicated or represented by this drawing are property of ENTEROS DESIGN, PC; created, evolved and developed for the sole use of this project. These ideas, design arrangements and/or plans shall not be used by or disclosed to any person, firm or corporation for any purpose without written permission from ENTEROS DESIGN, PC. Written dimensions on these drawings shall have precedence over scaled dimensions. Contractors shall verify and be responsible for all dimensions and conditions on the job. The Architect must be notified of any variations from the dimensions and conditions shown on these drawings.
c 2015 ENTEROS DESIGN, PC

DMWPV Consulting Structural Engineers

DUNBAR MILBY WILLIAMS PITTMAN & VAUGHAN, PLLC
CONSULTING STRUCTURAL ENGINEERS
1025 BOULDERS PARKWAY, SUITE 310
RICHMOND, VIRGINIA 23225-5549
PHONE (804) 323-0656 FAX: (804) 272-3916
DMWPV JOB No. 1504-38

WILLIAMSON ROAD LIBRARY

3837 Williamson Road, Roanoke, VA 24012

CONSTRUCTION DOCUMENTS

REVISIONS:

MAIN ROOF FRAMING PLAN

PROJ. NO.:1504-38 DRAWN BY:LDS
4.13.16

COMMONWEALTH OF VIRGINIA
JEFFREY S. DAVIS
Lic. No. 026187
04/13/2016
PROFESSIONAL ENGINEER

S1.02

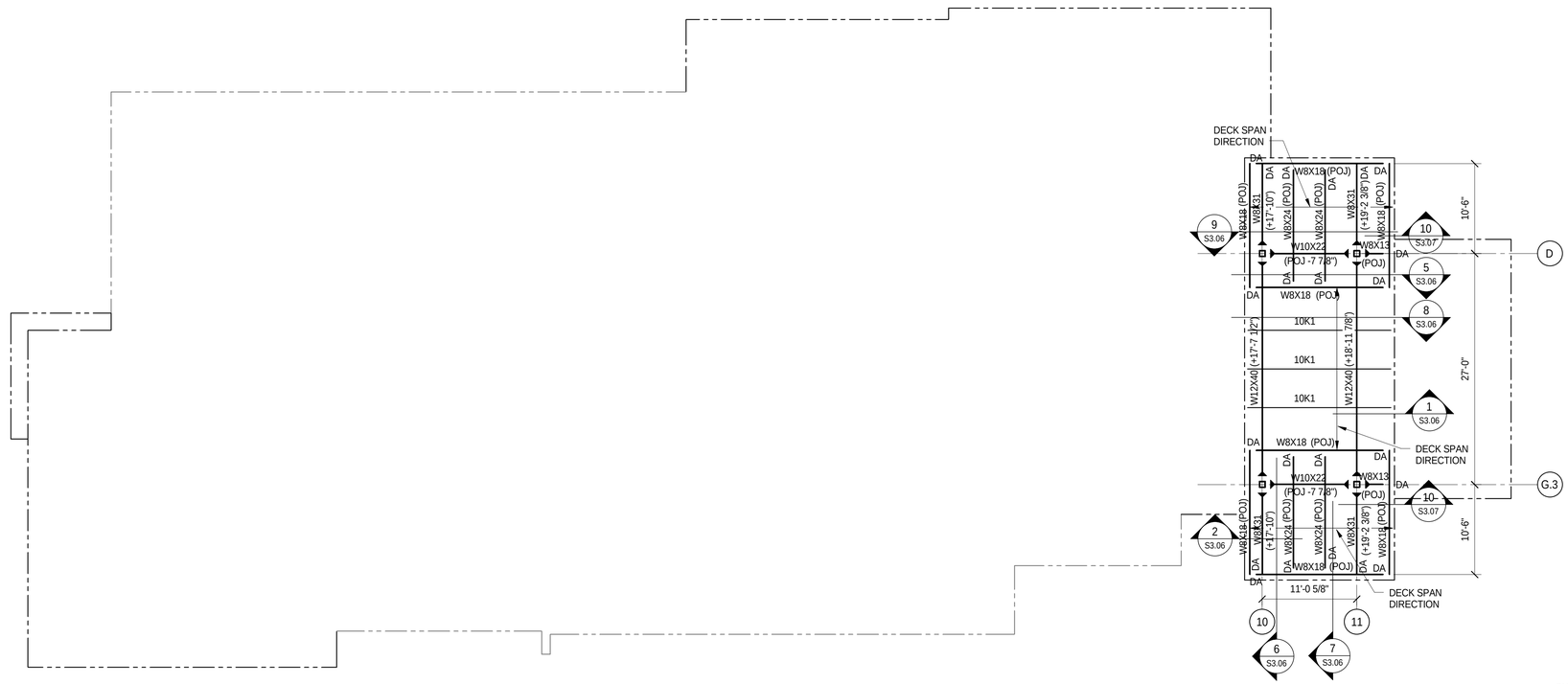

N

CANOPY ROOF FRAMING PLAN

1/8"=1'-0"

1. TOP OF ALL STEEL ROOF GIRDERS INDICATED THUS (+XX'-X") RELATIVE TO FINISH FIRST FLOOR.
2. POJ DENOTES TOP OF BEAM IS IN SAME PLANE AS TOP OF OPEN WEB STEEL JOIST. K-SERIES ROOF JOIST SEAT DEPTH SHALL BE 2 1/2 UNLESS NOTED OTHERWISE.
3. PROVIDE 1 1/2", 22 GAGE, GALVANIZED STEEL ROOF DECK (TYPE B). CONNECT TO ROOF FRAMING MEMBERS AS INDICATED ON S3.01.
4. REFERENCE DRAWING S3.01 FOR TYPICAL ROOF CONSTRUCTION DETAILS.
5. W8X10 (S) INDICATES BEAM SLOPES UNIFORMLY BETWEEN SUPPORTING MEMBERS.
6. FIELD WELDED FULL MOMENT CONNECTION INDICATED THUS ◀
   SHOP WELDED FULL MOMENT CONNECTION INDICATED THUS ◁
7. REFER TO ARCHITECTURAL DRAWINGS AND MECHANICAL DRAWINGS FOR DIMENSIONS FOR MECHANICAL AND OTHER PENETRATIONS THROUGH ROOF AND/OR CEILING.
8. 'DA' INDICATES BEAM CONNECTS TO HSS COLUMN OR W-SHAPE GIRDER WITH DOUBLE ANGLE CONNECTION.
   'CP' INDICATES BEAM BEARS ON TOP OF COLUMN CAP PLATE.
   USE SINGLE SHEAR TAB CONNECTION TO HSS COLUMN UNLESS NOTED OTHERWISE.
   USE DOUBLE ANGLE CONNECTION TO W-SHAPE COLUMN UNLESS NOTED OTHERWISE.
9. 'TP' INDICATES 3/8" THRU-PLATE CONNECTION WITH STD ROUND HOLES FOR BOLTS.
10. SPACE JOISTS OR BEAMS EQUALLY BETWEEN COLUMNS UNLESS NOTED OTHERWISE.
11. REFER TO S5.01 FOR LINTEL SCHEDULE AND FOR CONNECTION DETAILS AT MULTI-PLY STUD POSTS AND MULTI-PLY HEADERS/LINTELS.
12. REFER TO S4.01 FOR STEEL STUD STRAP BRACING DETAILS.
13. PROVIDE STEEL ANGLE FRAMES AT ALL OPENINGS FOR ROOF DRAINS AND ROOF OVERFLOW DRAINS. REFER TO ARCHITECTURAL ROOF PLAN FOR LOCATIONS. REFER TO S3.01 FOR TYPICAL DETAIL OF FRAME.
14. FIELD VERIFY ALL EXISTING DIMENSIONS AND CONDITIONS PRIOR TO THE CONSTRUCTION AND FABRICATION OF ANY NEW STRUCTURAL MEMBERS.

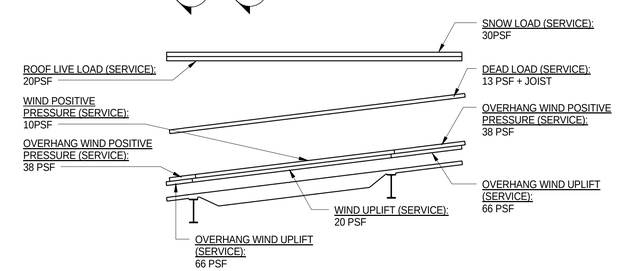

10K1-SP SPECIAL DESIGN JOIST LOADING DIAGRAM - AT CANOPY

NTS

NOTES:

1. LIMIT JOIST DEFLECTION FOR PORTION BETWEEN SUPPORTS TO L/360 FOR LL AND L/240 TOTAL.
2. LIMIT DEFLECTION OF JOIST EXTENTIONS TO 0.25 INCH.
3. WIND LOADS ARE SERVICE LEVEL LOADS. DO NOT REDUCE IN LOAD COMBINATIONS

ENTEROS DESIGN

314 EXCHANGE ALLEY
PETERSBURG, VA 23804

804.861.1200 P
804.861.1253 F

All ideas, designs, arrangements and plans indicated or represented by this drawing are property of ENTEROS DESIGN, PC; created, evolved and developed for the sole use of this project. These ideas, design arrangements and/or plans shall not be used by or disclosed to any person, firm or corporation for any purpose without written permission from ENTEROS DESIGN, PC. Written dimensions on these drawings shall have precedence over scaled dimensions. Contractors shall verify and be responsible for all dimensions and conditions on the job. The Architect must be notified of any variations from the dimensions and conditions shown on these drawings.
c 2015 ENTEROS DESIGN, PC

DMWPV Consulting Structural Engineers

DUNBAR MILBY WILLIAMS PITTMAN & VAUGHAN, PLLC
CONSULTING STRUCTURAL ENGINEERS
1025 BOULDERS PARKWAY, SUITE 310
RICHMOND, VIRGINIA 23225-5549
PHONE (804) 323-0656 FAX: (804) 272-3916
DMWPV JOB No. 1504-38

WILLIAMSON ROAD LIBRARY

3837 Williamson Road, Roanoke, VA 24012

CONSTRUCTION DOCUMENTS

REVISIONS:

CANOPY ROOF FRAMING PLAN

PROJ. NO.:1504-38 DRAWN BY:LDS
4.13.16

COMMONWEALTH OF VIRGINIA
JEFFREY S. DAVIS
Lic. No. 026187
04/13/2016
PROFESSIONAL ENGINEER

S1.03

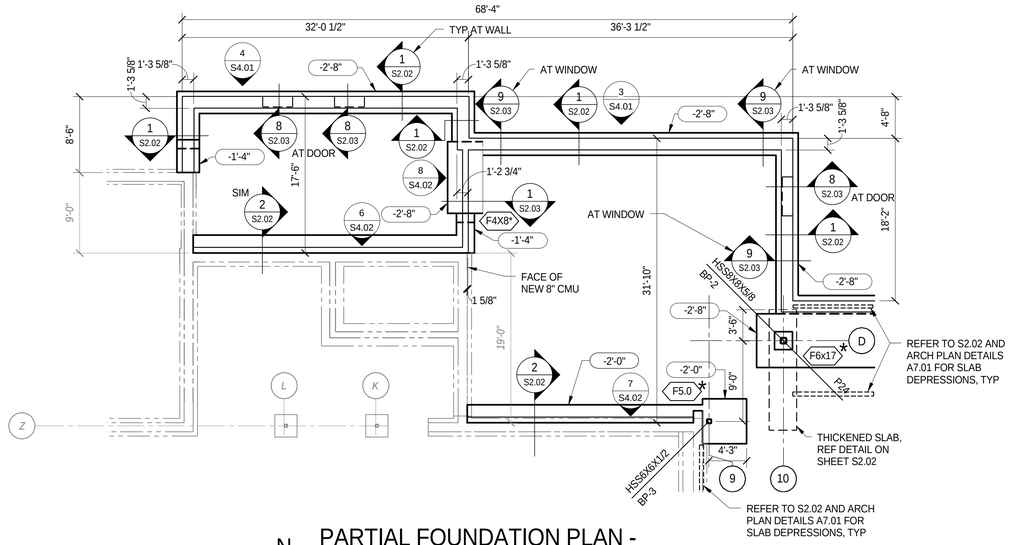

N

PARTIAL FOUNDATION PLAN - ALTERNATE BID No. 6

1/8"=1'-0"

REF S1.01 FOR PLAN NOTES AND ALL OTHER DETAILS.

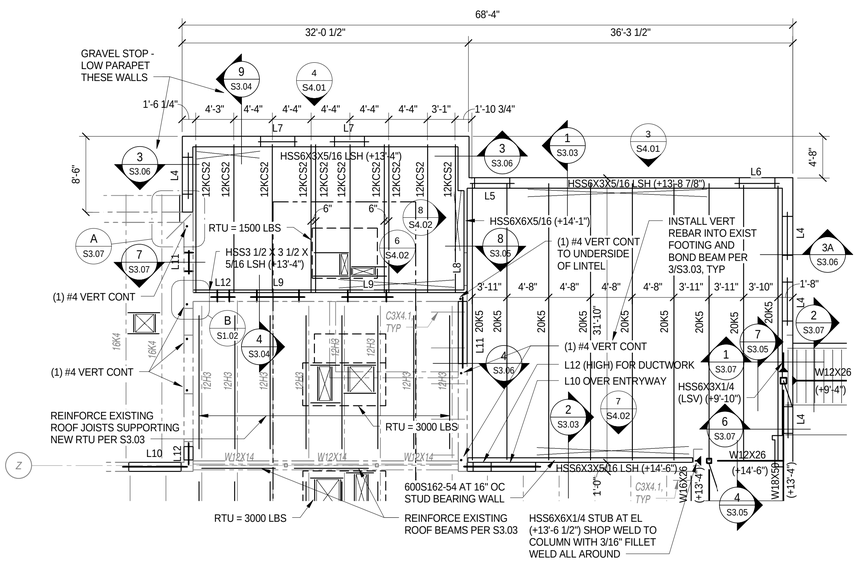

N

PARTIAL MAIN ROOF FRAMING PLAN - ALTERNATE BID No. 6

1/8"=1'-0"

REF S1.02 FOR PLAN NOTES AND ALL OTHER DETAILS.

ENTEROS DESIGN

314 EXCHANGE ALLEY
PETERSBURG, VA 23804

804.861.1200 P
804.861.1253 F

All ideas, designs, arrangements and plans indicated or represented by this drawing are property of ENTEROS DESIGN, PC; created, evolved and developed for the sole use of this project. These ideas, design arrangements and/or plans shall not be used by or disclosed to any person, firm or corporation for any purpose without written permission from ENTEROS DESIGN, PC. Written dimensions on these drawings shall have precedence over scaled dimensions. Contractors shall verify and be responsible for all dimensions and conditions on the job. The Architect must be notified of any variations from the dimensions and conditions shown on these drawings.
c 2015 ENTEROS DESIGN, PC

DMWPV Consulting Structural Engineers

DUNBAR MILBY WILLIAMS PITTMAN & VAUGHAN, PLLC
CONSULTING STRUCTURAL ENGINEERS
1025 BOULDERS PARKWAY, SUITE 310
RICHMOND, VIRGINIA 23225-5549
PHONE (804) 323-0656 FAX: (804) 272-3916
DMWPV JOB No. 1504-38

WILLIAMSON ROAD LIBRARY

3837 Williamson Road, Roanoke, VA 24012

CONSTRUCTION DOCUMENTS

REVISIONS:

PARTIAL FDN AND FRAMING PLANS - ALT No. 6

PROJ. NO.:1504-38 DRAWN BY:RKH
4.13.16

COMMONWEALTH OF VIRGINIA
JEFFREY S. DAVIS
Lic. No. 026187
04/13/2016
PROFESSIONAL ENGINEER

S1.04

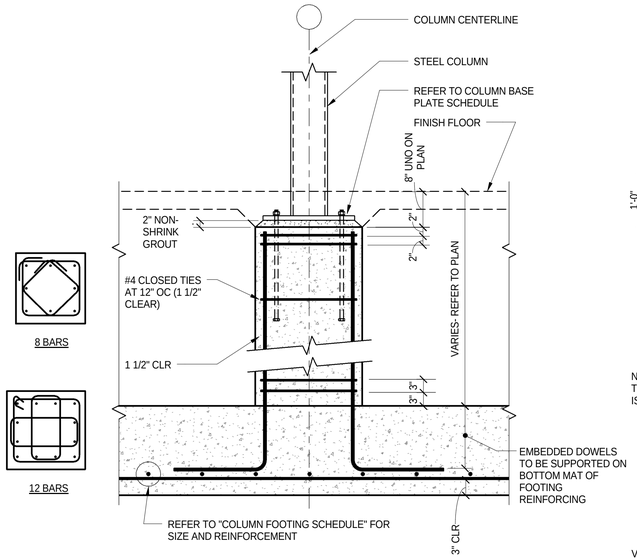

TYPICAL CONCRETE PIER

3/4"=1'-0"

CONCRETE PIER SCHEDULE

MARK	SIZE	VERT REINF	TIES
P20	20"X20"	(8) #7 DOWELS	#4 AT 12" OC
P24	24"X24"	(8) #8 DOWELS	#4 AT 12" OC

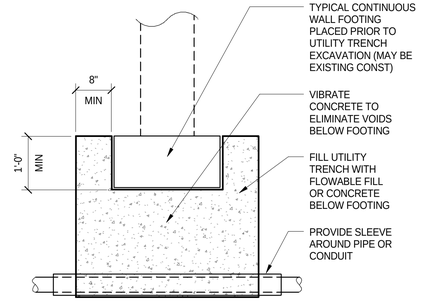

NOTE:
THIS ONLY APPLIES AT LOCATIONS WHERE A NARROW UTILITY TRENCH IS EXCAVATED PERPENDICULAR TO A CONTINUOUS WALL FOOTING.

TYPICAL DETAIL AT UNDERMINED FOOTING

3/4"=1'-0"

TYPICAL CONCRETE FOOTING, WALL AND SLAB REINFORCING BAR LAP SPLICES

BAR SIZE	BOTTOM BAR LAP SPLICE LENGTH	TOP BAR LAP SPLICE LENGTH
#3	1'-4"	1'-5"
#4	1'-5"	1'-11"
#5	1'-10"	2'-4"
#6	2'-2"	2'-10"
#7	3'-7"	4'-7"
#8	4'-6"	5'-10"
#9	5'-6"	7'-2"

1. LAP SPLICE LENGTHS ARE MINIMUMS FOR FOOTINGS, WALLS AND SLABS IN f'c=3000 PSI NORMAL WEIGHT CONCRETE. MULTIPLY THESE LAP SPLICE LENGTHS BY 1.3 FOR USE IN LIGHTWEIGHT CONCRETE.
2. TOP BAR LAP SPLICES APPLY WHEN 12 INCHES OF CONCRETE OR MORE ARE CAST BELOW THE BARS. THIS ALSO APPLIES TO HORIZONTAL BARS IN WALLS.
3. REFER TO OTHER SECTIONS AND DETAILS FOR MORE STRINGENT REQUIREMENTS.

COLUMN FOOTING SCHEDULE

MARK	SIZE	REINF- BOTTOM
F3.0	3'-0"X3'-0"X1'-1"	(5) #4 X 2'-6" EACH WAY
F3.5	3'-6"X3'-6"X1'-1"	(5) #4 X 3'-0" EACH WAY
F4.0	4'-0"X4'-0"X1'-1"	(4) #5 X 3'-6" EACH WAY
F4.5	4'-6"X4'-6"X1'-1"	(4) #5 X 4'-0" EACH WAY
F5.0	5'-0"X5'-0"X1'-8"	(5) #5 X 4'-6" EACH WAY
F5.5	5'-6"X5'-6"X1'-1"	(6) #5 X 5'-0" EACH WAY
F6.0	6'-0"X6'-0"X1'-8"	(7) #5 X 5'-6" EACH WAY
F6.5	6'-6"X6'-6"X1'-4"	(8) #5 X 6'-0" EACH WAY
F7.0	7'-0"X7'-0"X1'-5"	(6) #6 X 6'-6" EACH WAY
F8.0	8'-0"X8'-0"X1'-8"	(6) #7 X 7'-6" EACH WAY
F4X8	4'-0"X8'-0"X1'-4"	(8) #5 X 3'-6" SHORT WAY (5) #5 X 7'-6" LONG WAY
F6.0X17.0	6'-0"X17'-0"X2'-0"	(18) #5 X 5'-6" SHORT WAY (SEE NOTE 6) (7) #5 X 16'-6" LONG WAY
F4.0X22.0	4'-0"X22'-0"X1'-8"	(20) #5 X 3'-6" SHORT WAY (5) #5 X 21'-6" LONG WAY

NOTES:

1. PROVIDE 3" COVER BELOW BOTTOM AND EACH END OF REINFORCING BARS.
2. PROVIDE 2" COVER ABOVE TOP REINFORCING BARS.
3. THIS SCHEDULE IS BASED UPON AN ALLOWABLE SOIL BEARING PRESSURE OF 3000 PSF.
4. AT FOOTINGS INDICATED WITH ★ NEXT TO FOOTING TAG ON PLAN, PROVIDE REINFORCING INDICATED ON SCHEDULE. AT BOTH TOP AND BOTTOM OF FOOTING.
5. PROVIDE FOOTING THICKNESS ABOVE UNLESS OTHERWISE NOTED IN SPECIFIC SECTION OR PLAN NOTE.
6. REF TYPICAL DETAILS ON S2.01 FOR BAR EXTENSIONS INTO ADJACENT FOOTING.

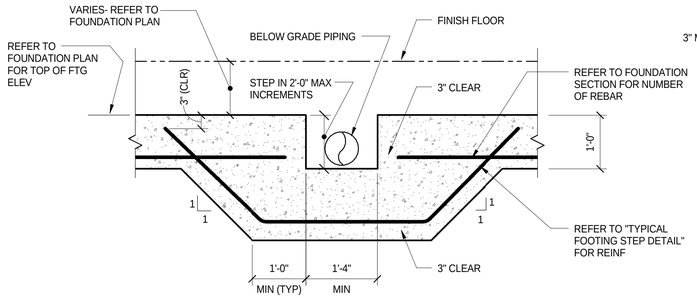

FOOTING STEP FOR BELOW GRADE PIPING

3/4"=1'-0"

NOTES:

1. DETAIL ABOVE APPLIES WHERE UNDERGROUND PIPING CONFLICTS WITH WALL FOOTING. WHERE PIPING WILL PASS UNDER FOOTING WITH A MINIMUM OF 2'-0" CLEARANCE (TOP OF PIPE TO BOTTOM OF FOOTING), STEP IS NOT REQUIRED.
2. COORDINATE PIPING AND FOOTING ELEVATIONS AND STEP FOOTINGS WHERE NECESSARY. STEPS FOR PIPING INDICATED ON THE CONTRACT DOCUMENTS ARE APPROXIMATE AND SHALL BE VERIFIED PRIOR TO POURING CONCRETE.
3. PROVIDE SLEEVE AROUND PIPE THROUGH FOUNDATION WALL.

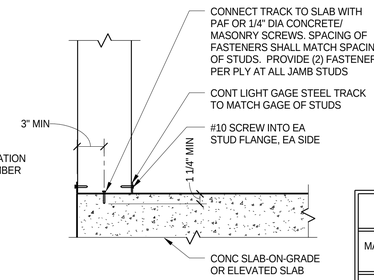

TYPICAL CONNECTION OF LIGHT GAGE STEEL TRACK TO CONCRETE

NO SCALE

STEEL COLUMN BASE PLATE SCHEDULE

MARK	SIZE	HEADED ANCHOR RODS ASTM F1554 Fy= 36 KSI UNO	ROD EMBED	ROD GAUGE	BASE PL TYPE	WELD SIZE	COMMENTS
BP-1	3/4X15X1'-3"	(4) 3/4" DIA	9"	11"	A	5/16"	3 1/2"X3/8"X0'-3 1/2" PL WASHER**
BP-2	1 3/4X20X1'-8"	(8) 1" DIA	22"	16"	E	1/2"	3 1/2"X3/8"X0'-3 1/2" PL WASHER**
BP-3	1 1/2X15X1'-8"	(4) 3/4" DIA	9"	7" X 11"	B	3/8"	3 1/2"X3/8"X0'-3 1/2" PL WASHER**
BP-4	3/4X15X1'-8"	(4) 3/4" DIA	9"	7" X 11"	B	5/16"	3 1/2"X3/8"X0'-3 1/2" PL WASHER**
BP-5	1X16X1'-4"	(3) 3/4" DIA	9"		C	5/16"	3 1/2"X3/8"X0'-3 1/2" PL WASHER**
BP-6	2 1/2X36X3'-2 1/2"	(6) 1" DIA	1'-4"	16" X 32"	D	CJP*	3 1/2"X3/8"X0'-3 1/2" PL WASHER**
BP-7	3/4X12X1'-0"	(4) 3/4" DIA	9"	8"	A	5/16"	

*CJP = PROVIDE COMPLETE JOINT PENETRATION WELD OF COLUMN TO BASE PLATE
**PROVIDE 1/4" FILLET WELDS ((2) SIDES MIN) OF WASHER TO BASE PLATE AFTER BASE PLATE INSTALLATION

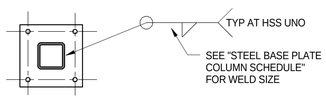

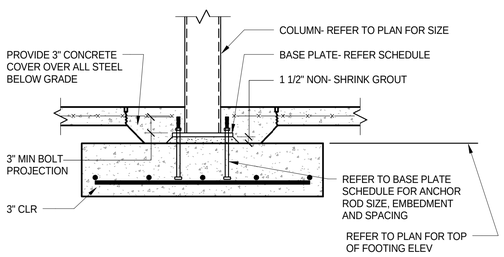

TYPICAL COLUMN FOOTING

3/4"=1'-0"

NOTES
THE BOTTOM OF FOOTINGS SHALL BE POSITIONED NOT TO EXCEED A 1:1 SLOPE TO THE BOTTOM OF ANY FOOTING OR BOTTOM OF ANY TRENCH IN ANY DIRECTION AS INDICATED IN SKETCH.

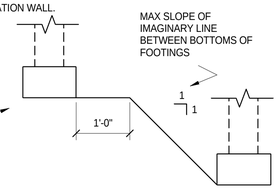

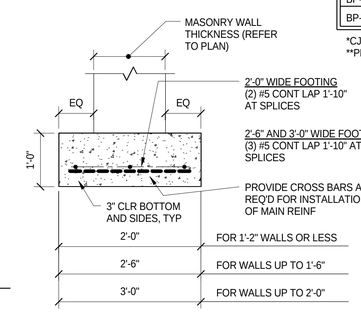

TYPICAL CONTINUOUS FOOTING UNDER MASONRY WALL

3/4"=1'-0"

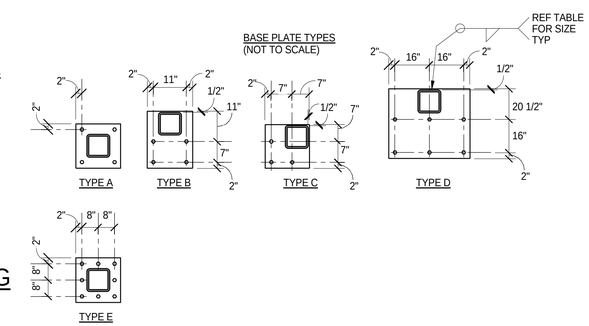

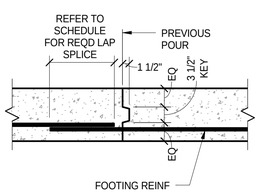

CONTINUOUS WALL FOOTING CONSTRUCTION JOINT (ELEVATION VIEW)

NO SCALE

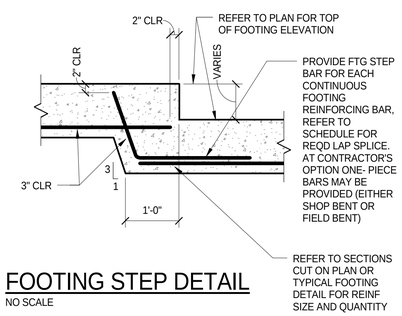

FOOTING STEP DETAIL

NO SCALE

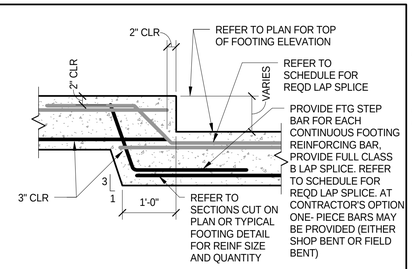

FOOTING STEP DETAIL WITH TOP AND BOT REBAR

NO SCALE

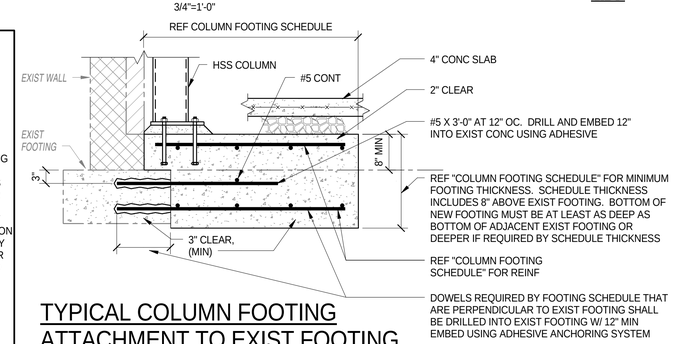

TYPICAL COLUMN FOOTING ATTACHMENT TO EXIST FOOTING

3/4" = 1'-0"

ENTEROS DESIGN
314 EXCHANGE ALLEY
PETERSBURG, VA 23804
804.861.1200 P
804.861.1253 F

All ideas, designs, arrangements and plans indicated or represented by this drawing are property of ENTEROS DESIGN, PC; created, evolved and developed for the sole use of this project. These ideas, design arrangements and/or plans shall not be used by or disclosed to any person, firm or corporation for any purpose without written permission from ENTEROS DESIGN, PC. Written dimensions on these drawings shall have precedence over scaled dimensions. Contractors shall verify and be responsible for all dimensions and conditions on the job. The Architect must be notified of any variations from the dimensions and conditions shown on these drawings.
c 2015 ENTEROS DESIGN, PC

DMWPV Consulting Structural Engineers
DUNBAR MILBY WILLIAMS PITTMAN & VAUGHAN, PLLC
CONSULTING STRUCTURAL ENGINEERS
1025 BOULDERS PARKWAY, SUITE 310
RICHMOND, VIRGINIA 23225-5549
PHONE (804) 323-0656 FAX: (804) 272-3916
DMWPV JOB No. 1504-38

WILLIAMSON ROAD LIBRARY
3837 Williamson Road, Roanoke, VA 24012

CONSTRUCTION DOCUMENTS

REVISIONS:

TYPICAL FOUNDATION DETAILS

PROJ. NO.:1504-38 DRAWN BY:MKJ
4.13.16

COMMONWEALTH OF VIRGINIA
JEFFREY S. DAVIS
Lic. No. 026187
04/13/2016
PROFESSIONAL ENGINEER

S2.01

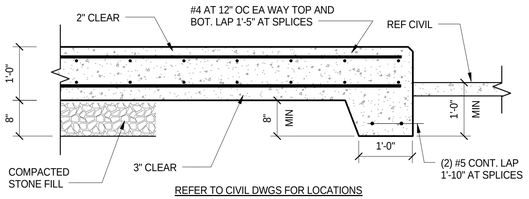

TYPICAL MECHANICAL YARD EQUIPMENT PAD REINFORCING DETAIL

3/4" = 1'-0"

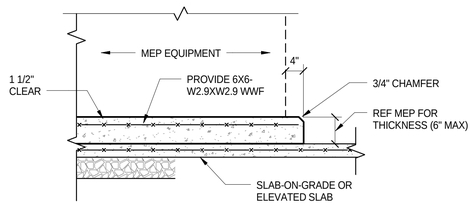

TYPICAL HOUSEKEEPING PAD DETAIL

3/4" = 1'-0"

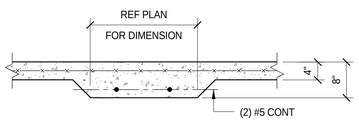

TYPICAL THICKENED SLAB DETAIL

3/4" = 1'-0"

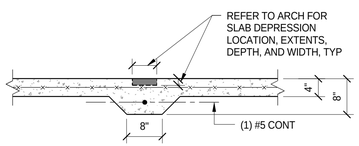

TYPICAL SLAB DEPRESSION DETAIL AT SLIDING DOORS

3/4" = 1'-0"

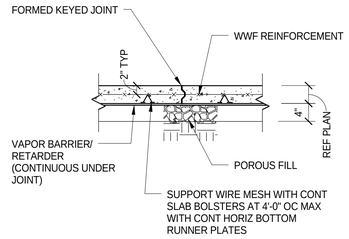

TYPICAL SLAB-ON-GRADE CONSTRUCTION JOINT DETAIL

3/4"=1'-0"

NOTE:
AT CONTRACTOR'S OPTION, 1.5 POUNDS PER CUBIC YARD POLYPROPYLENE MICRO FIBER REINF MAY BE SUBSTITUTED FOR 6X6-W1.4XW1.4 WWF IN 4" SLAB ON GRADE ONLY. AT CONTRACTOR'S OPTION, 3.5 POUNDS PER CUBIC YARD POLYPROPYLENE MACRO FIBER REINF MAY BE SUBSTITUTED FOR 6X6-W2.9XW2.9 WWF IN 6" SLAB-ON-GRADE ONLY.

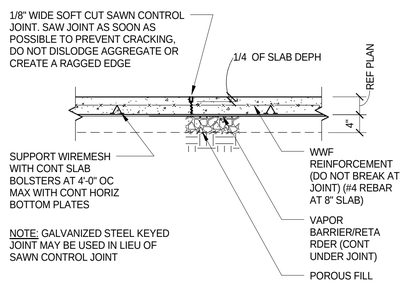

TYPICAL SLAB-ON-GRADE AND CONTROL JOINT DETAIL

3/4"=1'-0"

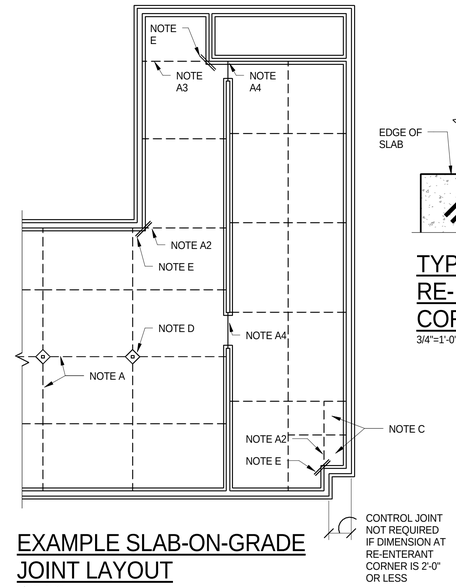

EXAMPLE SLAB-ON-GRADE JOINT LAYOUT

1/16"=1'-0"

JOINT PLACEMENT GUIDELINE

A. LOCATE CONTROL JOINTS AND/ OR CONSTRUCTION JOINTS AT
1. COLUMN CENTERLINES
2. RE-ENTRANT CORNERS OF BUILDING
3. AT CORNERS OF INTERIOR MASONRY WALLS WITH FOOTINGS
4. AT OPENINGS IN MASONRY WALLS WITH FOOTINGS

B. SPACE JOINTS NO MORE THAN THE FOLLOWING:
1. 16 FEET APART- 4" SLABS (12 FEET APART WITH FIBER REINF)
2. 24 FEET APART- 6" SLABS (20 FEET APART WITH FIBER REINF)

C. SUBDIVIDE SLAB AREAS TO LIMIT LENGTH TO WIDTH RATIO OF SLAB AREA TO 2 TO 1 MAXIMUM. PROVIDE SQUARE SLAB AREAS WHERE PRACTICAL.

D. PROVIDE DIAMOND SHAPED JOINT PATTERN AROUND COLUMNS.

E. PROVIDE (2) #4 BARS AT RE-ENTRANT CORNERS OF SLAB PER TYPICAL DETAIL.

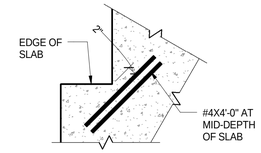

TYP REINF AT RE- ENTRANT CORNERS

3/4"=1'-0"

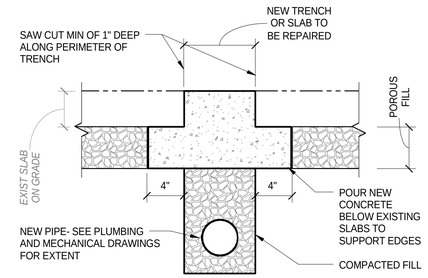

TYPICAL SLAB-ON-GRADE REPAIR DETAIL

1 1/2"=1'-0"

TURN VAPOR BARRIER OR RETARDER UP FACE OF WALL TO PROVIDE BOND BREAK. TRIM FLUSH WITH TOP OF SLAB AFTER CONCRETE HAS HARDENED.

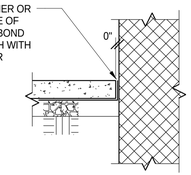

TYPICAL BOND BREAK AT SLAB-ON-GRADE

3/4"=1'-0"

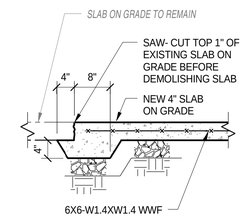

TYPICAL SLAB-ON-GRADE REPAIR DETAIL

3/4"=1'-0"

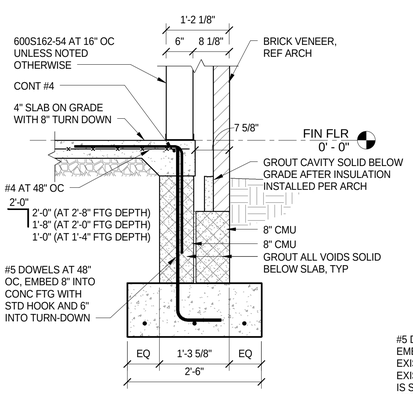

SECTION 1

3/4" = 1'-0"

S1.01 | S2.02

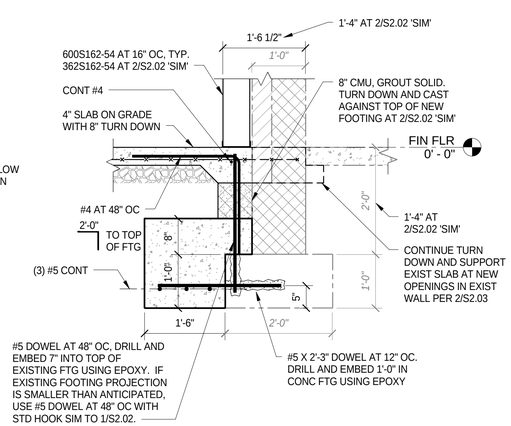

SECTION 2

3/4" = 1'-0"

S1.01 | S2.02

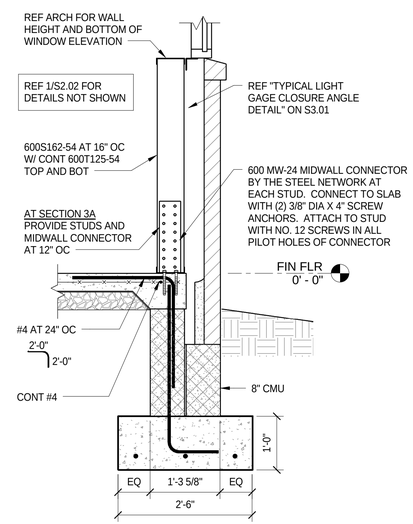

SECTION 3 | 3A

3/4" = 1'-0"

S1.01 | S2.02 | S1.01 | S2.02

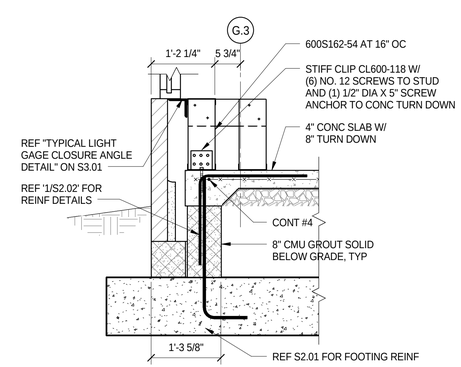

SECTION 4

3/4" = 1'-0"

S1.01 | S2.02

ENTEROS DESIGN
314 EXCHANGE ALLEY
PETERSBURG, VA 23804
804.861.1200 P
804.861.1253 F

All ideas, designs, arrangements and plans indicated or represented by this drawing are property of ENTEROS DESIGN, PC; created, evolved and developed for the sole use of this project. These ideas, design arrangements and/or plans shall not be used by or disclosed to any person, firm or corporation for any purpose without written permission from ENTEROS DESIGN, PC. Written dimensions on these drawings shall have precedence over scaled dimensions. Contractors shall verify and be responsible for all dimensions and conditions on the job. The Architect must be notified of any variations from the dimensions and conditions shown on these drawings.
c 2015 ENTEROS DESIGN, PC

DMWPV Consulting Structural Engineers
DUNBAR MILBY WILLIAMS PITTMAN & VAUGHAN, PLLC
CONSULTING STRUCTURAL ENGINEERS
1025 BOULDERS PARKWAY, SUITE 310
RICHMOND, VIRGINIA 23225-5549
PHONE (804) 323-0656 FAX: (804) 272-3916
DMWPV JOB No. 1504-38

WILLIAMSON ROAD LIBRARY

3837 Williamson Road, Roanoke, VA 24012

CONSTRUCTION DOCUMENTS

REVISIONS:

FOUNDATION SECTIONS AND DETAILS

PROJ. NO.:1504-38 DRAWN BY:MKJ
4.13.16

COMMONWEALTH OF VIRGINIA
JEFFREY S. DAVIS
Lic. No. 026187
04/13/2016
PROFESSIONAL ENGINEER

S2.02

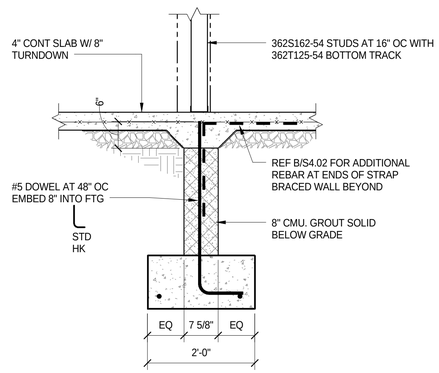

SECTION 1
3/4" = 1'-0"
S1.01 S2.03

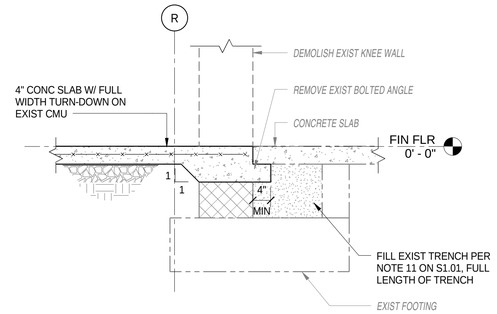

SECTION 2
3/4" = 1'-0"
S1.01 S2.03

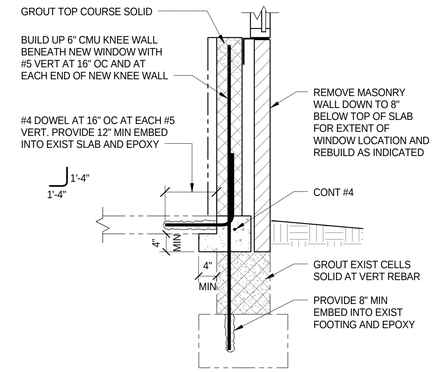

SECTION 3
3/4" = 1'-0"
S1.01 S2.03

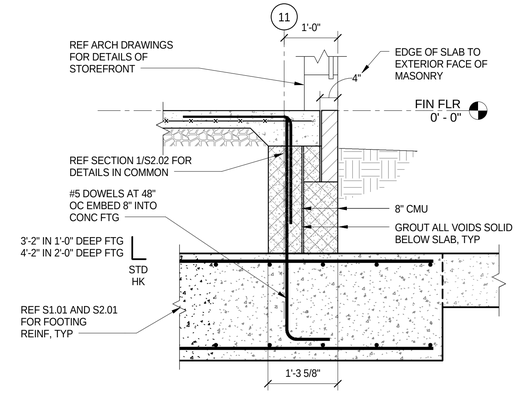

SECTION 4
3/4" = 1'-0"
S1.01 S2.03

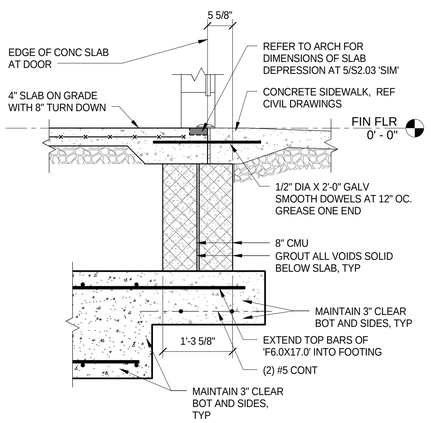

SECTION 5
3/4" = 1'-0"
S1.01 S2.03

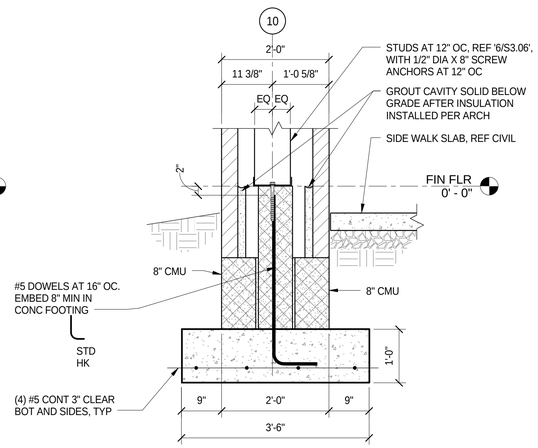

SECTION 6
3/4" = 1'-0"
S1.01 S2.03

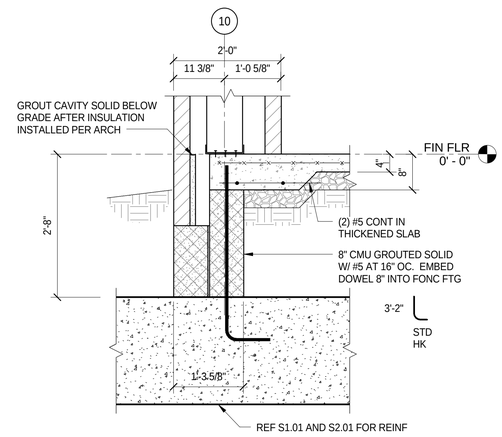

SECTION 7
3/4" = 1'-0"
S1.01 S2.03

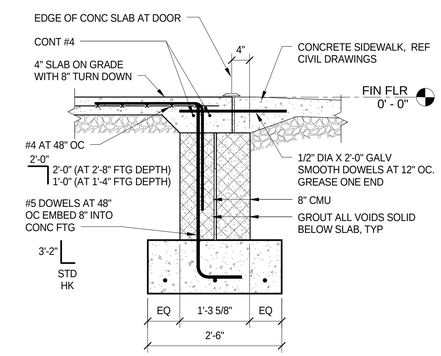

SECTION 8
3/4" = 1'-0"
S1.01 S2.03

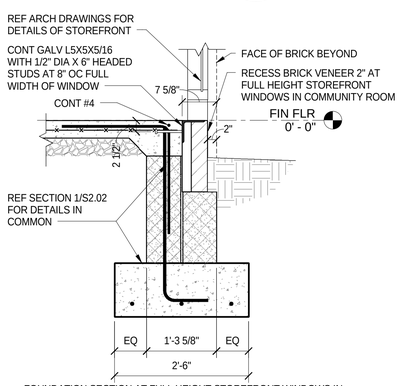

FOUNDATION SECTION AT FULL HEIGHT STOREFRONT WINDOWS IN COMMUNITY ROOM

SECTION 9
3/4" = 1'-0"
S1.01 S2.03

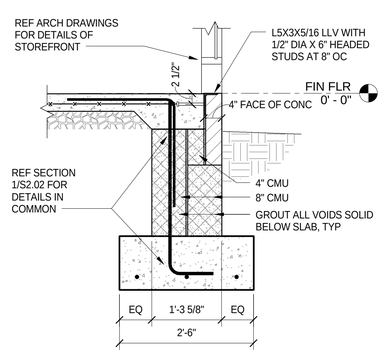

SECTION 10
3/4" = 1'-0"
S1.01 S2.03

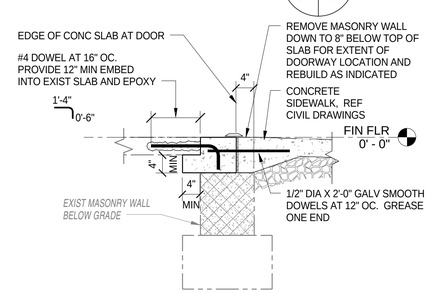

SECTION 11
3/4" = 1'-0"
S1.01 S2.03

ENTEROS DESIGN
314 EXCHANGE ALLEY
PETERSBURG, VA 23804
804.861.1200 P
804.861.1253 F

All ideas, designs, arrangements and plans indicated or represented by this drawing are property of ENTEROS DESIGN, PC; created, evolved and developed for the sole use of this project. These ideas, design arrangements and/or plans shall not be used by or disclosed to any person, firm or corporation for any purpose without written permission from ENTEROS DESIGN, PC. Written dimensions on these drawings shall have precedence over scaled dimensions. Contractors shall verify and be responsible for all dimensions and conditions on the job. The Architect must be notified of any variations from the dimensions and conditions shown on these drawings.
c 2015 ENTEROS DESIGN, PC

DMWPV Consulting Structural Engineers
DUNBAR MILBY WILLIAMS PITTMAN & VAUGHAN, PLLC
CONSULTING STRUCTURAL ENGINEERS
1025 BOULDERS PARKWAY, SUITE 310
RICHMOND, VIRGINIA 23225-5549
PHONE (804) 323-0656 FAX: (804) 272-3916
DMWPV JOB No. 1504-38

WILLIAMSON ROAD LIBRARY

3837 Williamson Road, Roanoke, VA 24012

CONSTRUCTION DOCUMENTS

REVISIONS:

FOUNDATION SECTIONS AND DETAILS

PROJ. NO.:1504-38 DRAWN BY:MKJ
4.13.16

COMMONWEALTH OF VIRGINIA
JEFFREY S. DAVIS
Lic. No. 026187
04/13/2016
PROFESSIONAL ENGINEER

S2.03

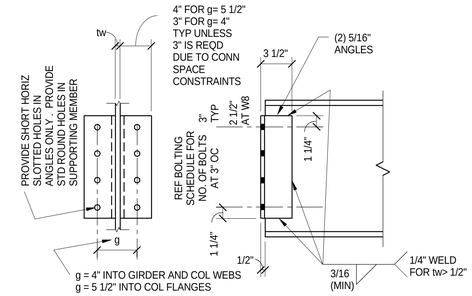

TYPICAL DOUBLE ANGLE CONNECTION

1 1/2"=1'-0"

1. DETAIL APPLIES AT WIDE FLANGE BEAM CONNECTIONS TO COLUMNS AND OTHER WIDE FLANGE BEAMS.
2. AT BEAM TO GIRDER CONNECTIONS, PROVIDE ERECTION SEAT ANGLE FOR ONE BEAM WHERE MEMBERS FRAME OPPOSITE EACH OTHER AND USE SAME NUMBER OF BOLTS.
3. REFER TO MINIMUM BOLTING SCHEDULE FOR REQUIRED NUMBER OF ROWS OF BOLTS.

MINIMUM BOLTING SCHEDULE

BEAM SIZE	# OF BOLTS IN SINGLE SHEAR CONN/SINGLE ANGLE	# OF BOLTS IN DOUBLE ANGLE CONN
W8	2	2 ANGLE X 2 BOLTS= 4 TOTAL
W10	2	2 ANGLE X 2 BOLTS= 4 TOTAL
W12	3	2 ANGLE X 3 BOLTS= 6 TOTAL
W14	3	2 ANGLE X 3 BOLTS= 6 TOTAL
W16	4	2 ANGLE X 4 BOLTS= 8 TOTAL
W18	5	2 ANGLE X 4 BOLTS= 8 TOTAL
W21	6	2 ANGLE X 5 BOLTS= 10 TOTAL
W24	7	2 ANGLE X 5 BOLTS= 10 TOTAL

NOTES:

1. BOLTS ARE 3/4" DIA ASTM A325N UNO.
2. BOLT HOLES FOR SINGLE SHEAR CONN OR SINGLE ANGLE CONN SHALL BE HORIZ SHORT- SLOTTED HOLES UNO- PROVIDE STD ROUND HOLES AT FULL HEIGHT STIFF PLATES, OR THRUPLATES.
3. SINGLE SHEAR CONN SHALL BE 3/8" SHEAR TAB OR 3/8" FULL HEIGHT STIFF PLATE AS INDICATED IN DETAILS. REF PLANS FOR 3/8" THRU- PLATE CONNECTION LOCATIONS.
4. STANDARD DOUBLE ANGLE THICKNESS SHALL BE 5/16" MINIMUM. USE SHORT HORIZ SLOTTHOLES IN ANGLE.
5. WHERE SLIP CRITICAL CONNECTION OR FULLY PRE- TENSIONED BOLTS ARE INDICATED, USE TENSION CONTROL BOLTS (TWIST-OFF TYPE).
6. AT POJ BEAM-TO-GIRDER CONNECTIONS, PROVIDE DOUBLE ANGLE CONNECTION PER THIS SCHEDULE UNLESS NOTED OTHERWISE

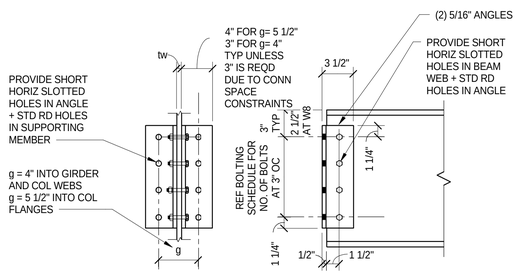

BOLTED-BOLTED DOUBLE ANGLE CONNECTION

1 1/2"=1'-0"

1. DETAIL APPLIES AT WIDE FLANGE BEAM CONNECTIONS TO COLUMNS AND OTHER WIDE FLANGE BEAMS.
2. AT BEAM TO GIRDER CONNECTIONS, PROVIDE ERECTION SEAT ANGLE FOR ONE BEAM WHERE MEMBERS FRAME OPPOSITE EACH OTHER AND USE SAME NUMBER OF BOLTS.
3. REFER TO MINIMUM BOLTING SCHEDULE FOR REQUIRED NUMBER OF ROWS OF BOLTS.

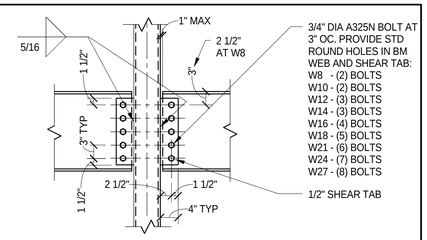

TYPICAL BEAM TO HSS COLUMN SHEAR TAB CONNECTION

3/4"=1'-0"

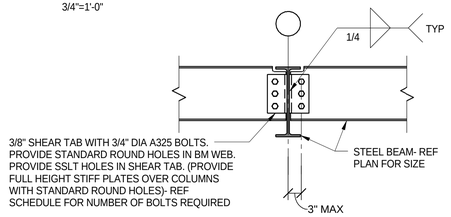

NOTE:
USE DOUBLE ANGLE CONNECTION AT POJ BEAMS.

TYPICAL BEAM TO INTERIOR GIRDER CONNECTION (TWO SIDED)

3/4"=1'-0"

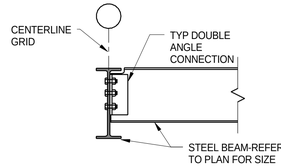

TYPICAL BEAM TO PERIMETER GIRDER CONNECTION (ONE SIDED)

3/4"=1'-0"

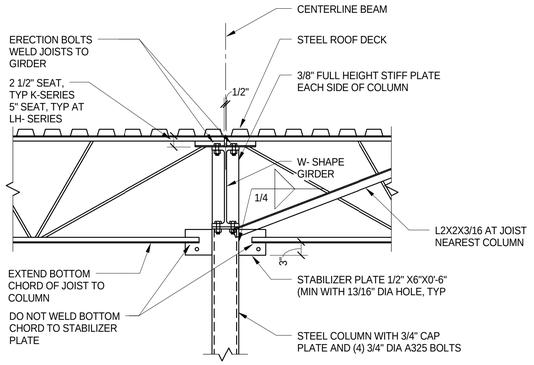

NOTE: IF GIRDER IS DEEPER THAN JOIST EXTEND STABILIZER PLATE ABOVE TOP OF COLUMN OR ATTACH ADDITIONAL STABILIZE PLATE TO GIRDER FOR JOIST BOTTOM CHORDS.

TYPICAL SECTION AT STEEL JOIST LOCATED AT COLUMN

3/4"=1'-0"

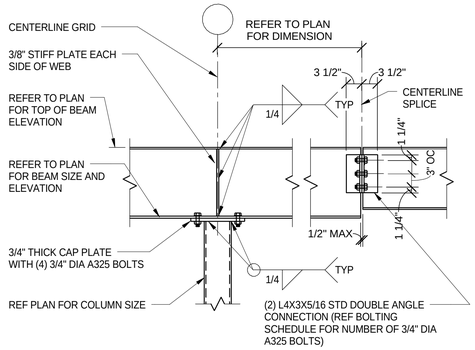

TYPICAL BEAM TO TOP OF COLUMN CONNECTION AND BEAM SPLICE DETAIL

3/4"= 1'-0"

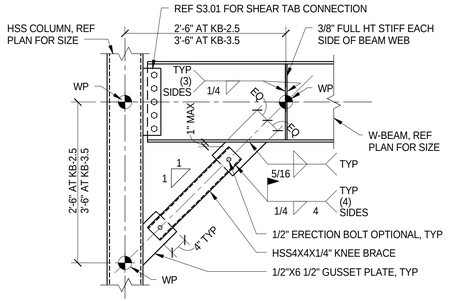

KNEE BRACE CONNECTION DETAILS

3/4" = 1'-0"

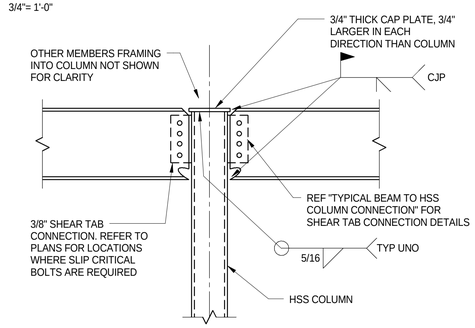

TYPICAL FULL MOMENT CONNECTION BEAM TO HSS COLUMN

3/4"= 1'-0"

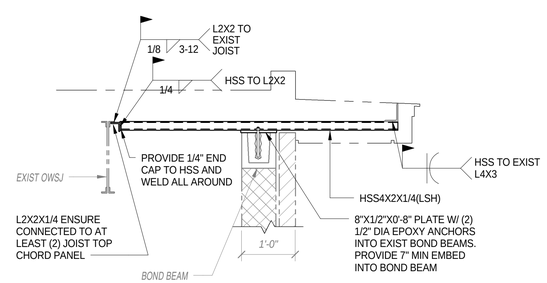

OVERHANG SUPPORT WHERE CUT ADJACENT TO NEW ADDITION

3/4" = 1'-0"

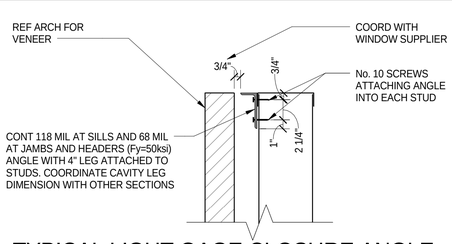

TYPICAL LIGHT GAGE CLOSURE ANGLE DETAIL AT ALL SILLS, JAMBS AND HEADS AT STUD WALLS WITH MASONRY VENEER (PROVIDE SIMILAR DETAIL AT METAL PANEL CONDITION)

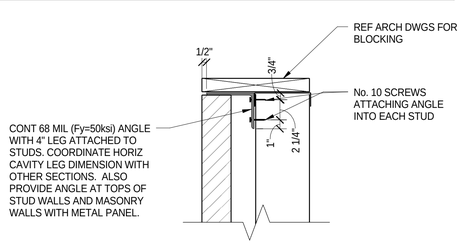

TYPICAL LIGHT GAGE CLOSURE ANGLE DETAIL AT TOP OF PARAPETS OF STUD WALLS

ENTEROS DESIGN
314 EXCHANGE ALLEY
PETERSBURG, VA 23804
804.861.1200 P
804.861.1253 F

All ideas, designs, arrangements and plans indicated or represented by this drawing are property of ENTEROS DESIGN, PC; created, evolved and developed for the sole use of this project. These ideas, design arrangements and/or plans shall not be used by or disclosed to any person, firm or corporation for any purpose without written permission from ENTEROS DESIGN, PC. Written dimensions on these drawings shall have precedence over scaled dimensions. Contractors shall verify and be responsible for all dimensions and conditions on the job. The Architect must be notified of any variations from the dimensions and conditions shown on these drawings.
c 2015 ENTEROS DESIGN, PC

DMWPV Consulting Structural Engineers
DUNBAR MILBY WILLIAMS PITTMAN & VAUGHAN, PLLC
CONSULTING STRUCTURAL ENGINEERS
1025 BOULDERS PARKWAY, SUITE 310
RICHMOND, VIRGINIA 23225-5549
PHONE (804) 323-0656 FAX: (804) 272-3916
DMWPV JOB No. 1504-38

WILLIAMSON ROAD LIBRARY
3837 Williamson Road, Roanoke, VA 24012

CONSTRUCTION DOCUMENTS

REVISIONS:

TYPICAL ROOF FRAMING DETAILS

PROJ. NO.:1504-38 DRAWN BY:MKJ
4.13.16

COMMONWEALTH OF VIRGINIA
JEFFREY S. DAVIS
Lic. No. 026187
04/13/2016
PROFESSIONAL ENGINEER

S3.01

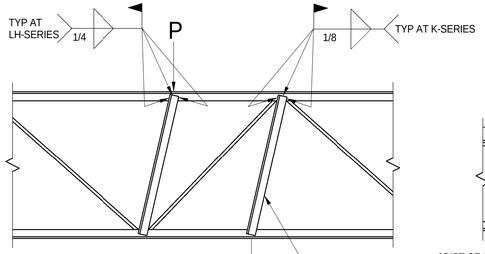

NOTE: IF CONCENTRATED LOAD EXCEEDS 300 POUNDS AND DOES NOT OCCUR WITHIN 6 INCHES OF TOP OR BOTTOM CHORD PANEL POINT, PROVIDE L2X2X3/16 TO OPPOSITE CHORD. WELD EACH END.

L2X2X3/16 ADDED EACH SIDE OF K-SERIES JOIST
L3 1/2X3 1/2X1/4 ADDED EACH SIDE OF LH-SERIES JOIST

NOTE: ANY LOADS GREATER THAN 300 POUNDS SHALL BE HUNG WITH A ROD BETWEEN JOIST CHORDS. DO NOT HANG HEAVY LOADS FROM CLAMP ATTACHED TO ONE CHORD ANGLE LEG.

TYPICAL JOIST CHORD REINF DETAIL

NO SCALE

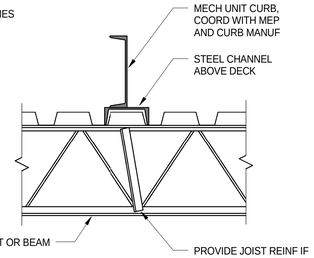

ROOF MOUNTED MECHANICAL UNIT FRAMING

NO SCALE

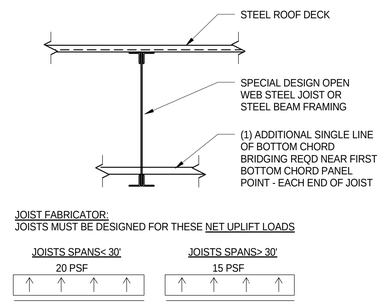

TYPICAL ROOF JOIST SERVICE LEVEL UPLIFT LOADS

3/4"=1'-0"

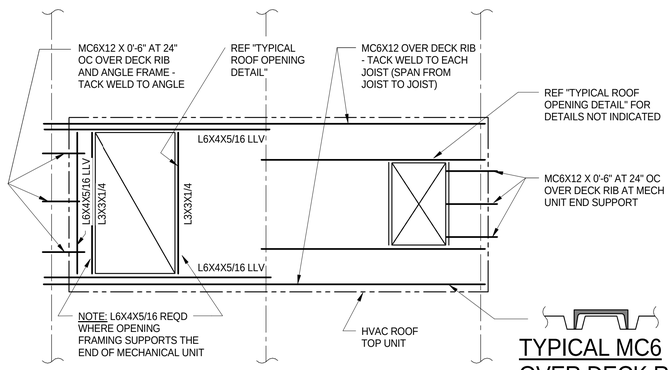

TYPICAL ROOF TOP UNIT SUPPORT DETAIL (UNIT PERPENDICULAR TO JOISTS)

NO SCALE

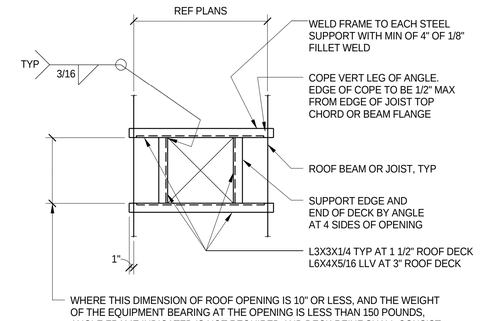

WHERE THIS DIMENSION OF ROOF OPENING IS 10" OR LESS, AND THE WEIGHT OF THE EQUIPMENT BEARING AT THE OPENING IS LESS THAN 150 POUNDS, ANGLE FRAME INDICATED IS NOT REQUIRED AND DECK REINF SHALL CONSIST OF A 20" SQUARE, 14 GAUGE PLATE, SCREW PLATE TO DECK. WHERE THIS OPENING IS 3 1/2" OR LESS AND THROUGH THE TOP OF THE DECK BETWEEN RIBS AND NO RIBS ARE CUT, NO REINF IS REQUIRED. ALL OPENINGS FOR ROOF DRAINS OR OVERFLOW DRAINS REQUIRE ANGLE FRAMES REGARDLESS OF THE PIPE SIZE INDICATED ON THE PLUMBING DRAWINGS.

NOTE: THIS "TYPICAL ROOF OPENING FRAMING DETAIL" APPLIES TO ALL OPENINGS IN THE ROOF DECK THAT MAY BE INDICATED ON DRAWINGS OR NOT INDICATED AND ARE CUT IN THE FIELD AS PART OF THE CONSTRUCTION. THE CONTRACTOR SHALL REVIEW STRUCTURAL, ARCHITECTURAL, MECHANICAL, PLUMBING AND ELECTRICAL DRAWINGS TO DETERMINE LOCATION AND SIZES OF OPENINGS THAT CAN BE DETERMINED FROM THE DRAWINGS. THE CONTRACTOR SHALL COORDINATE THE REQUIRED OPENING SIZES FOR EACH REQUIRED PENETRATION AND PROVIDE DECK REINFORCEMENT OR SUPPORT IN ACCORDANCE WITH THIS DETAIL.

IN LIEU OF STEEL ANGLE FRAME, THE FOLLOWING ADJUSTABLE FRAMES MAY BE SUBSTITUTED:

1. L3X3X1/4 CAN BE REPLACED BY A 16GA QUICK FRAME WITH SINGLE 10GA END CONNECTORS.
2. L6X4X5/16 CAN BE REPLACED BY A 12GA QUICK FRAME WITH SINGLE 3/16" THICK ANGLE END CONNECTORS.
3. QUICK FRAMES ARE MANUFACTURED BY SOYKO INDUSTRIES, LLC OF MESA, ARIZONA.

TYPICAL ROOF OPENING FRAMING DETAIL

NO SCALE

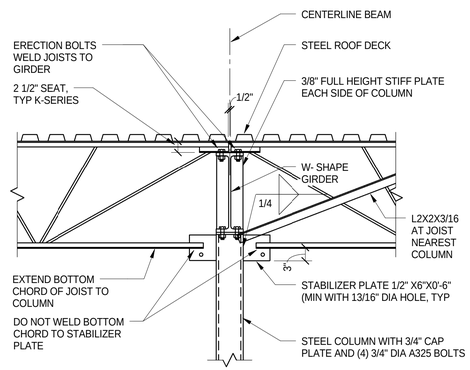

NOTES:

1. IF GIRDER IS DEEPER THAN JOIST EXTEND STABILIZER PLATE ABOVE TOP OF COLUMN OR ATTACH ADDITIONAL STABILIZE PLATE TO GIRDER FOR JOIST BOTTOM CHORDS.
2. IF NO GIRDER PRESENT, BEAR JOIST ON 1/2" THICK COLUMN CAP PLATE AND CONNECT WITH MIN OF (2) ERECTION BOLTS.

TYPICAL SECTION AT STEEL JOIST LOCATED AT COLUMN

3/4"=1'-0"

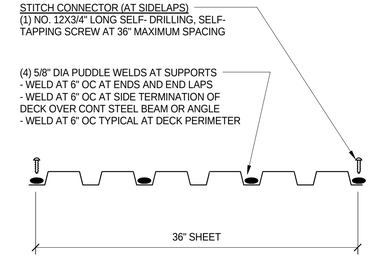

TYPICAL 1 1/2" STEEL ROOF DECK ATTACHMENT

1 1/2"=1'-0"

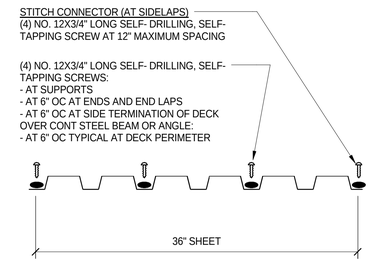

TYPICAL 1 1/2" STEEL ROOF DECK ATTACHMENT - SCREW OPTION AT CANOPY ROOF

1 1/2"=1'-0"

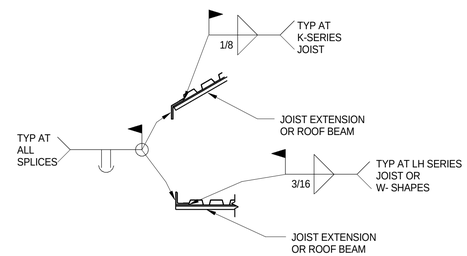

TYPICAL WELDING OF PERIMETER ROOF ANGLES

3/4" = 1'-0"

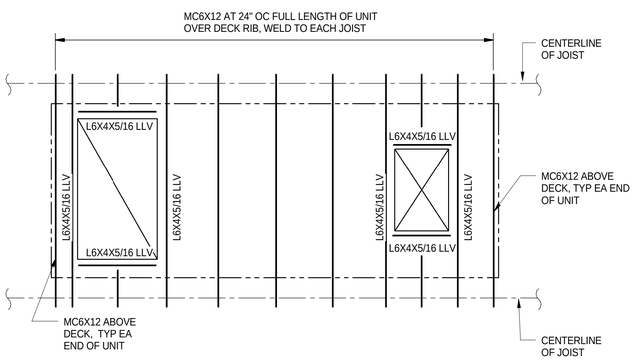

TYPICAL ROOF TOP UNIT SUPPORT DETAIL (UNIT PARALLEL TO JOISTS)

NO SCALE

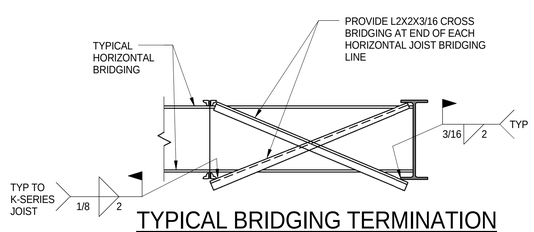

TYPICAL BRIDGING TERMINATION AT STEEL BEAM

3/4"= 1'-0"

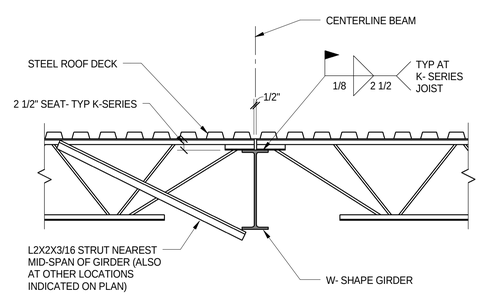

TYPICAL CONNECTION OF OPEN WEB STEEL JOISTS TO STEEL ROOF GIRDER

3/4"= 1'-0"

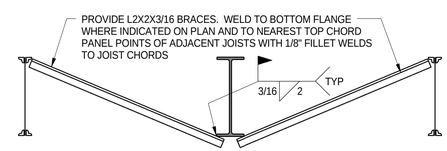

TYPICAL ANGLE BRACING AT STEEL BEAM

3/4"= 1'-0"

ENTEROS DESIGN
314 EXCHANGE ALLEY
PETERSBURG, VA 23804
804.861.1200 P
804.861.1253 F

All ideas, designs, arrangements and plans indicated or represented by this drawing are property of ENTEROS DESIGN, PC; created, evolved and developed for the sole use of this project. These ideas, design arrangements and/or plans shall not be used by or disclosed to any person, firm or corporation for any purpose without written permission from ENTEROS DESIGN, PC. Written dimensions on these drawings shall have precedence over scaled dimensions. Contractors shall verify and be responsible for all dimensions and conditions on the job. The Architect must be notified of any variations from the dimensions and conditions shown on these drawings.
c 2015 ENTEROS DESIGN, PC

DMWPV Consulting Structural Engineers
DUNBAR MILBY WILLIAMS PITTMAN & VAUGHAN, PLLC
CONSULTING STRUCTURAL ENGINEERS
1025 BOULDERS PARKWAY, SUITE 310
RICHMOND, VIRGINIA 23225-5549
PHONE (804) 323-0656 FAX: (804) 272-3916
DMWPV JOB No. 1504-38

WILLIAMSON ROAD LIBRARY
3837 Williamson Road, Roanoke, VA 24012

CONSTRUCTION DOCUMENTS

REVISIONS:

TYPICAL ROOF DETAILS

PROJ. NO.:1504-38 DRAWN BY:MKJ
4.13.16

COMMONWEALTH OF VIRGINIA
JEFFREY S. DAVIS
Lic. No. 026187
04/13/2016
PROFESSIONAL ENGINEER

S3.02

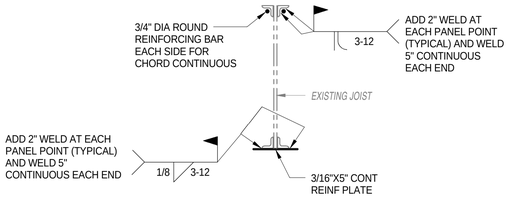

TYPICAL SHORT SPAN JOIST CHORD REINFORCEMENT

DETAIL 4 (S3.03 | S3.03)

1 1/2"=1'-0"

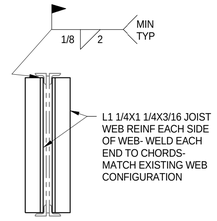

TYPICAL SHORT SPAN JOIST WEB REINFORCEMENT

DETAIL 5 (S3.03 | S3.03)

1 1/2"=1'-0"

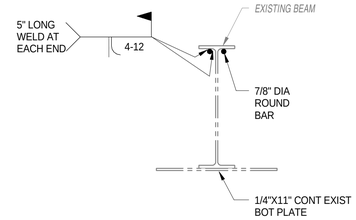

TYPICAL BEAM REINFORCEMENT DETAIL

1 1/2"=1'-0"

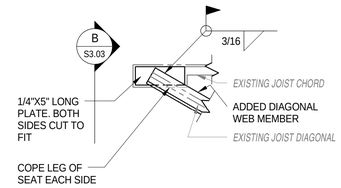

TYPICAL JOIST END SEAT REINFORCEMENT

DETAIL A (S3.03 | S3.03)

1 1/2"=1'-0"

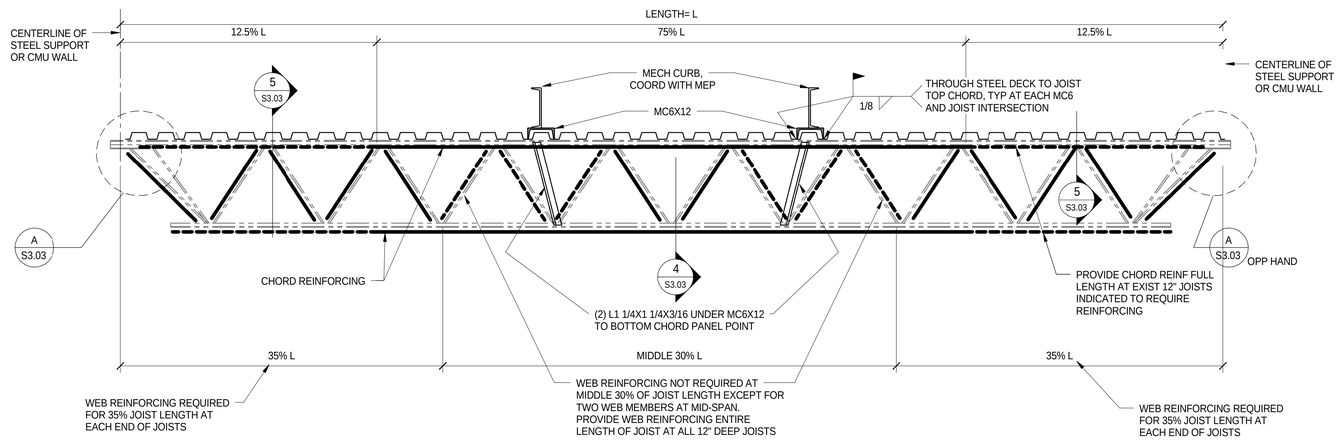

TYPICAL JOIST REINFORCEMENT DIAGRAM

NO SCALE

1. CHORD REINFORCING ROUND BARS AND BOT PLATES SHALL BE ONE PIECE OR PROVIDE SPLICES WITH FULL PENETRATION GROOVE WELD (45°BEVEL).

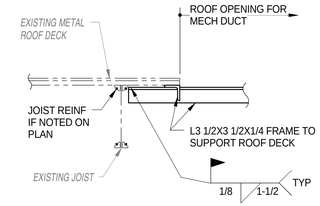

TYPICAL JOIST WEB REINFORCEMENT AT NEW ROOF OPENING FOR MECH DUCT

NO SCALE

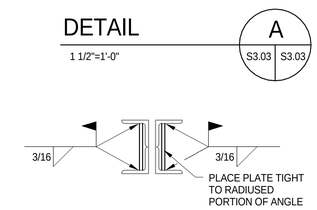

DETAIL B (S3.03 | S3.03)

1 1/2"=1'-0"

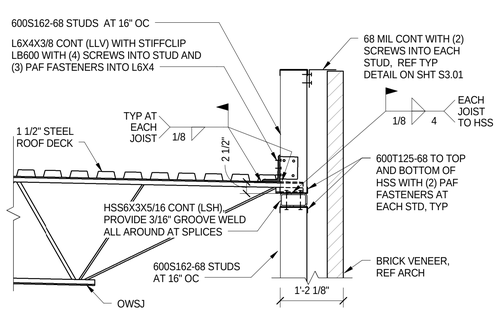

SECTION 1 (S1.02 | S3.03)

3/4" = 1'-0"

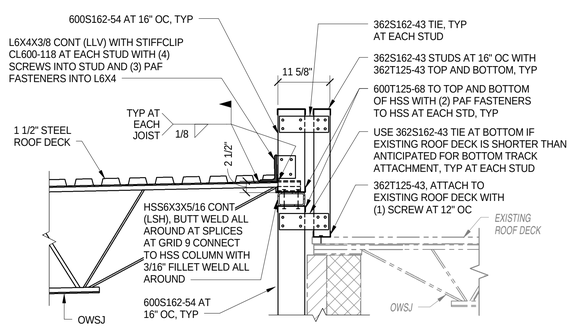

SECTION 2 (S1.02 | S3.03)

3/4" = 1'-0"

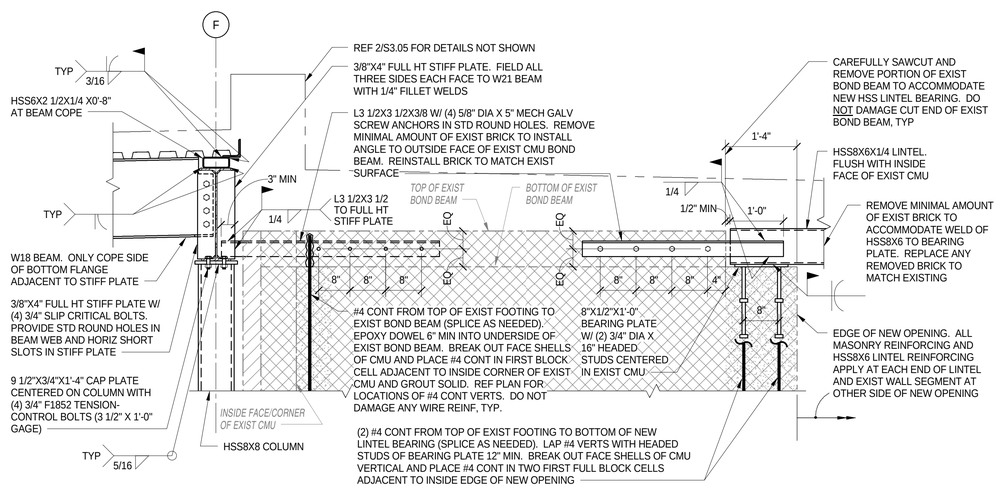

SECTION 3 (S1.02 | S3.03)

3/4" = 1'-0"

ENTEROS DESIGN

314 EXCHANGE ALLEY
PETERSBURG, VA 23804

804.861.1200 P
804.861.1253 F

All ideas, designs, arrangements and plans indicated or represented by this drawing are property of ENTEROS DESIGN, PC; created, evolved and developed for the sole use of this project. These ideas, design arrangements and/or plans shall not be used by or disclosed to any person, firm or corporation for any purpose without written permission from ENTEROS DESIGN, PC. Written dimensions on these drawings shall have precedence over scaled dimensions. Contractors shall verify and be responsible for all dimensions and conditions on the job. The Architect must be notified of any variations from the dimensions and conditions shown on these drawings.
c 2015 ENTEROS DESIGN, PC

DMWPV Consulting Structural Engineers

DUNBAR MILBY WILLIAMS PITTMAN & VAUGHAN, PLLC
CONSULTING STRUCTURAL ENGINEERS
1025 BOULDERS PARKWAY, SUITE 310
RICHMOND, VIRGINIA 23225-5549
PHONE (804) 323-0656 FAX: (804) 272-3916
DMWPV JOB No. 1504-38

WILLIAMSON ROAD LIBRARY

3837 Williamson Road, Roanoke, VA 24012

CONSTRUCTION DOCUMENTS

REVISIONS:

ROOF SECTIONS AND DETAILS AND JOIST REINFORCEMENT

PROJ. NO.:1504-38 DRAWN BY:MKJ
4.13.16

COMMONWEALTH OF VIRGINIA
JEFFREY S. DAVIS
Lic. No. 026187
04/13/2016
PROFESSIONAL ENGINEER

S3.03

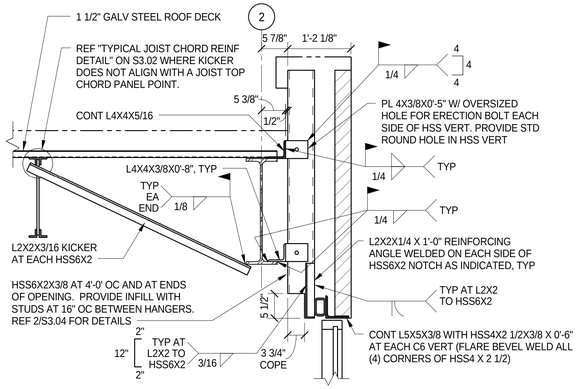

SECTION 1 — 3/4" = 1'-0" — S1.02 | S3.04

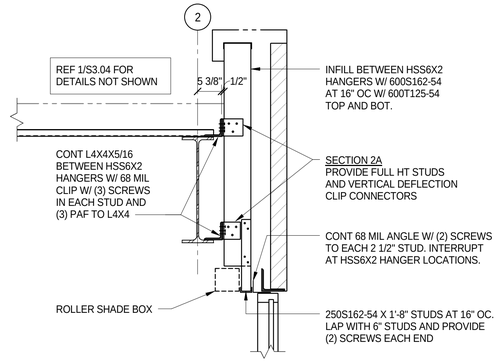

SECTION 2 / 2A — 3/4" = 1'-0" — S1.02 | S3.04 ; S1.02 | S3.04

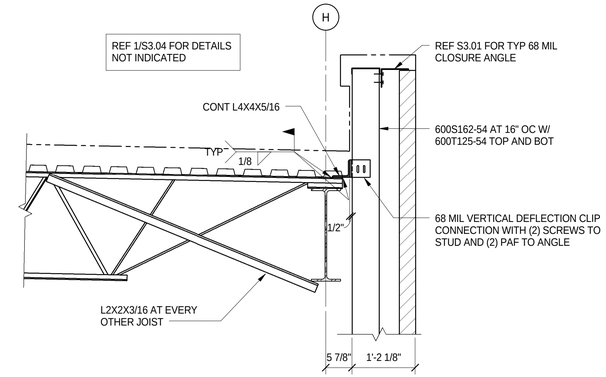

SECTION 3 — 3/4" = 1'-0" — S1.02 | S3.04

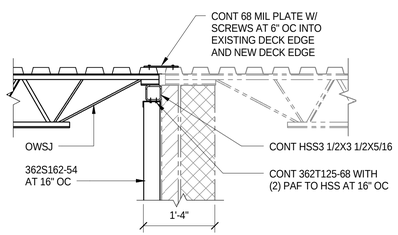

SECTION 4 — 3/4" = 1'-0" — S1.02 | S3.04

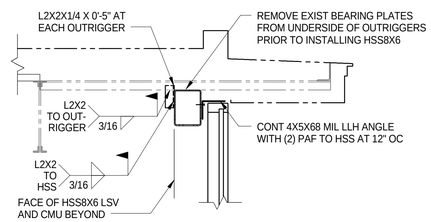

SECTION 5 — 3/4" = 1'-0" — S1.02 | S3.04

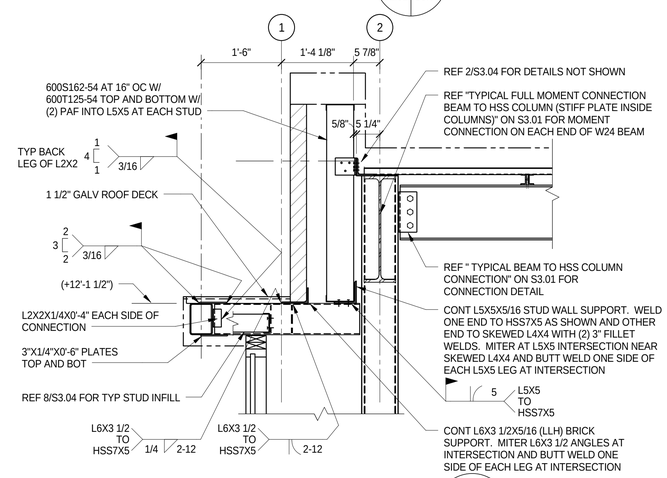

SECTION 6 — 3/4" = 1'-0" — S1.02 | S3.04

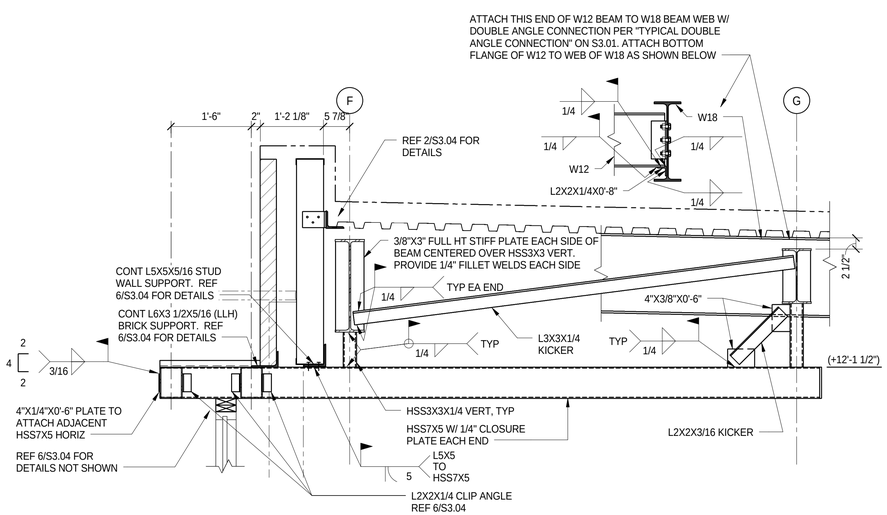

SECTION 7 — 3/4" = 1'-0" — S1.02 | S3.04

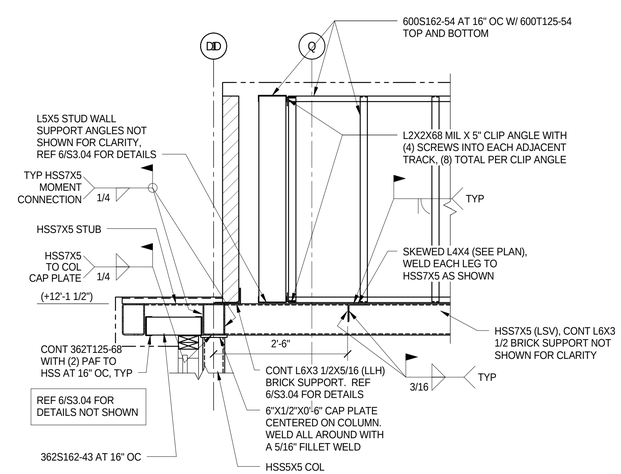

SECTION 8 — 3/4" = 1'-0" — S1.02 | S3.04

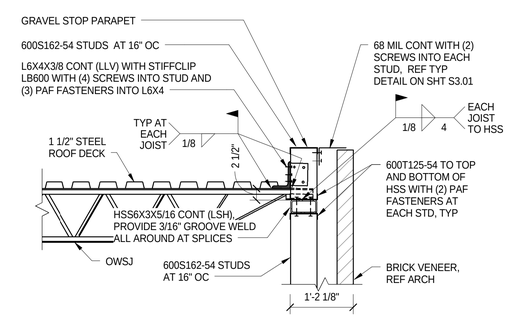

SECTION 9 — 3/4" = 1'-0" — S1.02 | S3.04

ENTEROS DESIGN
314 EXCHANGE ALLEY
PETERSBURG, VA 23804
804.861.1200 P
804.861.1253 F

All ideas, designs, arrangements and plans indicated or represented by this drawing are property of ENTEROS DESIGN, PC; created, evolved and developed for the sole use of this project. These ideas, design arrangements and/or plans shall not be used by or disclosed to any person, firm or corporation for any purpose without written permission from ENTEROS DESIGN, PC. Written dimensions on these drawings shall have precedence over scaled dimensions. Contractors shall verify and be responsible for all dimensions and conditions on the job. The Architect must be notified of any variations from the dimensions and conditions shown on these drawings.
c 2015 ENTEROS DESIGN, PC

DMWPV Consulting Structural Engineers
DUNBAR MILBY WILLIAMS PITTMAN & VAUGHAN, PLLC
CONSULTING STRUCTURAL ENGINEERS
1025 BOULDERS PARKWAY, SUITE 310
RICHMOND, VIRGINIA 23225-5549
PHONE (804) 323-0656 FAX: (804) 272-3916
DMWPV JOB No. 1504-38

WILLIAMSON ROAD LIBRARY

3837 Williamson Road, Roanoke, VA 24012

CONSTRUCTION DOCUMENTS

REVISIONS

ROOF SECTIONS AND DETAILS

PROJ. NO.:1504-38 DRAWN BY:MKJ
4.13.16

COMMONWEALTH OF VIRGINIA
JEFFREY S. DAVIS
Lic. No. 026187
04/13/2016
PROFESSIONAL ENGINEER

S3.04

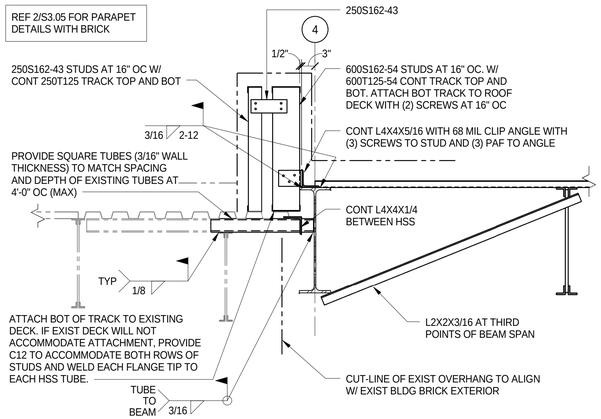

SECTION 1
3/4" = 1'-0"
S1.02 | S3.05

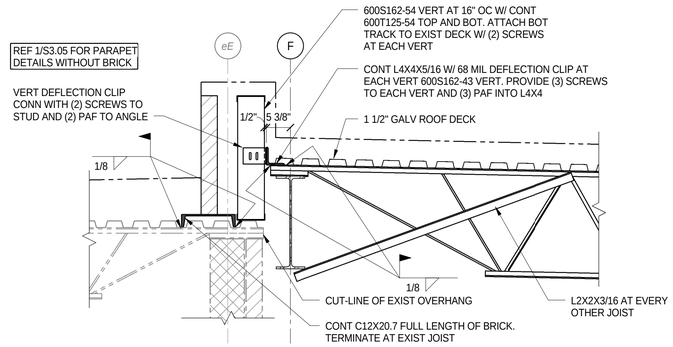

SECTION 2
3/4" = 1'-0"
S1.02 | S3.05

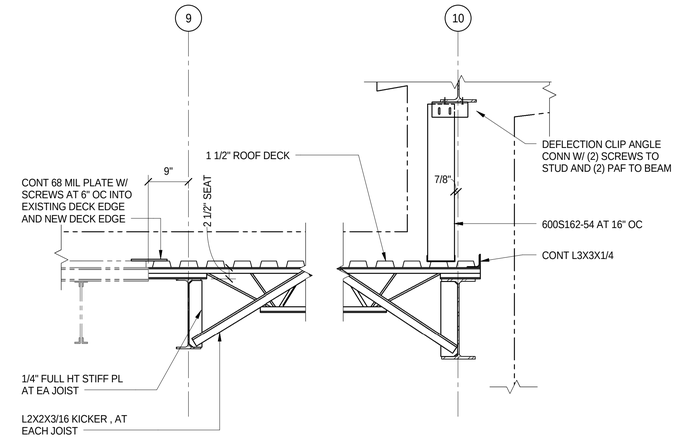

SECTION 3
3/4" = 1'-0"
S1.02 | S3.05

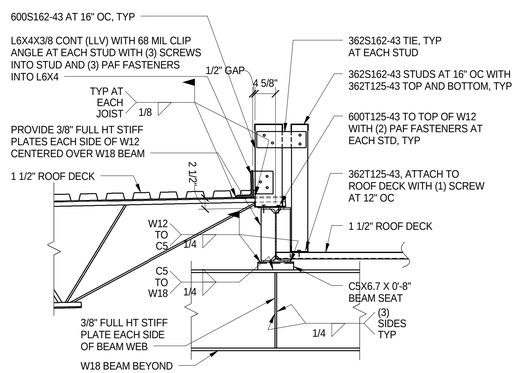

SECTION 4
3/4" = 1'-0"
S1.02 | S3.05

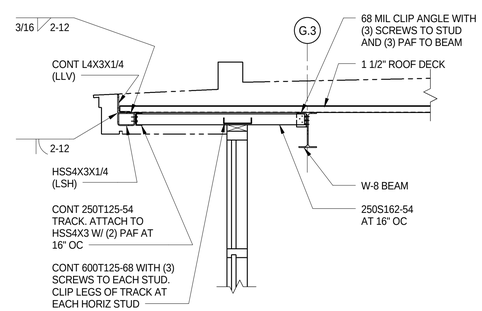

SECTION 5
3/4" = 1'-0"
S1.02 | S3.05

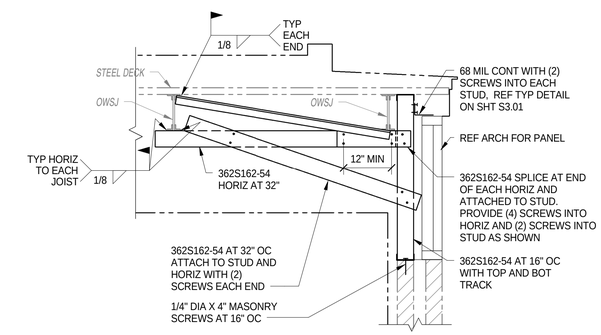

SECTION 6
3/4" = 1'-0"
S1.02 | S3.05

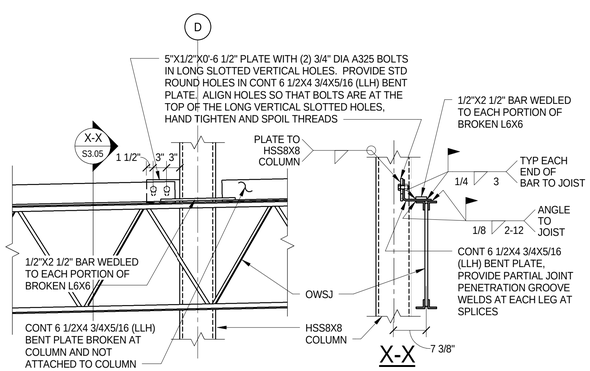

SECTION 7
3/4" = 1'-0"
S1.02 | S3.05

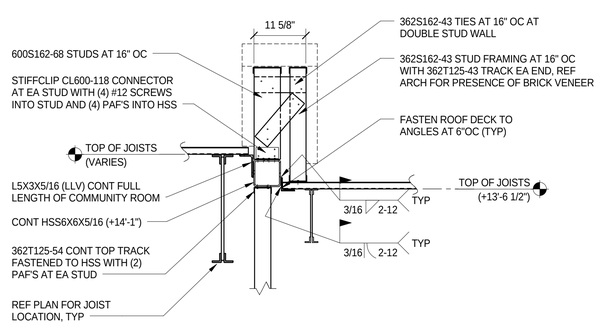

SECTION 8
3/4" = 1'-0"
S1.02 | S1.04 | S3.05

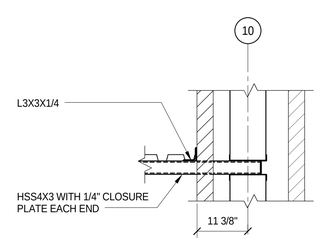

SECTION 9
3/4" = 1'-0"
S1.02 | S3.05

ENTEROS DESIGN
314 EXCHANGE ALLEY
PETERSBURG, VA 23804
804.861.1200 P
804.861.1253 F

All ideas, designs, arrangements and plans indicated or represented by this drawing are property of ENTEROS DESIGN, PC; created, evolved and developed for the sole use of this project. These ideas, design arrangements and/or plans shall not be used by or disclosed to any person, firm or corporation for any purpose without written permission from ENTEROS DESIGN, PC. Written dimensions on these drawings shall have precedence over scaled dimensions. Contractors shall verify and be responsible for all dimensions and conditions on the job. The Architect must be notified of any variations from the dimensions and conditions shown on these drawings.
c 2015 ENTEROS DESIGN, PC

DMW PV
Consulting Structural Engineers
DUNBAR MILBY WILLIAMS PITTMAN & VAUGHAN, PLLC
CONSULTING STRUCTURAL ENGINEERS
1025 BOULDERS PARKWAY, SUITE 310
RICHMOND, VIRGINIA 23225-5549
PHONE (804) 323-0656 FAX: (804) 272-3916
DMWPV JOB No. 1504-38

WILLIAMSON ROAD LIBRARY

3837 Williamson Road, Roanoke, VA 24012

CONSTRUCTION DOCUMENTS

REVISIONS:

ROOF SECTIONS AND DETAILS

PROJ. NO.:1504-38 DRAWN BY:MKJ
4.13.16

COMMONWEALTH OF VIRGINIA
JEFFREY S. DAVIS
Lic. No. 026187
04/13/2016
PROFESSIONAL ENGINEER

S3.05

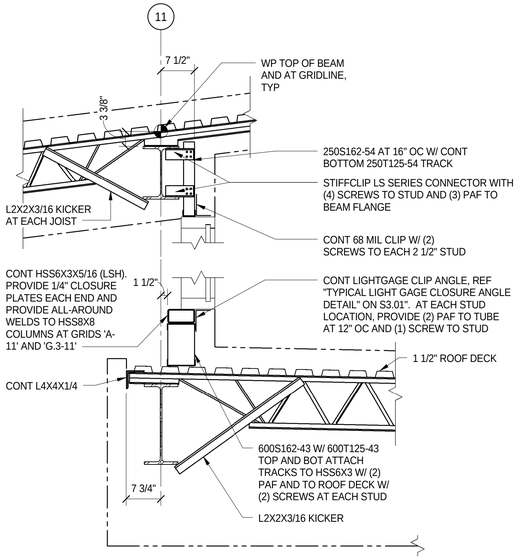

SECTION 1
3/4" = 1'-0"
S1.02 | S3.06

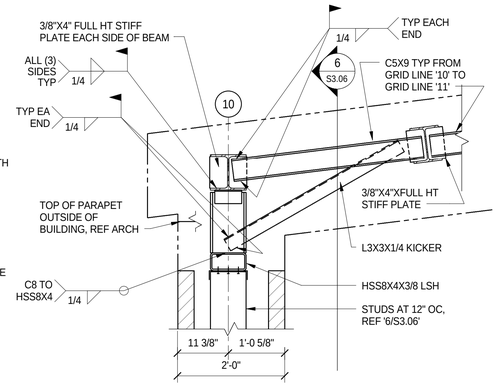

SECTION 2
3/4" = 1'-0"
S1.03 | S3.06

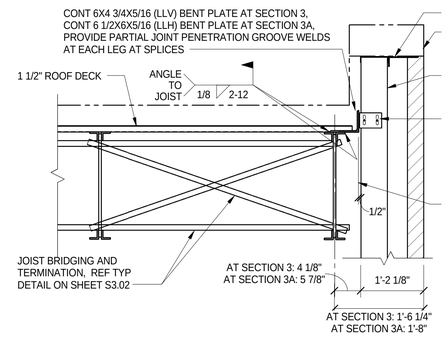

SECTION 3 | 3A
3/4" = 1'-0"
S1.02 | S3.06 | S1.02 | S3.06

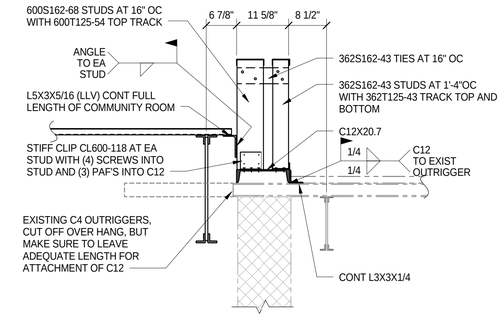

SECTION 4
3/4" = 1'-0"
S1.02 | S3.06

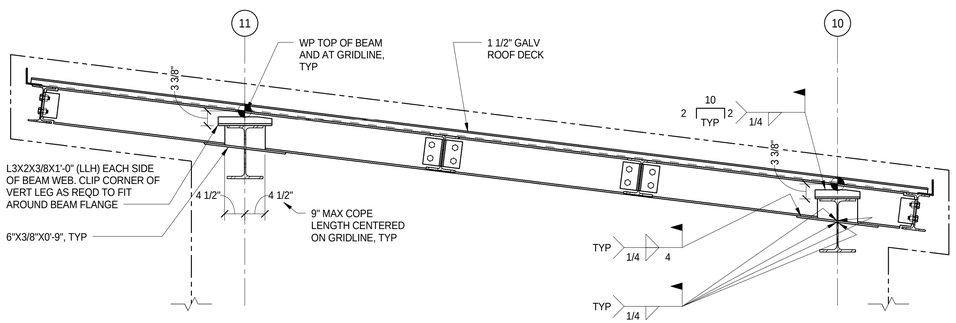

SECTION 5
3/4" = 1'-0"
S1.03 | S3.06

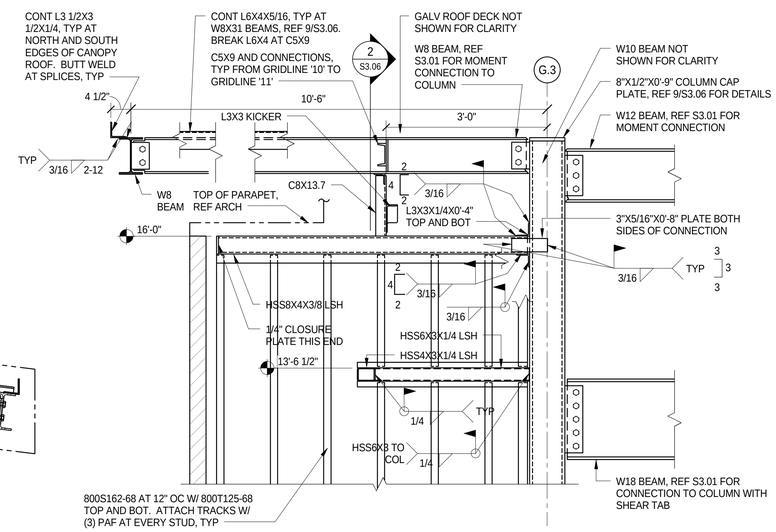

SECTION 6
3/4" = 1'-0"
S1.02 | S3.06

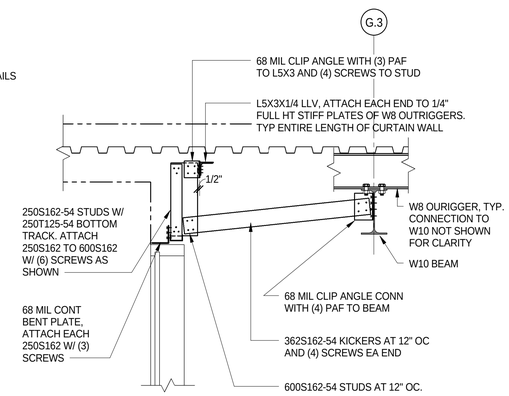

SECTION 7
3/4" = 1'-0"
S1.03 | S3.06

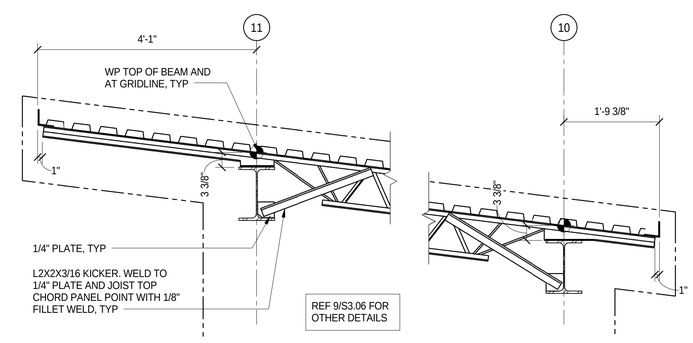

SECTION 8
3/4" = 1'-0"
S1.03 | S3.06

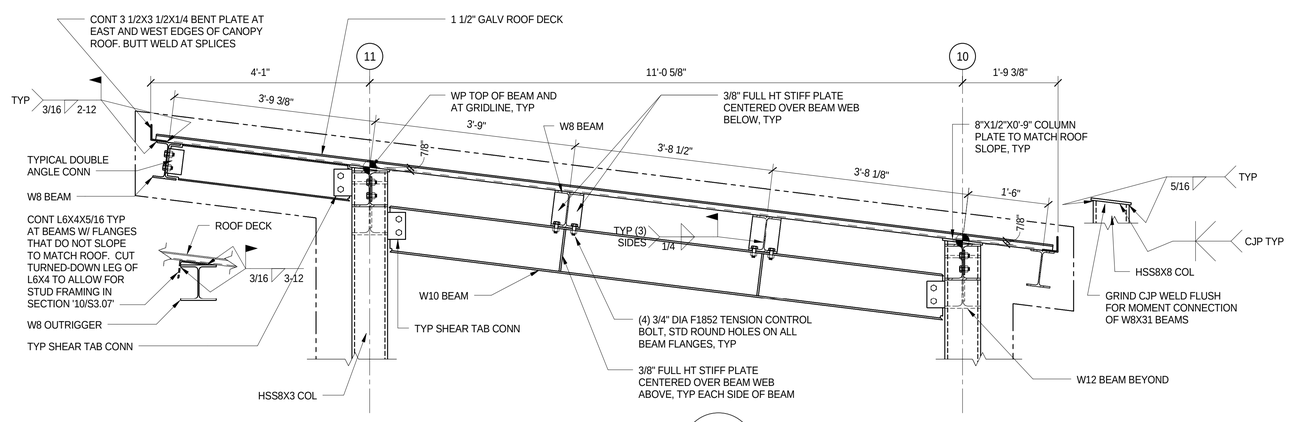

SECTION 9
3/4" = 1'-0"
S1.03 | S3.06

ENTEROS DESIGN
314 EXCHANGE ALLEY
PETERSBURG, VA 23804
804.861.1200 P
804.861.1253 F

All ideas, designs, arrangements and plans indicated or represented by this drawing are property of ENTEROS DESIGN, PC; created, evolved and developed for the sole use of this project. These ideas, design arrangements and/or plans shall not be used by or disclosed to any person, firm or corporation for any purpose without written permission from ENTEROS DESIGN, PC. Written dimensions on these drawings shall have precedence over scaled dimensions. Contractors shall verify and be responsible for all dimensions and conditions on the job. The Architect must be notified of any variations from the dimensions and conditions shown on these drawings.
c 2015 ENTEROS DESIGN, PC

DMWPV Consulting Structural Engineers
DUNBAR MILBY WILLIAMS PITTMAN & VAUGHAN, PLLC
CONSULTING STRUCTURAL ENGINEERS
1025 BOULDERS PARKWAY, SUITE 310
RICHMOND, VIRGINIA 23225-5549
PHONE (804) 323-0656 FAX: (804) 272-3916
DMWPV JOB No. 1504-38

WILLIAMSON ROAD LIBRARY

3837 Williamson Road, Roanoke, VA 24012

CONSTRUCTION DOCUMENTS

REVISIONS:

ROOF SECTIONS AND DETAILS

PROJ. NO.:1504-38 DRAWN BY:MKJ
4.13.16

COMMONWEALTH OF VIRGINIA
JEFFREY S. DAVIS
Lic. No. 026187
04/13/2016
PROFESSIONAL ENGINEER

S3.06

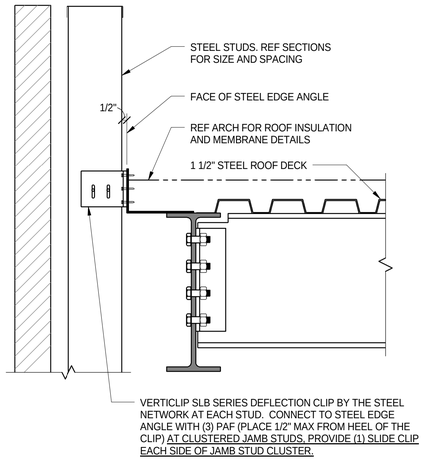

TYPICAL STEEL STUD SLIDE CLIP ANGLE CONNECTION TO ALLOW DEFLECTION

1 1/2"=1'-0"

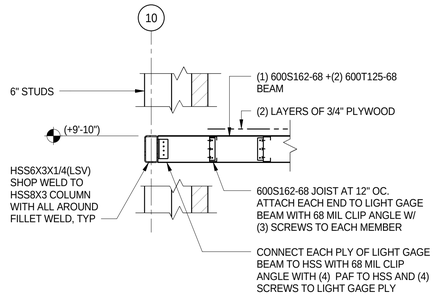

SECTION 1 — 3/4" = 1'-0" — S1.02 | S3.07

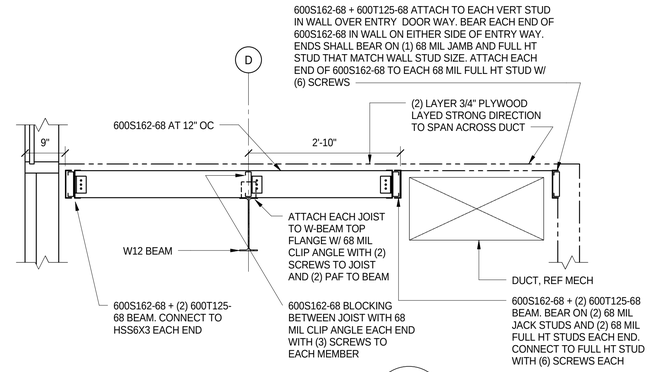

SECTION 2 — 3/4" = 1'-0" — S1.02 | S3.07

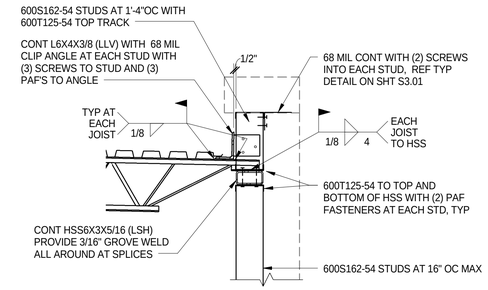

SECTION 3 — 3/4" = 1'-0" — S1.02 | S3.07

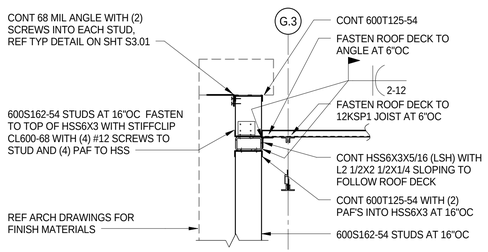

SECTION 4 — 3/4" = 1'-0" — S1.02 | S3.07

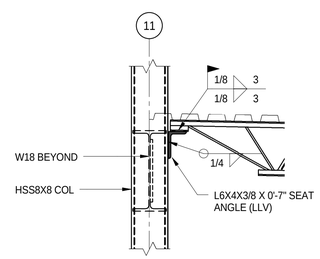

12KSP1 JOIST TO HSS COLUMN CONNECTION
APPLIES AT GRID 'D' AND 'G.3'

SECTION 5 — 3/4" = 1'-0" — S1.02 | S3.07

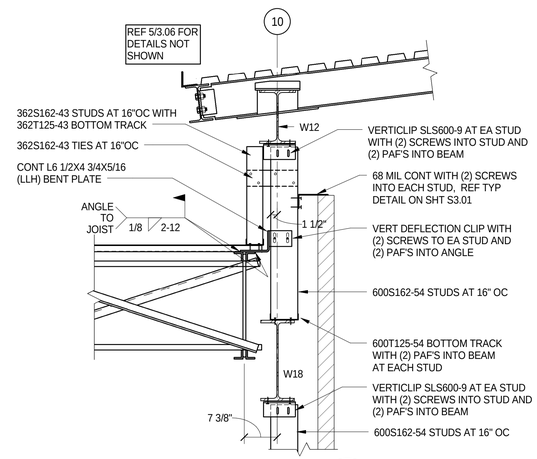

SECTION 6 — 3/4" = 1'-0" — S1.02 | S3.07

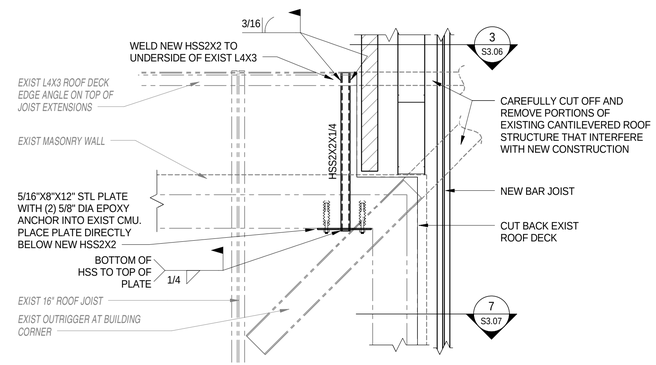

DETAIL A — 3/4" = 1'-0" — S1.02 | S3.07

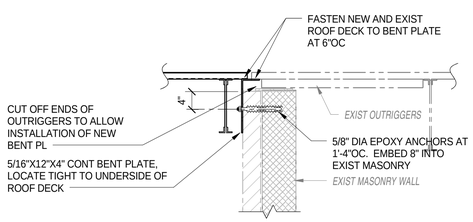

SECTION 7 — 3/4" = 1'-0" — S1.02 | S3.07

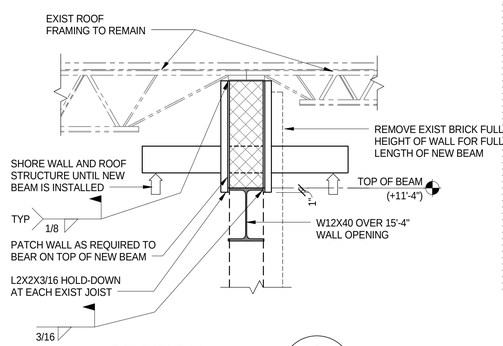

SECTION 8 — 3/4" = 1'-0" — S1.02 | S3.07

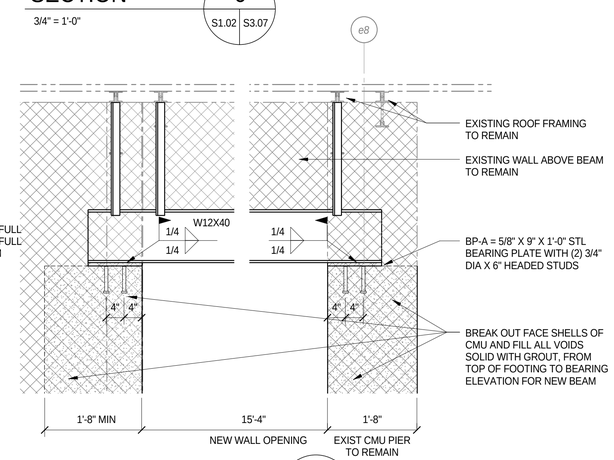

SECTION 9 — 3/4" = 1'-0" — S1.02 | S3.07

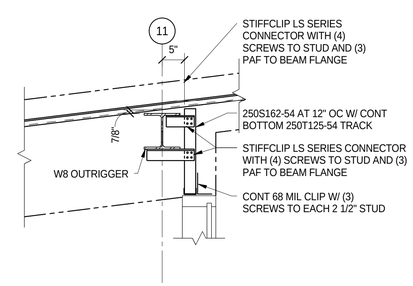

SECTION 10 — 3/4" = 1'-0" — S1.03 | S3.07

ENTEROS DESIGN
314 EXCHANGE ALLEY
PETERSBURG, VA 23804
804.861.1200 P
804.861.1253 F

All ideas, designs, arrangements and plans indicated or represented by this drawing are property of ENTEROS DESIGN, PC; created, evolved and developed for the sole use of this project. These ideas, design arrangements and/or plans shall not be used by or disclosed to any person, firm or corporation for any purpose without written permission from ENTEROS DESIGN, PC. Written dimensions on these drawings shall have precedence over scaled dimensions. Contractors shall verify and be responsible for all dimensions and conditions on the job. The Architect must be notified of any variations from the dimensions and conditions shown on these drawings.
c 2015 ENTEROS DESIGN, PC

DMWPV Consulting Structural Engineers
DUNBAR MILBY WILLIAMS PITTMAN & VAUGHAN, PLLC
CONSULTING STRUCTURAL ENGINEERS
1025 BOULDERS PARKWAY, SUITE 310
RICHMOND, VIRGINIA 23225-5549
PHONE (804) 323-0656 FAX: (804) 272-3916
DMWPV JOB No. 1504-38

WILLIAMSON ROAD LIBRARY

3837 Williamson Road, Roanoke, VA 24012

CONSTRUCTION DOCUMENTS

REVISIONS:

ROOF SECTIONS AND DETAILS

PROJ. NO.:1504-38 DRAWN BY:LDS
4.13.16

COMMONWEALTH OF VIRGINIA
JEFFREY S. DAVIS
Lic. No. 026187
04/13/2016
PROFESSIONAL ENGINEER

S3.07

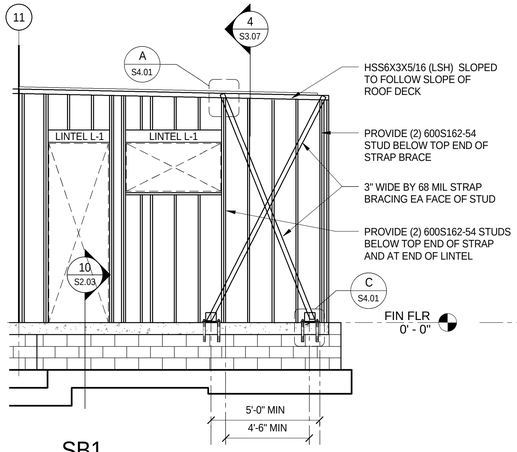

SB1 ELEVATION 1

1/4" = 1'-0"

S1.01 S4.01

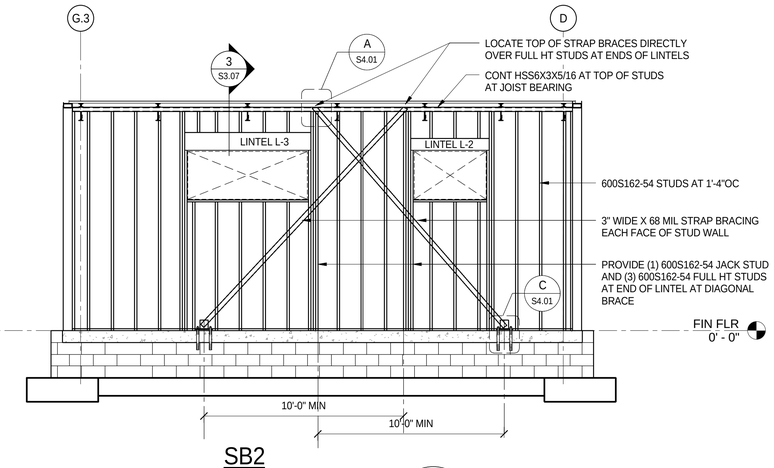

SB2 ELEVATION 2

1/4" = 1'-0"

S1.01 S4.01

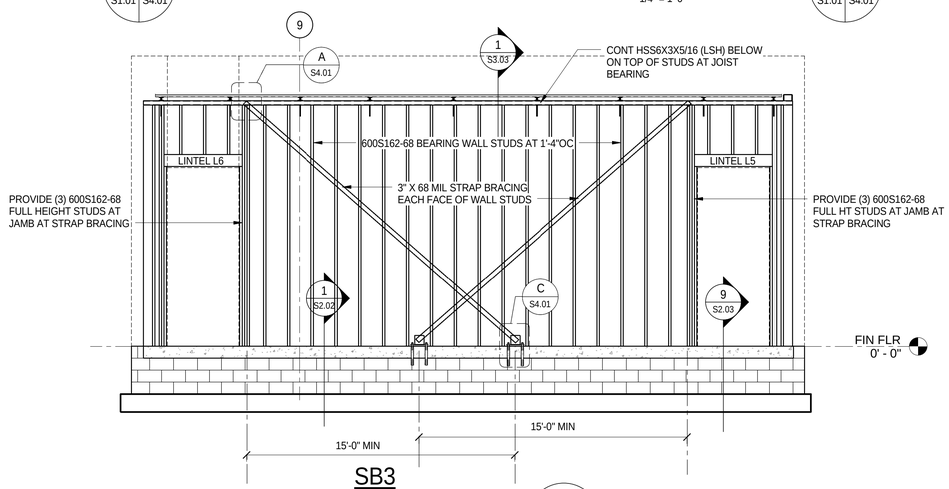

SB3 ELEVATION 3

1/4" = 1'-0"

S1.01 S4.01

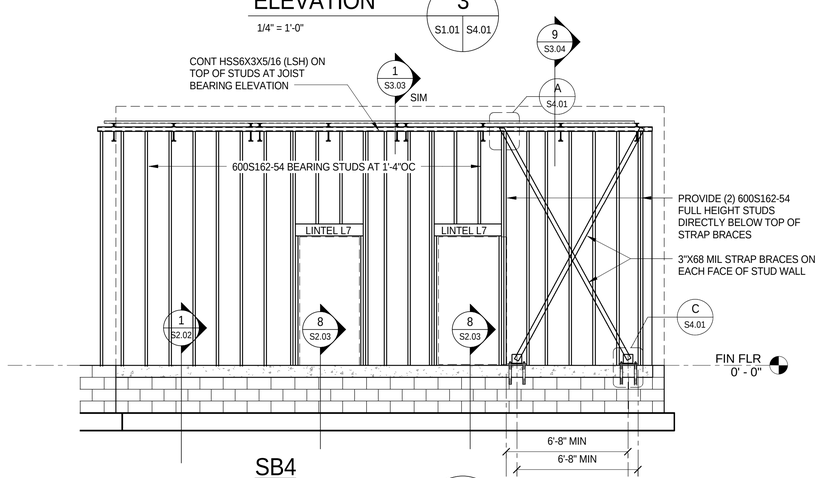

SB4 ELEVATION 4

1/4" = 1'-0"

S1.01 S4.01

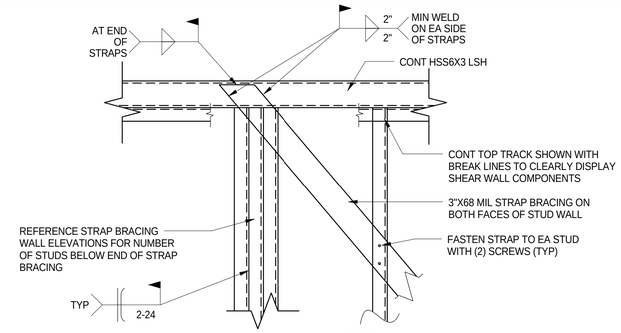

DETAIL A

1 1/2"=1'-0"

S4.01 S4.01

TYPICAL STRAP BRACING SPLICE DETAIL

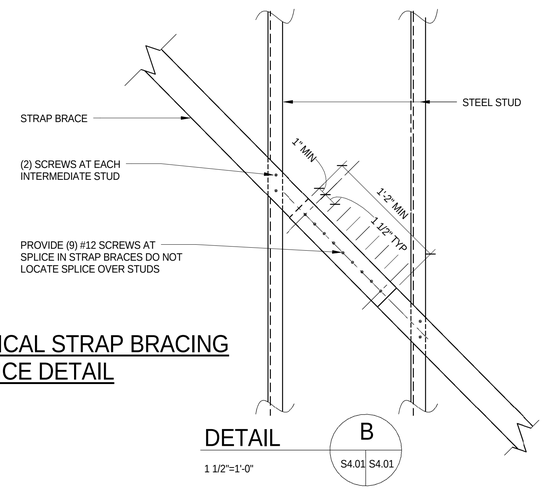

DETAIL B

1 1/2"=1'-0"

S4.01 S4.01

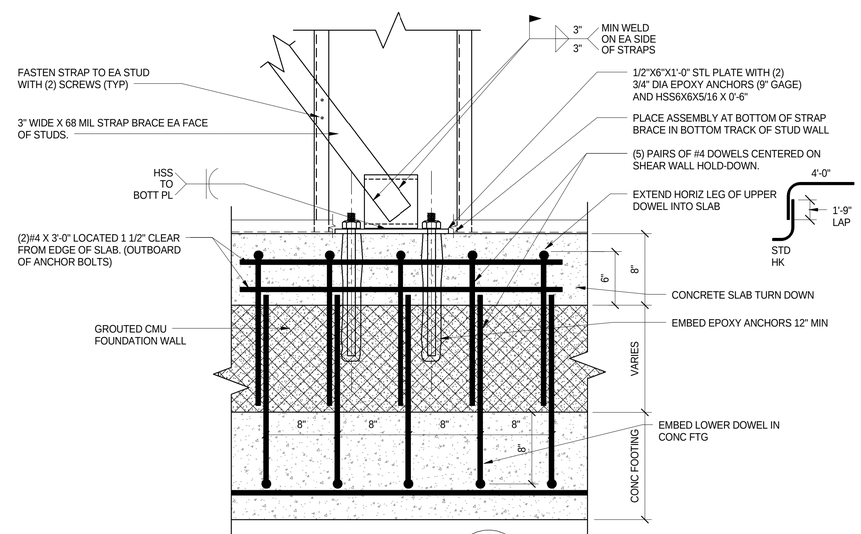

DETAIL C

1 1/2"=1'-0"

S4.01 S4.01

ENTEROS DESIGN

314 EXCHANGE ALLEY
PETERSBURG, VA 23804

804.861.1200 P
804.861.1253 F

All ideas, designs, arrangements and plans indicated or represented by this drawing are property of ENTEROS DESIGN, PC; created, evolved and developed for the sole use of this project. These ideas, design arrangements and/or plans shall not be used by or disclosed to any person, firm or corporation for any purpose without written permission from ENTEROS DESIGN, PC. Written dimensions on these drawings shall have precedence over scaled dimensions. Contractors shall verify and be responsible for all dimensions and conditions on the job. The Architect must be notified of any variations from the dimensions and conditions shown on these drawings.
c 2015 ENTEROS DESIGN, PC

DMWPV Consulting Structural Engineers

DUNBAR MILBY WILLIAMS PITTMAN & VAUGHAN, PLLC
CONSULTING STRUCTURAL ENGINEERS
1025 BOULDERS PARKWAY, SUITE 310
RICHMOND, VIRGINIA 23225-5549
PHONE (804) 323-0656 FAX: (804) 272-3916
DMWPV JOB No. 1504-38

WILLIAMSON ROAD LIBRARY

3837 Williamson Road, Roanoke, VA 24012

CONSTRUCTION DOCUMENTS

REVISIONS:

STRAPED BRACED WALL ELEVATIONS AND DETAILS

PROJ. NO.:1504-38 DRAWN BY:MKJ
4.13.16

COMMONWEALTH OF VIRGINIA
JEFFREY S. DAVIS
Lic. No. 026187
04/13/2016
PROFESSIONAL ENGINEER

S4.01

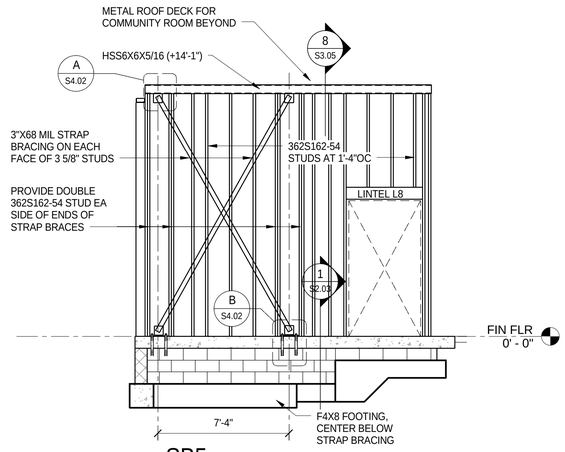

SB5 ELEVATION 5

1/4" = 1'-0" | S1.01 S4.02

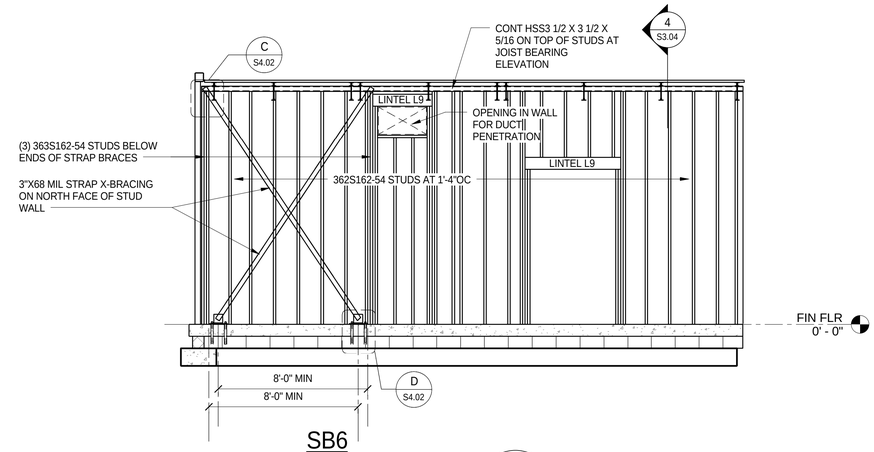

SB6 ELEVATION 6

1/4" = 1'-0" | S1.01 S4.02

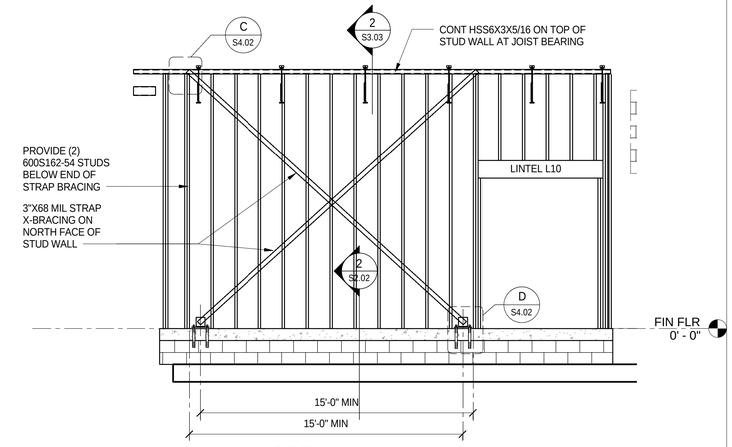

SB7 ELEVATION 7

1/4" = 1'-0" | S1.01 S4.02

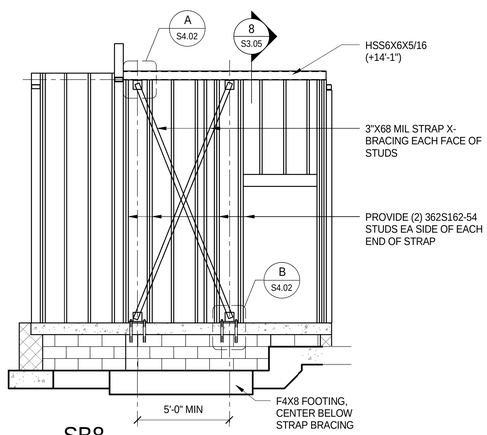

SB8 ELEVATION 8

1/4" = 1'-0" | S1.04 S4.02

ALTERNATE No. 6

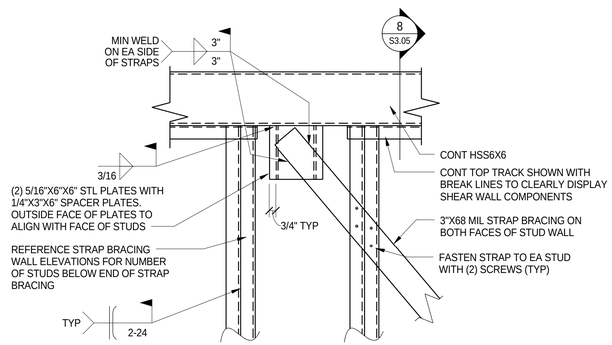

DETAIL A

1 1/2"=1'-0" | S4.02 S4.02

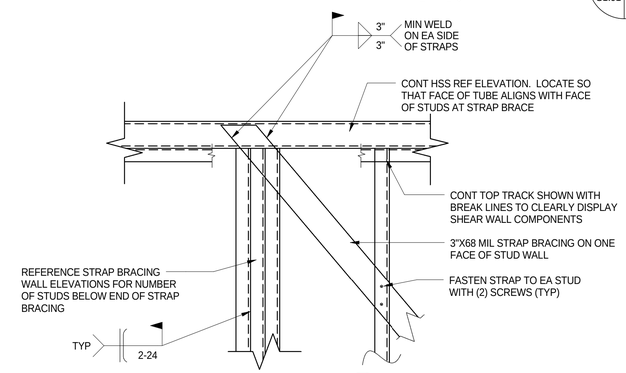

DETAIL C

1 1/2"=1'-0" | S4.02 S4.02

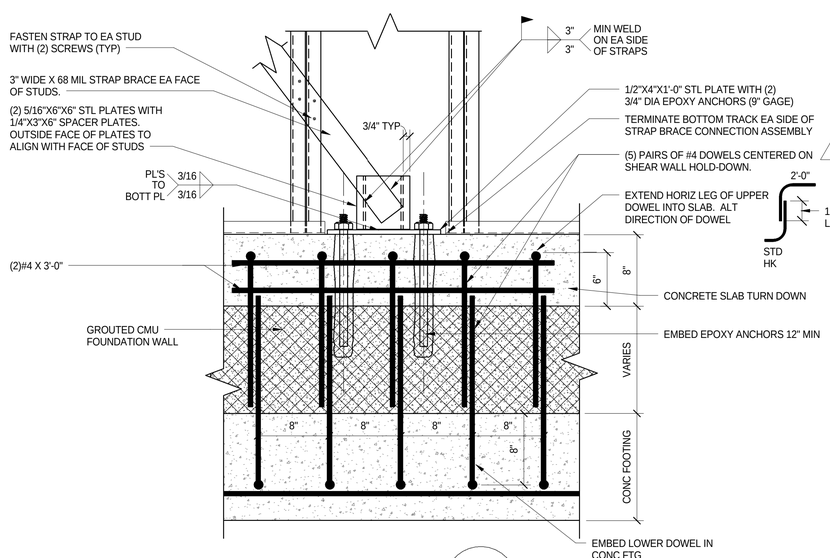

DETAIL B

1 1/2"=1'-0" | S4.02 S4.02

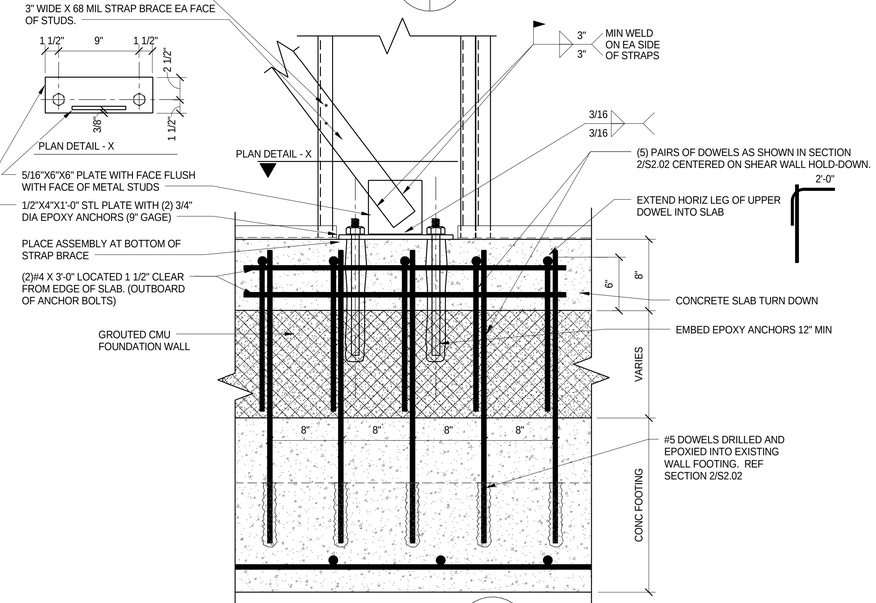

DETAIL D

1 1/2"=1'-0" | S4.02 S4.02

ENTEROS DESIGN

314 EXCHANGE ALLEY
PETERSBURG, VA 23804

804.861.1200 P
804.861.1253 F

All ideas, designs, arrangements and plans indicated or represented by this drawing are property of ENTEROS DESIGN, PC; created, evolved and developed for the sole use of this project. These ideas, design arrangements and/or plans shall not be used by or disclosed to any person, firm or corporation for any purpose without written permission from ENTEROS DESIGN, PC. Written dimensions on these drawings shall have precedence over scaled dimensions. Contractors shall verify and be responsible for all dimensions and conditions on the job. The Architect must be notified of any variations from the dimensions and conditions shown on these drawings.
c 2015 ENTEROS DESIGN, PC

DMW PV Consulting Structural Engineers

DUNBAR MILBY WILLIAMS PITTMAN & VAUGHAN, PLLC
CONSULTING STRUCTURAL ENGINEERS
1025 BOULDERS PARKWAY, SUITE 310
RICHMOND, VIRGINIA 23225-5549
PHONE (804) 323-0656 FAX: (804) 272-3916
DMWPV JOB No. 1504-38

WILLIAMSON ROAD LIBRARY

3837 Williamson Road, Roanoke, VA 24012

CONSTRUCTION DOCUMENTS

REVISIONS:

STRAPED BRACED WALL ELEVATIONS AND DETAILS

PROJ. NO.:1504-38 DRAWN BY:RKH
4.13.16

COMMONWEALTH OF VIRGINIA
JEFFREY S. DAVIS
Lic. No. 026187
04/13/2016
PROFESSIONAL ENGINEER

S4.02

COLD-FORMED STEEL BOXED HEADER SCHEDULE

MARK	UNPUNCHED STUD SECTIONS	TOP AND BOTTOM TRACK	SILL	JACK STUDS	FULL HT STUDS
L1	800S162-54	600T125-54	(1) 600T125-54	0	(2) 600S162-54
L2	800S162-54	600T125-54	(1) 600T125-54	(1) 600S162-54	(2) 600S162-54
L3	1200S162-68	600T125-54	(1) 600T125-54	(1) 600S162-54	(2) 600S162-54
L4	800S162-54	600T125-54	(1) 600T125-54	0	(2) 600S162-54
L5	800S162-54	600T125-54	(1) 600T125-54	(1) 600S162-68	(2) 600S162-68
L6	800S162-54	600T125-54	(1) 600T125-54	(1) 600S162-68	(2) 600S162-68
L7	800S162-54	600T125-54	(1) 600T125-54	(1) 600S162-54	(2) 600S162-54
L8	800S162-54	362T125-54	-	0	(1) 362S162-54
L9	800S162-54	362T125-54	(1) 362T125-54	(2) 362S162-54	(2) 362S162-54
L10	1200S162-68	600T125-54	(1) 600T125-54	(2) 600S162-54	(2) 600S162-54

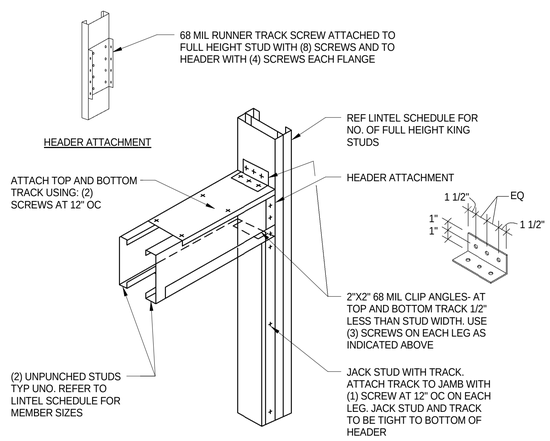

TYPICAL BOXED HEADER CONNECTION

HEADER AT TOP OF OPENINGS

LINTEL SCHEDULE

MARK	DESCRIPTION	CONFIGURATION	COMMENTS
L4 L5 L7	COLD FORMED STEEL BOXED HEADER - REF SCHEDULE + L5X5X5/16 GALV FOR BRICK VENEER COORD ELEV OF BOX HEADER WITH ROLLER SHADE BOX	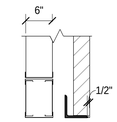	BEAR STL ANGLE 8" MIN EACH END ON BRICK
L9	COLD FORMED STEEL BOXED HEADER - REF SCHEDULE + (3) L5X3 1/2X5/16 (LLV) GALV	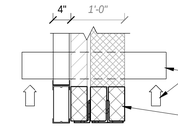	BEAR STL ANGLES 8" MIN EACH END ON SOLID GROUTED MASONRY SHORE EXISTING MASONRY AS REQUIRED REMOVE EXISTING MASONRY AS REQUIRED TO INSTALL NEW STEEL ANGLES. RE-BUILD MASONRY WITH 4" SOLID CMU. DO NOT ALTER EXISTING BOND BEAM AT TOP OF WALL
L10	COLD FORMED STEEL BOXED HEADER - REF SCHEDULE + W8X18 + 5/16" X 11" CONT BOTTOM PLATE	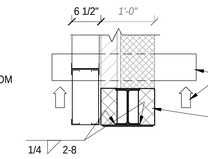	BEAR STEEL 8" MIN EACH END ON SOLID GROUTED MASONRY SHORE EXISTING MASONRY AS REQUIRED REMOVE EXISTING MASONRY AS REQUIRED TO INSTALL NEW STEEL LINTEL. RE-BUILD MASONRY WITH 4" SOLID CMU. DO NOT ALTER EXISTING BOND BEAM AT TOP OF WALL
L11	(3) L5X3 1/2X3/8 (LLV) GALV	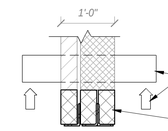	BEAR STL ANGLES 8" MIN EACH END ON SOLID GROUTED MASONRY SHORE EXISTING MASONRY AS REQUIRED REMOVE EXISTING MASONRY AS REQUIRED TO INSTALL NEW STEEL ANGLES. RE-BUILD MASONRY WITH 4" SOLID CMU. DO NOT ALTER EXISTING BOND BEAM AT TOP OF WALL
L12	(3) L3 1/2X3X3/8 (LLH) GALV REF 'L9' OR 'L10' AS APPLICABLE WHERE STUD WALL ADJACENT	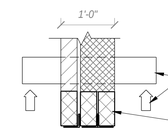	BEAR STL ANGLES 8" MIN EACH END ON SOLID GROUTED MASONRY SHORE EXISTING MASONRY AS REQUIRED REMOVE EXISTING MASONRY AS REQUIRED TO INSTALL NEW STEEL ANGLES. RE-BUILD MASONRY WITH 4" SOLID CMU. DO NOT ALTER EXISTING BOND BEAM AT TOP OF WALL

LINTEL SCHEDULE

1. ALL STEEL ANGLE LINTELS SHALL BE ASTM A36 STEEL. ALL W- SHAPES SHALL BE ASTM A992 STEEL.
2. ALL STEEL LINTELS IN EXTERIOR WALLS SHALL BE GALVANIZED.
3. BEAR ALL CMU BOND BEAMS AND STEEL LINTELS 8" ON SOLID MASONRY EACH END UNLESS NOTED OTHERWISE.
4. WHERE STEEL COLUMN DOES NOT ALLOW FULL 8" OF LINTEL BEARING, WELD LINTEL TO COLUMN WITH 3/16" FILLET WELD ALL AROUND, UNLESS NOTED OTHERWISE.
5. WHERE LINTELS BEAR PERPENDICULAR TO CAVITY WALLS, THE BEARING LENGTH BEGINS AT FACE OF CMU INSIDE CAVITY (REF "TYPICAL PLAN DETAIL AT BEARING PLATE" ON S....)
6. BOX SHAPED STEEL STUD LINTELS SHALL BE COMPRISED OF CONTINUOUS TRACKS AND STUD PIECES. NO SPLICES ARE ALLOWED. CONNECT PIECES OF BOX SHAPED LINTEL TOGETHER WITH NO. 10 SCREWS AT 12" OC. ALL LINTEL MEMBERS SHALL BE UNPUNCHED.
7. REFER TO PLANS FOR OTHER LINTEL LOCATIONS.
8. FOR LINTELS NOT INDICATED (SUCH AS THOSE REQUIRED FOR MECHANICAL DUCTS) USE A SIMILAR LINTEL TYPE INDICATED ABOVE FOR THE SIMILAR WALL TYPE AND SPAN LENGTH.
9. SHORE EXISTING WALLS AS REQD WHERE NEW LINTELS ARE TO BE INSTALLED WITHIN EXISTING WALLS.

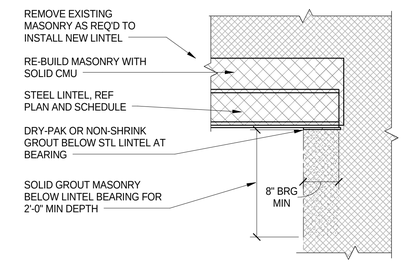

DETAIL AT BEARING OF STEEL LINTEL IN EXISTING MASONRY WALL

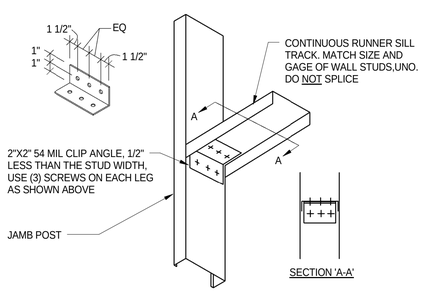

TYPICAL SILL CONNECTION

SILL CONNECTION USING SCREW ATTACHED CLIP ANGLE

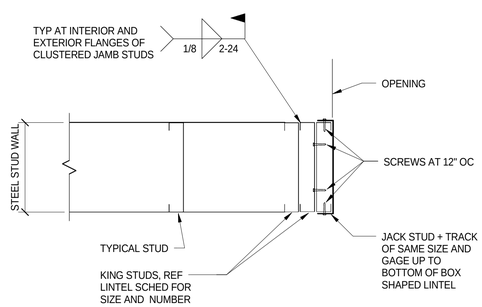

TYPICAL DETAIL AT EXTERIOR STEEL STUD WALL JAMB CONDITION

NO SCALE

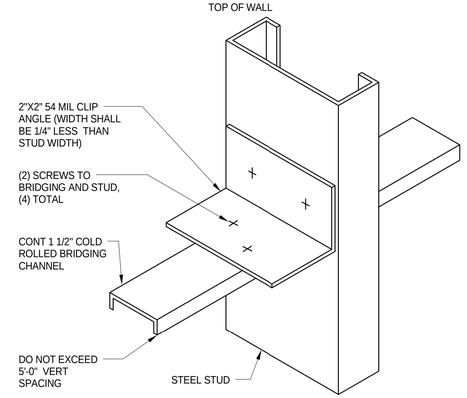

TYPICAL STEEL STUD WALL BRIDGING DETAIL (STUDS 3 5/8" DEEP OR LESS)

NO SCALE

NOTES:
1. APPLIES AT ALL EXTERIOR STEEL STUD WALLS.
2. APPLIES AT INTERIOR STEEL STUD BEARING WALLS.
3. APPLIES AT ALL INTERIOR STUD PARTITION WALLS THAT DO NOT HAVE SHEATHING ON EACH FACES.

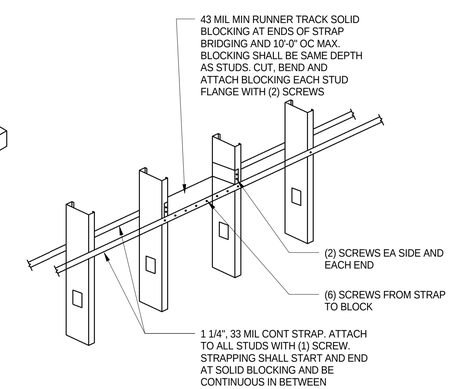

FLAT STRAP WALL STUD BRIDGING (REQD FOR ANY STUDS GREATER THAN 3 5/8" DEEP)

ENTEROS DESIGN
314 EXCHANGE ALLEY
PETERSBURG, VA 23804
804.861.1200 P
804.861.1253 F

All ideas, designs, arrangements and plans indicated or represented by this drawing are property of ENTEROS DESIGN, PC; created, evolved and developed for the sole use of this project. These ideas, design arrangements and/or plans shall not be used by or disclosed to any person, firm or corporation for any purpose without written permission from ENTEROS DESIGN, PC. Written dimensions on these drawings shall have precedence over scaled dimensions. Contractors shall verify and be responsible for all dimensions and conditions on the job. The Architect must be notified of any variations from the dimensions and conditions shown on these drawings.
c 2015 ENTEROS DESIGN, PC

DMWPV Consulting Structural Engineers
DUNBAR MILBY WILLIAMS PITTMAN & VAUGHAN, PLLC
CONSULTING STRUCTURAL ENGINEERS
1025 BOULDERS PARKWAY, SUITE 310
RICHMOND, VIRGINIA 23225-5549
PHONE (804) 323-0656 FAX: (804) 272-3916
DMWPV JOB No. 1504-38

WILLIAMSON ROAD LIBRARY
3837 Williamson Road, Roanoke, VA 24012

CONSTRUCTION DOCUMENTS

REVISIONS:

LINTELS

PROJ. NO.:1504-38 DRAWN BY:LDS
2.26.16

COMMONWEALTH OF VIRGINIA
JEFFREY S. DAVIS
Lic. No. 026187
04/13/2016
PROFESSIONAL ENGINEER

S5.01

PLUMBING FIXTURE SCHEDULE						
FIXTURE TYPE	DESCRIPTION	MOUNTING HEIGHT	COLD WATER, IN.	HOT WATER, IN.	WASTE, IN.	VENT, IN.
EWC-1	ELECTRIC WATER COOLER, BI-LEVEL (HC)	36 FLOOR TO SPOUT OUTLET LOWER UNIT	1/2"		2"	2"
L-1	LAVATORY, UNDERMOUNT, 0.5 GPM (CHILD HC)	COUNTER BY ARCHITECT	1/2"	1/2"	2"	2"
L-2	LAVATORY, WALL HUNG, 0.5 GPM (ADULT HC)	34 FLOOR TO RIM	1/2"	1/2"	2"	2"
L-3	LAVATORY, WALL HUNG, 0.5 GPM (CHILD HC)	31 FLOOR TO RIM	1/2"	1/2"	2"	2"
MS-1	MOP SINK, 24" x 24" SIZE, 10" DEEP	FLOOR	3/4"	3/4"	3"	2"
S-1	KITCHEN SINK, 1.5 GPM (HC)	COUNTER BY ARCHITECT	1/2"	1/2"	2"	2"
U-1	URINAL, .0125 GPF (HC)	17 FLOOR TO RIM	3/4"		2"	2"
WC-1	WATER CLOSET, WALL HUNG, 1.28 GPF	16 FLOOR TO RIM	1"		4"	2"
WC-2	WATER CLOSET, WALL HUNG, 1.28 GPF (ADULT HC)	18 FLOOR TO RIM	1"		4"	2"
WC-3	WATER CLOSET, FLOOR MTD, 1.28 GPF (ADULT HC)	18 FLOOR TO RIM	1"		4"	2"
WC-4	WATER CLOSET, FLOOR MTD, 1.28 GPF (CHILD HC)	16 FLOOR TO RIM	1"		4"	2"

DRAIN SCHEDULE							
TYPE	DRAIN TYPE	MANUFACTURER	MODEL	BODY TYPE	GRATE SIZE	GRATE FINISH / TYPE	CONNECTION SIZE
3"FD-A	GENERAL - FINISHED FLOOR	JOSAM	30000-A	CAST IRON	5"	NIKALOY	3"
3"FD-B	EQUIPMENT FLOOR DRAIN	JOSAM	32100-TG	CAST IRON	5"	CAST IRON/TRACTOR	3"
3"FD-C	OPEN SIGHT DRAIN	JOSAM	38420-60	CAST IRON	5"	CAST IRON/TRACTOR	3"

WATER HEATERS					
MARK	LOCATION	KW	VOLTAGE	HW CONNECTION	CW CONNECTION
EWH-1	115	6.0	208 V	3/4"	3/4"

GENERAL PLUMBING NOTES

1. REFER TO CIVIL DRAWINGS FOR THE EXTENT OF ALL PIPING ENTERING AND EXITING BUILDING.
2. UNDERGROUND SANITARY AND STORM SEWER PIPING EXITING THE BUILDING SHALL BE CAST IRON OR SCHEDULE 40 PVC TO AT LEAST 5'-0" OUTSIDE THE BUILDING WALL UNLESS INDICATED OTHERWISE.
3. MAKE PROPER H & CW, HWR, W, V, ETC. PIPING CONNECTIONS TO ALL FIXTURES AND EQUIPMENT EVEN THOUGH ALL BRANCH MAINS, ELBOWS AND CONNECTIONS ARE NOT SHOWN.
4. REFER TO ARCHITECTURAL WORKING DRAWINGS BEFORE ROUGHING-IN PLUMBING FIXTURES.
5. SLOPES AND INVERT ELEVATIONS OF SEWERS, MANHOLES, ETC., SHALL BE ESTABLISHED AND VERIFIED BY PLUMBING CONTRACTOR BEFORE ANY PIPING IS INSTALLED IN ORDER THAT PROPER SLOPES WILL BE MAINTAINED AND NECESSARY INVERT ELEVATIONS OBTAINED.
6. COORDINATE THE LOCATION OF ALL PIPING WITH LIGHTING FIXTURES, DUCT, GRILLES, HEATING, PIPING, ETC..
7. PROVIDE 1"CW CONNECTIONS TO FLUSH VALVE WC'S, 3/4" TO URINALS, 1/2"H & CW TO LAVS AND SINKS, 1/2"CW TO TO DRINKING FOUNTAINS AND 3/4"H & CW TO MOP SINKS.
8. PROVIDE 3/4"CW TO OUTSIDE SILLCOCKS AND 3/4"CW TO MECHANICAL ROOM HOSE BIBBS.
9. PROVIDE 1/8"x 4"x 20" STEEL PLATES FOR HOLDING SUPPORT BOLTS FOR WALL HANGERS ON LAVATORIES, URINALS AND WATER COOLERS, IN ADDITION TO SPECIFIED STRUCTURAL UPRIGHTS AND FLOOR MOUNTS. HANGER PLATES TO BE INSTALLED WITHIN WALL CONSTRUCTION BEHIND FIXTURES TO PREVENT MOVEMENT.
10. ALL FLOOR DRAINS SHALL HAVE STANDARD 3" SEAL, CAST IRON, "P" TRAPS UNLESS OTHERWISE NOTED. FLOOR DRAIN TRAP SEALS SUBJECT TO LOSS BY EVAPORATION SHALL BE EQUIPPED WITH TRAP PRIMERS OR TRAP GUARD INSERTS.
11. ALL CUTOFF VALVES, SHOCK ABSORBERS, ETC. SHALL BE ACCESSIBLE THROUGH AN ACCESS DOOR OR THROUGH LAY-IN CEILING. PROVIDE ACCESS DOOR WHERE REQUIRED.
12. WALL CLEANOUTS SHALL BE INSTALLED AT THE BASE OF ALL NEW RAIN CONDUCTORS AND SOIL OR WASTE STACKS WITH CLEANOUT PLUG NO MORE THAN 6" FROM FACE OF WALL. EXTEND PIPING TO CLEANOUT PLUG AS NECESSARY.
13. ALL SANITARY VENTS THRU ROOF SHALL BE LOCATED A MINIMUM DISTANCE OF 20 FEET FROM ANY HVAC UNIT AIR INTAKE OR INTAKE LOUVER.

PLUMBING LEGEND SYMBOLS AND ABBREVIATIONS

TYPICAL PIPING	TEE OR ELBOW FROM TOP OF MAIN	
TYPICAL PIPING – BRANCH FROM	TOP OF MAIN	
TYPICAL PIPING – BRANCH FROM	BOTTOM OF MAIN	
TYPICAL PIPING – BRANCH FROM	SIDE OF MAIN	
TYPICAL PIPING – RISER	IN PLAN	
TYPICAL PIPING – RISER	DIAGRAMMATIC	
COLD WATER		CW
HOT WATER		HW
HOT WATER RETURN		HWR
SANITARY SOIL & WASTE		
SANITARY VENT		
STORM SEWER		SD
SECONDARY STORM SEWER		SSD
DIRECTION OF SLOPE DOWN		
DIRECTION OF FLOW		
CUTOFF VALVE (IN PLAN)		
CUTOFF VALVE (IN VERTICAL)		CV
GLOBE VALVE		
CHECK VALVE		
BALANCING COCK		
GAS COCK		
BACKFLOW PREVENTER		BP
CONNECT TO EXISTING		
SHOCK ABSORBER		SA
STRAINER		
HANDICAPPED ACCESSIBLE FIXTURE		

AAV	- AIR ADMITTANCE VALVE	L	- LAVATORY
ABV	- ABOVE	MS	- MOP SINK
AD	- ACCESS DOOR	OD	- SECONDARY OVERFLOW DRAIN
BEL	- BELOW	OSD	- OPEN SITE DRAIN
BP	- BACKFLOW PREVENTER	PRV	- PRESSURE REDUCING VALVE
CI	- CAST IRON	PVC	- POLYVINYL CHLORIDE
CIB	- CAST IRON BOOT	P&T	- PRESSURE & TEMPERATURE RELIEF VALVE
CO	- CLEANOUT	RC	- RAIN CONDUCTOR
CONC	- CONCRETE	RD	- ROOF DRAIN
CV	- CUTOFF VALVE	SA	- SHOCK ABSORBER
CW	- COLD WATER	SAN	- SANITARY
DI	- DUCTILE IRON	SC	- SILL COCK
DN	- DOWN	SD	- STORM SEWER
DFU	- DRAINAGE FIXTURE UNIT	SF	- SQUARE FEET
EL	- ELEVATION	SS	- SOIL STACK
EWC	- ELECTRIC WATER COOLER	SSD	- SECONDARY STORM SEWER
EWH	- ELECTRIC WATER HEATER	SV	- STACK VENT
FD	- FLOOR DRAIN	U	- URINAL
FL	- FLOOR	V	- VENT
HB	- HOSE BIBB	VS	- VENT STACK
HW	- HOT WATER	VTR	- VENT-THRU-ROOF
HWR	- HOT WATER RETURN	W	- WASTE
IMB	- ICE MAKER BOX	WC	- WATER CLOSET
INV	- INVERT	WS	- WASTE STACK
		WSV	- WASTE STACK VENT

IDENTIFICATION KEY

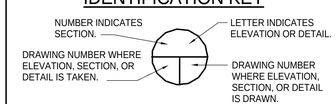

SECTION, ELEVATION, OR DETAIL SYMBOL

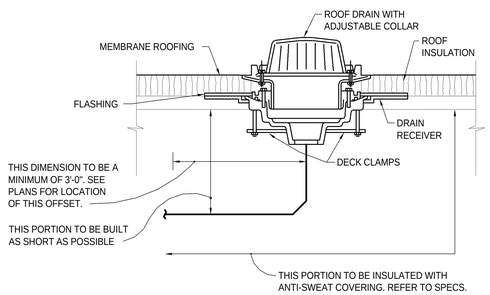

DETAIL OF CONNECTIONS TO PRIMARY ROOF DRAINS

NO SCALE

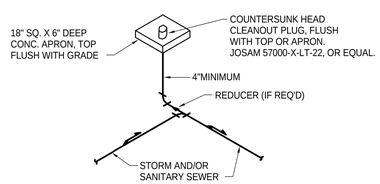

DETAIL OF CLEANOUTS IN OUTSIDE STORM AND SANITARY SEWER

NO SCALE

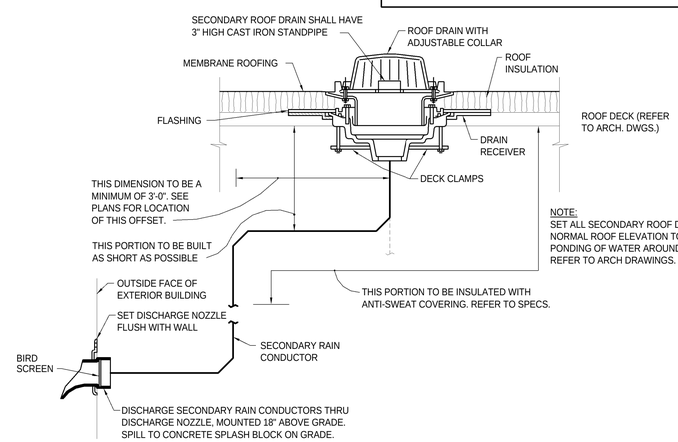

DETAIL OF CONNECTIONS TO SECONDARY ROOF DRAINS

NO SCALE

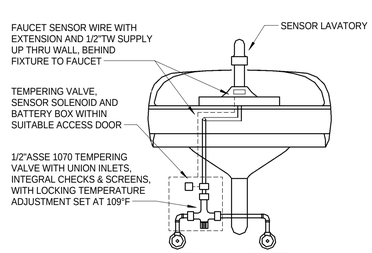

NOTE: TYPICAL INSTALLATION FOR ALL LAVATORIES, ONLY WALL HUNG TYPE SHOWN.

SENSOR LAVATORY CONNECTION DETAIL

NO SCALE

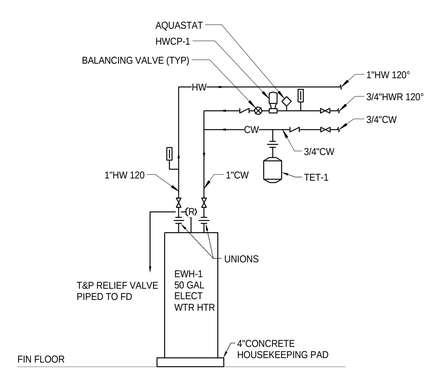

CONNECTIONS TO ELECTRIC WATER HEATER (EWH-1)

NO SCALE

ENTEROS DESIGN

314 EXCHANGE ALLEY
PETERSBURG, VA 23804

804.861.1200 P
804.861.1253 F

All ideas, designs, arrangements and plans indicated or represented by this drawing are property of ENTEROS DESIGN, PC; created, evolved and developed for the sole use of this project. These ideas, design arrangements and/or plans shall not be used by or disclosed to any person, firm or corporation for any purpose without written permission from ENTEROS DESIGN, PC. Written dimensions on these drawings shall have precedence over scaled dimensions. Contractors shall verify and be responsible for all dimensions and conditions on the job. The Architect must be notified of any variations from the dimensions and conditions shown on these drawings.
c 2016 ENTEROS DESIGN, PC

ASCENT ENGINEERING GROUP

4932 FRONTAGE ROAD NW
ROANOKE, VIRGINIA 24019
(540) 265-4444

D: SAT 15130 C:RWD

WILLIAMSON ROAD LIBRARY

3837 Williamson Road, Roanoke, VA 24012

CONSTRUCTION DOCUMENTS

REVISIONS:

PLUMBING LEGEND, SCHEDULES, NOTES & DETAILS

PROJ. NO.:156003 DRAWN BY:--
04.13.16

COMMONWEALTH OF VIRGINIA
DAVID L. ROLLER
Lic. No. 036362
4-13-2016
PROFESSIONAL ENGINEER

P0.01

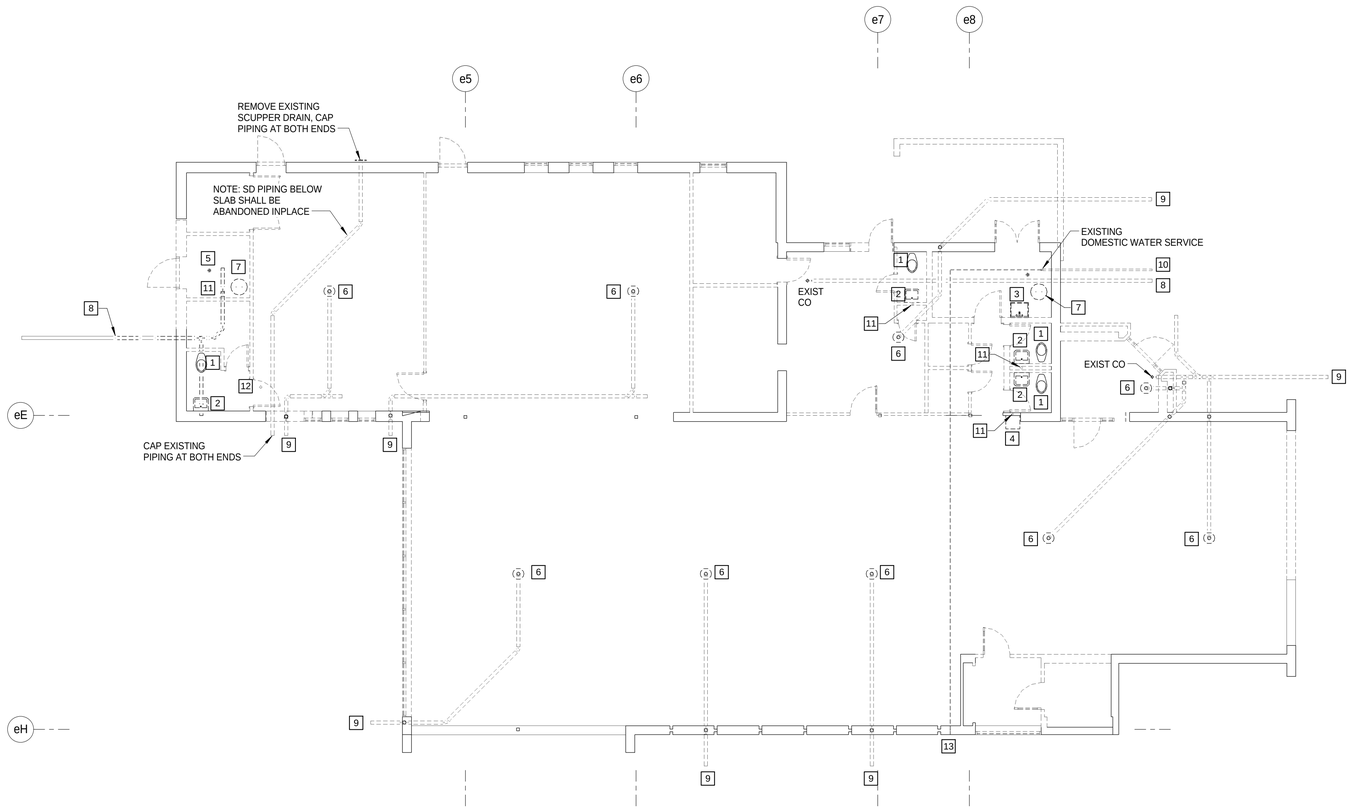

1 P1.01 FIRST FLOOR PLUMBING DEMOLITION PLAN
1/8" = 1'-0"

GENERAL DEMOLITION NOTES:

1. CONTRACTOR SHALL FIELD VERIFY ALL EXISTING CONDITIONS PRIOR TO STARTING DEMOLITION. RESPONSIBILITY IS TO CONFIRM ALL EXISTING POINTS OF CONNECTION, FIELD VERIFY EXISTING PIPE SIZES, INVERTS, FIXTURE LOCATIONS AND REPORTING ANY DEFICIENCIES TO THE ARCHITECT/ENGINEER.
2. REMOVE EXISTING PLUMBING FIXTURES AND PLUMBING EQUIPMENT THROUGHOUT THE ENTIRE BUILDING, TO INCLUDE WATER SUPPLY, SANITARY WASTE, VENT AND STORM PIPING, TRIM, SUPPLY, WASTE AND VENT SERVICES TO FIXTURES. CAP OR PLUG EXISTING PIPING BELOW FLOOR, BEHIND WALL OR ABOVE CEILING WITHIN 5 FEET OF CONNECTED PIPE MAINS PRIOR TO INSTALLATION OF NEW ARCHITECTURAL FINISHES. TURN EXISTING WATER HEATERS AND EQUIPMENT, FIXTURES, FLUSH VALVES AND FAUCETS OVER TO OWNER IN GOOD WORKING CONDITION.

PLUMBING DEMOLITION NOTES:

1. REMOVE EXISTING WATER CLOSET, FLUSH VALVE, WASTE, VENT AND WATER PIPING, ALL ASSOCIATED TRIM.
2. REMOVE EXISTING LAVATORY, FAUCET, WASTE, VENT AND WATER PIPING, ALL ASSOCIATED TRIM AND CARRIER.
3. REMOVE EXISTING MOP SINK, FAUCET, WASTE, VENT AND WATER PIPING, ALL ASSOCIATED TRIM AND MOP ACCESSORIES.
4. REMOVE EXISTING DRINKING FOUNTAIN, WASTE, VENT AND WATER PIPING, ASSOCIATED WALL HANGER.
5. REMOVE EXISTING FLOOR DRAIN STRAINER. PLUG AND CAP ASSOCIATED BELOW SLAB SANITARY PIPING AT BOTH ENDS AND ABANDON IN PLACE.
6. REMOVE EXISTING ROOF DRAIN, DECK CLAMP AND ASSOCIATED STORM DRAIN PIPING. CAP EXISTING RAIN CONDUCTOR AT EXTERIOR WALL AND ABANDON IN PLACE.
7. REMOVE EXISTING DOMESTIC WATER HEATING EQUIPMENT AND TURN OVER TO OWNER IN GOOD WORKING ORDER.
8. REMOVE PORTION OF EXTERIOR SANITARY PIPING BELOW GRADE AND PREPARE FOR NEW CONNECTION BY SITE UTILITY CONTRACTOR.
9. REMOVE PORTION OF EXTERIOR STORM DRAIN PIPING BELOW GRADE AND PREPARE FOR NEW CONNECTION BY SITE UTILITY CONTRACTOR. VERTICAL PORTION OF EXISTING STORM DRAIN SHALL BE ABANDONDED WITHIN EXTERIOR WALL.
10. REMOVE PORTION OF EXTERIOR DOMESTIC WATER PIPING BELOW GRADE AND PREPARE FOR NEW CONNECTION BY SITE UTILITY CONTRACTOR.
11. REMOVE EXISTING VENT THROUGH ROOF AND ASSOCIATED VENT PIPING.
12. PREPARE EXISTING VENT THROUGH ROOF FOR NEW CONNECTION. REMOVE EXISTING VENT PIPING TO FIXTURES BEING REMOVED AS INDICATED.
13. REMOVE EXISTING SILLCOCK THROUGH WALL AND ASSOCIATED PIPING.

ENTEROS DESIGN
314 EXCHANGE ALLEY
PETERSBURG, VA 23804
804.861.1200 P
804.861.1253 F

All ideas, designs, arrangements and plans indicated or represented by this drawing are property of ENTEROS DESIGN, PC; created, evolved and developed for the sole use of this project. These ideas, design arrangements and/or plans shall not be used by or disclosed to any person, firm or corporation for any purpose without written permission from ENTEROS DESIGN, PC. Written dimensions on these drawings shall have precedence over scaled dimensions. Contractors shall verify and be responsible for all dimensions and conditions on the job. The Architect must be notified of any variations from the dimensions and conditions shown on these drawings.
c 2016 ENTEROS DESIGN, PC

ASCENT ENGINEERING GROUP
4932 FRONTAGE ROAD NW
ROANOKE, VIRGINIA 24019
(540) 265-4444

D: SAT 15130 C:RWD

WILLIAMSON ROAD LIBRARY

3837 Williamson Road, Roanoke, VA 24012

CONSTRUCTION DOCUMENTS

REVISIONS:

PLUMBING FIRST FLOOR DEMOLITION PLAN

PROJ. NO.:156003 DRAWN BY:Author
04.13.16

COMMONWEALTH OF VIRGINIA
DAVID L. ROLLER
Lic. No. 036362
4-13-2016
PROFESSIONAL ENGINEER

NORTH

P1.01

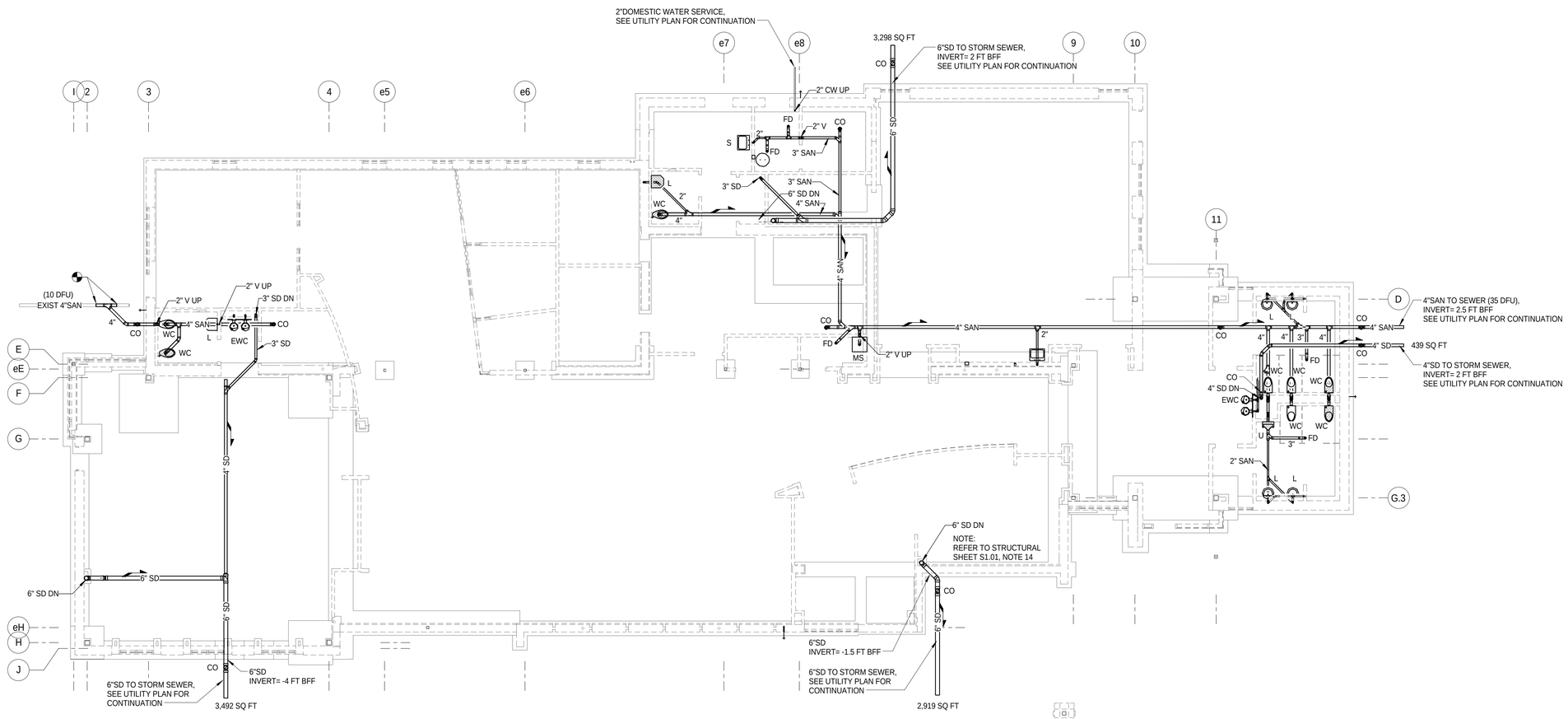

1 P2.01 FOUNDATION PLAN
1/8" = 1'-0"

ENTEROS DESIGN
314 EXCHANGE ALLEY
PETERSBURG, VA 23804
804.861.1200 P
804.861.1253 F

All ideas, designs, arrangements and plans indicated or represented by this drawing are property of ENTEROS DESIGN, PC; created, evolved and developed for the sole use of this project. These ideas, design arrangements and/or plans shall not be used by or disclosed to any person, firm or corporation for any purpose without written permission from ENTEROS DESIGN, PC. Written dimensions on these drawings shall have precedence over scaled dimensions. Contractors shall verify and be responsible for all dimensions and conditions on the job. The Architect must be notified of any variations from the dimensions and conditions shown on these drawings.
c 2016 ENTEROS DESIGN, PC

ASCENT ENGINEERING GROUP
4932 FRONTAGE ROAD NW
ROANOKE, VIRGINIA 24019
(540) 265-4444

D: SAT 15130 C:RWD

WILLIAMSON ROAD LIBRARY

3837 Williamson Road, Roanoke, VA 24012

CONSTRUCTION DOCUMENTS

REVISIONS:

PLUMBING FOUNDATION PLAN

PROJ. NO.:156003 DRAWN BY:Author
04.13.16

COMMONWEALTH OF VIRGINIA
DAVID L. ROLLER
Lic. No. 036362
4-13-2016
PROFESSIONAL ENGINEER

NORTH

P2.01

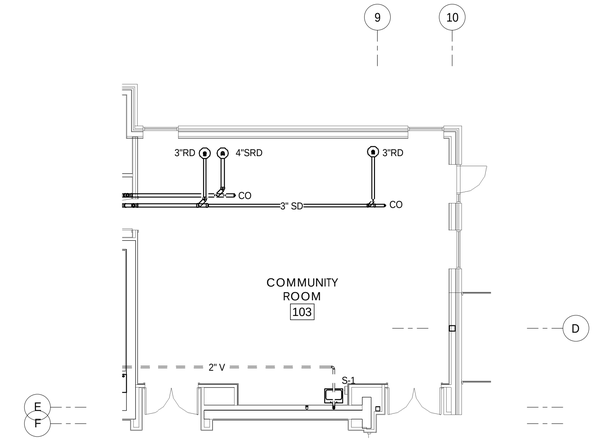

2 P2.02 PARTIAL FIRST FLOOR SANITARY PLAN ALTERNATE #6
1/8" = 1'-0"

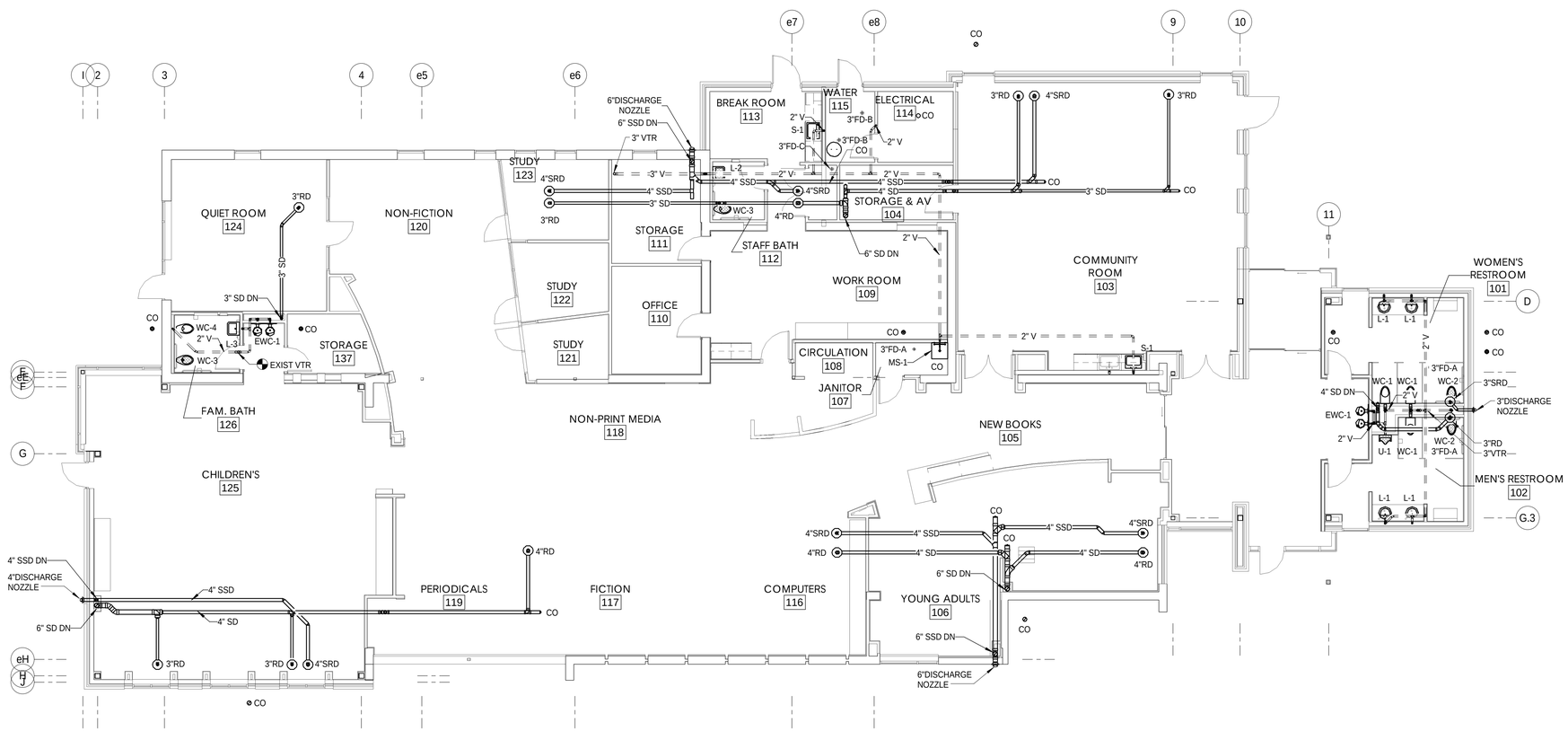

1 P2.02 FIRST FLOOR SANITARY PLAN
1/8" = 1'-0"

GENERAL NOTES:

1. CONTRACTOR SHALL FIELD VERIFY ALL EXISTING CONDITIONS PRIOR TO STARTING NEW WORK. RESPONSIBILITY IS TO CONFIRM ALL POINTS OF CONNECTION, EQUIPMENT AND FIXTURE LOCATIONS.

ENTEROS DESIGN

314 EXCHANGE ALLEY
PETERSBURG, VA 23804

804.861.1200 P
804.861.1253 F

All ideas, designs, arrangements and plans indicated or represented by this drawing are property of ENTEROS DESIGN, PC; created, evolved and developed for the sole use of this project. These ideas, design arrangements and/or plans shall not be used by or disclosed to any person, firm or corporation for any purpose without written permission from ENTEROS DESIGN, PC. Written dimensions on these drawings shall have precedence over scaled dimensions. Contractors shall verify and be responsible for all dimensions and conditions on the job. The Architect must be notified of any variations from the dimensions and conditions shown on these drawings.
c 2016 ENTEROS DESIGN, PC

ASCENT ENGINEERING GROUP

4932 FRONTAGE ROAD NW
ROANOKE, VIRGINIA 24019
(540) 265-4444

D: SAT 15130 C:RWD

WILLIAMSON ROAD LIBRARY

3837 Williamson Road, Roanoke, VA 24012

CONSTRUCTION DOCUMENTS

REVISIONS:

PLUMBING FIRST FLOOR SANITARY PLAN

PROJ. NO.:156003 DRAWN BY:Author
04.13.16

COMMONWEALTH OF VIRGINIA
DAVID L. ROLLER
Lic. No. 036362
4-13-2016
PROFESSIONAL ENGINEER

NORTH

P2.02

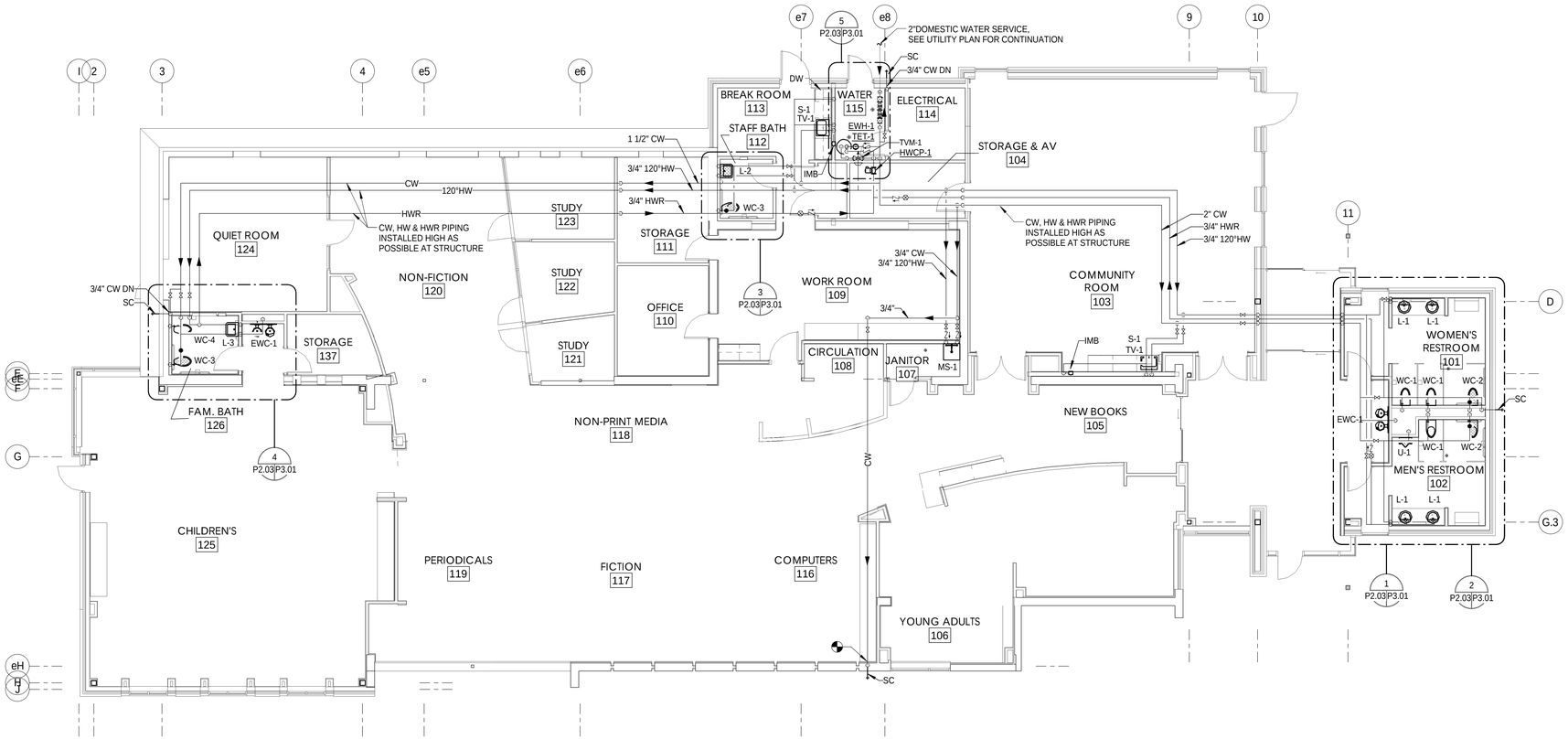

1 P2.03 FIRST FLOOR DOMESTIC WATER PLAN
1/8" = 1'-0"

GENERAL NOTES:

1. CONTRACTOR SHALL FIELD VERIFY ALL EXISTING CONDITIONS PRIOR TO STARTING NEW WORK. RESPONSIBILITY IS TO CONFIRM ALL POINTS OF CONNECTION, EQUIPMENT AND FIXTURE LOCATIONS.

ENTEROS DESIGN

314 EXCHANGE ALLEY
PETERSBURG, VA 23804

804.861.1200 P
804.861.1253 F

All ideas, designs, arrangements and plans indicated or represented by this drawing are property of ENTEROS DESIGN, PC; created, evolved and developed for the sole use of this project. These ideas, design arrangements and/or plans shall not be used by or disclosed to any person, firm or corporation for any purpose without written permission from ENTEROS DESIGN, PC. Written dimensions on these drawings shall have precedence over scaled dimensions. Contractors shall verify and be responsible for all dimensions and conditions on the job. The Architect must be notified of any variations from the dimensions and conditions shown on these drawings.
c 2016 ENTEROS DESIGN, PC

ASCENT ENGINEERING GROUP

4932 FRONTAGE ROAD NW
ROANOKE, VIRGINIA 24019
(540) 265-4444

D: SAT 15130 C:RWD

WILLIAMSON ROAD LIBRARY

3837 Williamson Road, Roanoke, VA 24012

CONSTRUCTION DOCUMENTS

REVISIONS:

PLUMBING FIRST FLOOR DOMESTIC WATER PLAN

PROJ. NO.:156003 DRAWN BY:Author
04.13.16

COMMONWEALTH OF VIRGINIA
DAVID L. ROLLER
Lic. No. 036362
4-13-2016
PROFESSIONAL ENGINEER

NORTH

P2.03

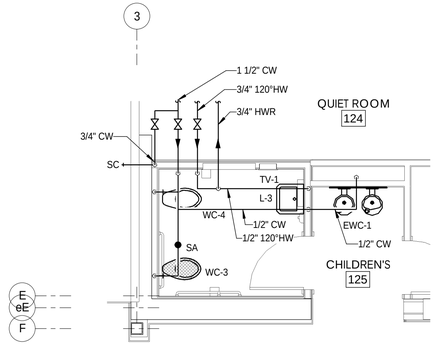

4 P3.01 ENLARGED FIRST FLOOR 129 DOMESTIC WATER PLAN
1/4" = 1'-0"

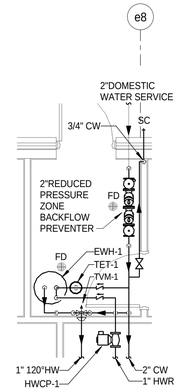

5 P3.01 ENLARGED FIRST FLOOR 117 MECHANICAL ROOM PLAN
1/4" = 1'-0"

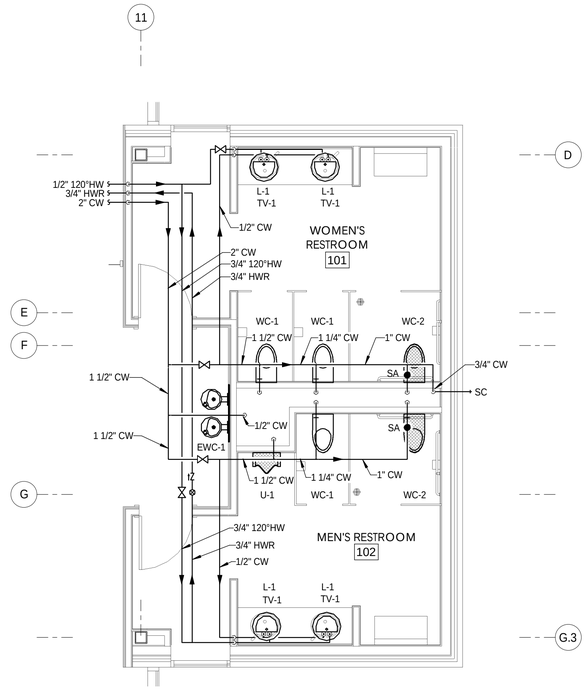

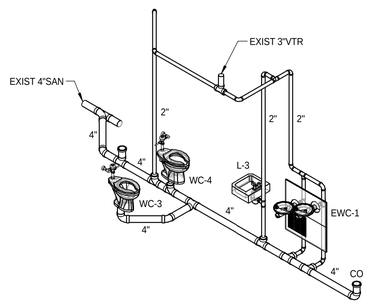

8 P3.01 SANITARY WASTE AND VENT RISER DIAGRAM 2

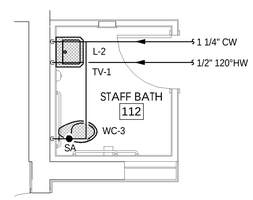

3 P3.01 ENLARGED FIRST FLOOR 113 DOMESTIC WATER PLAN
1/4" = 1'-0"

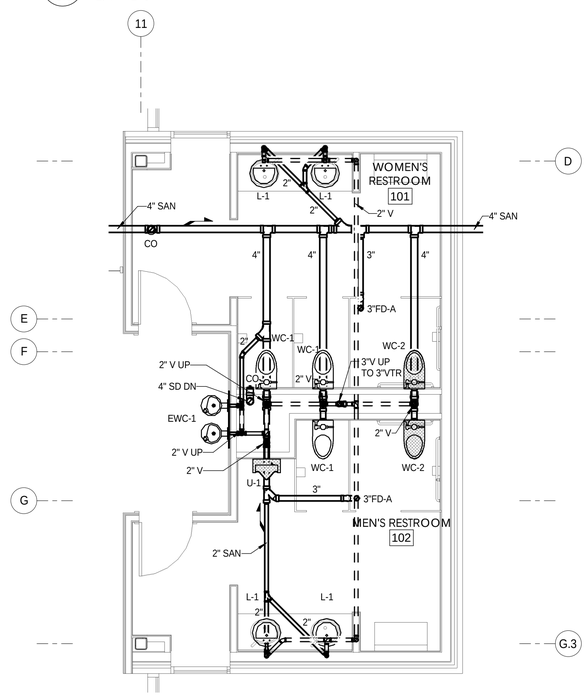

1 P3.01 ENLARGED FIRST FLOOR 101 & 102 DOMESTIC WATER PLAN
1/4" = 1'-0"

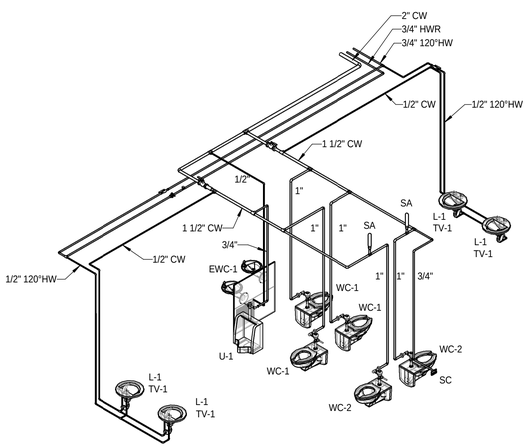

6 P3.01 DOMESTIC WATER RISER DIAGRAM

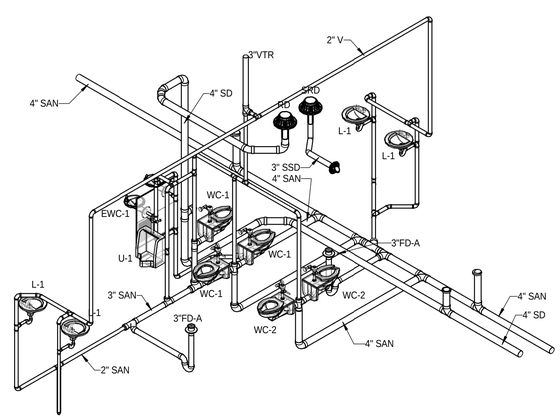

7 P3.01 SANITARY WASTE AND VENT RISER DIAGRAM

2 P3.01 ENLARGED FIRST FLOOR 101 & 102 SANITARY PLAN
1/4" = 1'-0"

ENTEROS DESIGN

314 EXCHANGE ALLEY
PETERSBURG, VA 23804

804.861.1200 P
804.861.1253 F

All ideas, designs, arrangements and plans indicated or represented by this drawing are property of ENTEROS DESIGN, PC; created, evolved and developed for the sole use of this project. These ideas, design arrangements and/or plans shall not be used by or disclosed to any person, firm or corporation for any purpose without written permission from ENTEROS DESIGN, PC. Written dimensions on these drawings shall have precedence over scaled dimensions. Contractors shall verify and be responsible for all dimensions and conditions on the job. The Architect must be notified of any variations from the dimensions and conditions shown on these drawings.
c 2016 ENTEROS DESIGN, PC

ASCENT
ENGINEERING GROUP

4932 FRONTAGE ROAD NW
ROANOKE, VIRGINIA 24019
(540) 265-4444

D: SAT 15130 C:RWD

WILLIAMSON ROAD LIBRARY

3837 Williamson Road, Roanoke, VA 24012

CONSTRUCTION DOCUMENTS

REVISIONS:

PLUMBING ENLARGED TOILET PLANS

PROJ. NO.:156003 DRAWN BY:Author
04.13.16

COMMONWEALTH OF VIRGINIA
DAVID L. ROLLER
Lic. No. 036362
4-13-2016
PROFESSIONAL ENGINEER

NORTH

P3.01

WALL HEATERS							
MARK	MANUFACTURER	HEATING CAPACITY, KW	HEATING CAPACITY, MBH	MODEL NO.	REMARKS	VOLTAGE, V	QUANTITY
WH-1	MARKEL	2	6.8	3452	RECESSED	208	5

VARIABLE VOLUME HEATING BOXES (PRICE)							
MARK	BOX INLET SIZE	P.D. AT COOLING AIRFLOW (IN. H2O.)	PRIMARY AIRFLOW, MAX CFM	PRIMARY AIRFLOW, HI MIN CFM	PRIMARY AIR LO MIN CFM	HEATING CAPACITY, W	RADIATED NC, MAX
VV-101	5"	0.01	265	135	135	1,500	20
VV-102	5"	0.01	240	240	120	3,000	20
VV-103	5"	0.01	210	105	105	1,500	20
VV-104	5"	0.01	270	175	135	2,000	20
VV-105	5"	0.01	350	175	120	2,500	20

VENTILATION SCHEDULE		
ROOM NUMBER	ROOM NAME	TOTAL CODE VENTILATION, CFM
100	ARRIVAL	100
103	COMMUNITY ROOM	1,250
104	STORAGE & AV	16
105	NEW BOOKS	100
106	YOUNG ADULTS	140
108	CIRCULATION	55
109	WORK ROOM	53
110	OFFICE	16
111	STORAGE	22
113	BREAK ROOM	13
116	COMPUTERS	105
117	FICTION	125
118	NON-PRINT MEDIA	50
119	PERIODICALS	95
120	NON-FICTION	165
121	STUDY	17
122	STUDY	23
123	STUDY	28
124	QUIET ROOM	75
125	CHILDREN'S	315
137	STORAGE	11

AIR DISTRIBUTION TERMINAL DEVICE SCHEDULE					
MARK	MANUFACTURER	MODEL	DESCRIPTION	DAMPER	FINISH
A	PRICE	AMD	LAY-IN \ SURFACE	OBD	WHITE
B	PRICE	RCG	LAY-IN \ SURFACE	OBD	CUSTOM
C	PRICE	RCG	LAY-IN \ SURFACE	---	CUSTOM
D	PRICE	SDS	(4) 1/2" SLOTS	PC	CUSTOM

ELECTRIC BASEBOARD HEAT (MARKEL)						
MARK	HEATING CAPACITY, W	UNIT WIDTH*	HEATED LENGTH	MODEL	VOLTAGE, V	QUANTITY
EBH-1	2,875	24' - 0"	23' - 0"	DBT	208	1

DUCTLESS SPLIT SYSTEM AIR CONDITIONING UNITS								
MARK	MANUFACTURER	MODEL NO.	COOLING CAPACITY, MBH	COOLING (SEER)	AIR FLOW	OUTDOOR UNIT MARK	OUTDOOR UNIT POWER SUPPLY	QUANTITY
DSS-1	MITSUBISHI	PKA-A12	12	13.8	290	PUY-A12	208/1/60	1

FANS (GREENHECK)									
MARK	CAPACITY, CFM	STATIC PRESSURE, IN. H2O.	INLET dBA	MOTOR HP	MAX. BHP	MODEL NO.	LOCATION	AREA SERVED	VOLTAGE, V
F-1	450	0.25	48	0.17	.04	G-095-VG	ROOF	RESTROOM 101 & 102	120
F-2	300	0.25	44	0.17	.03	G-095-VG	ROOF	ADMINISTRATION AREA	120
F-3	225	0.25	42	0.17	.02	G-095-VG	ROOF	RESTROOM 126	120
F-4	185	0.15	42	0.10	.01	SQ-85-VG	WATER 115	ELECTRIC ROOM 114	120

DIFFUSER, REGISTER & GRILLE LEGEND

CEILING DIFFUSERS

SUPPLY — 300 / 9-A — AIRFLOW, CFM; DEVICE MARK*; SQUARE DIFFUSER SIZE

SLOT DIFFUSER — 300 / 48-J — AIRFLOW, CFM; DEVICE MARK*; LENGTH OF SLOT DIFFUSER

REGISTERS

EXHAUST — 150 / 6-B — AIRFLOW, CFM; DEVICE MARK*; SQUARE REGISTER SIZE

150 / 16x8-D — AIRFLOW, CFM; DEVICE MARK*; SIZE

SUPPLY — 150 / 16x8-E — AIRFLOW, CFM; DEVICE MARK*; SIZE

GRILLES

RETURN — 10-C — SQUARE GRILLE SIZE; DEVICE MARK*

16x8-D — DEVICE MARK*; SIZE

*REFER TO AIR DISTRIBUTION TERMINAL DEVICE SCHEDULE

LEGEND

CONDENSATE DRAIN	D
COLD WATER	CW
GAS	G
REFRIGERANT SUCTION	RS
REFRIGERANT DISCHARGE	RD
REFRIGERANT LIQUID	RL
ELECTRIC THERMOSTAT	
DDC SPACE TEMPERATURE SENSOR	S
DDC SPACE HUMIDITY SENSOR	H
CARBON DIOXIDE SENSOR	C
DUCT SMOKE DETECTOR	
ACOUSTIC LINED DUCT (DOUBLE LINE)	
DUCT TRANSITION	
FLEXIBLE DUCT	
FLEXIBLE DUCT CONNECTION	
CONNECT TO EXISTING	
NEW WORK	
EXISTING WORK TO REMAIN	
EXISTING WORK TO BE REMOVED	

STANDARD ABBREVIATIONS

ø	DIAMETER	HR	HOUR
x/x	FLAT OVAL	HZ	HERTZ
ABV	ABOVE	IN	INCH(ES)
AFF	ABOVE FINISHED FLOOR	KW	KILOWATTS
APD	AIR PRESSURE DROP	LAT	LEAVING AIR TEMPERATURE
ARRGMT	ARRANGEMENT	LBS	POUNDS
AUTO	AUTOMATIC	LVD	LOW VOLTAGE MOTOR OPERATED DAMPER
AAV	AUTOMATIC AIR VENT	LWT	LEAVING WATER TEMPERATURE
AUX	AUXILIARY	MAV	MANUAL AIR VENT
BEL	BELOW	MAX	MAXIMUM
BTU	BRITISH THERMAL UNIT	MBH	THOUSAND BTU PER HOUR
BTUH	BTU PER HOUR	MECH	MECHANICAL
CAP	CAPACITY	MFG	MANUFACTURER
CFM	CUBIC FEET PER MINUTE	MIN	MINIMUM
CMU	CONCRETE MASONRY UNIT	MOD	MOTOR OPERATED DAMPER (LINE VOLTAGE)
CO	CLEANOUT	MP SW	MOTOR PROTECTIVE SWITCH
CONC	CONCRETE	MTD	MOUNTED
CONN	CONNECT	MVD	MANUAL VOLUME DAMPER
CONT	CONTINUATION	NC	NORMALLY CLOSED
CR	CONTROL RELAY	NIC	NOT IN CONTRACT
CTR	CURRENT RELAY	NO	NORMALLY OPEN
CW	COLD WATER	NTS	NOT TO SCALE
DB	DRY BULB	OA	OUTSIDE AIR
dB	DECIBEL	OAT	OUTSIDE AIR TEMPERATURE
DDC	DIRECT DIGITAL CONTROL	OBD	OPPOSED BLADE DAMPER
DIM	DIMENSIONS	OCC	OCCUPANCY or OCCUPIED
DISC	DISCONNECT SWITCH	PD	PRESSURE DROP
DP	DOUBLE POLE	PLP	PHASE LOSS PROTECTION
DN	DOWN	RA	RETURN AIR
EXST	EXISTING	RECT	RECTANGULAR
EA	EACH	SDR	DUCT SMOKE DETECTOR
EAT	ENTERING AIR TEMPERATURE	SDPR	SMOKE DAMPER
ELEC	ELECTRIC	SS	STAINLESS STEEL
EQUIP	EQUIPMENT	S/S	START-STOP
ENT	ENTERING	SUSP	SUSPENDED
EWT	ENTERING WATER TEMP	SW	SWITCH
ESP	EXTERNAL STATIC PRESSURE	TEMP	TEMPERATURE
°F	FAHRENHEIT	TYP	TYPICAL
FA	FIRE ALARM	V	VOLT
FDPR	FIRE DAMPER	VERT	VERTICAL
FSDPR	COMBINATION FIRE/SMOKE DAMPER	W	WATTS
FIN FL	FINISHED FLOOR	WB	WET BULB
FL	FLOOR	WC	WATER COLUMN
FLA	FULL LOAD AMPS	WG	WATER GAUGE
FP	FREEZE PROTECTION	WS	WATER STOP
FR	FROM or FAN RELAY	WT	WEIGHT
FS	FIRESTAT	w/	WITH
FT	FEET		
GAL	GALLONS		
GPM	GALLONS PER MINUTE		
H20	WATER COLUMN or WATER GAUGE		
HOA	HAND-OFF-AUTOMATIC		
HP	HORSEPOWER		

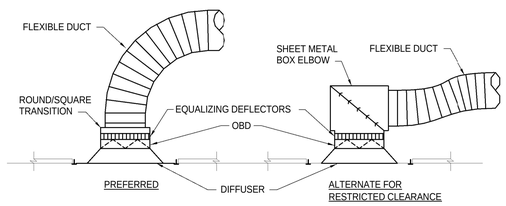

DIFFUSER CONNECTION DETAIL

NO SCALE

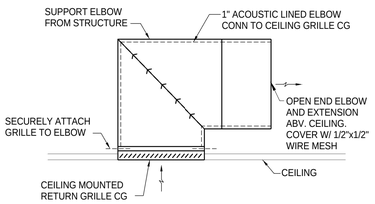

NOTE:
1. OVER-SIZE DUCTWORK WHEN REQUIRED TO MAINTAIN MINIMUM 4" CLEAR INSIDE LINING.

RETURN GRILLE DETAIL

NO SCALE

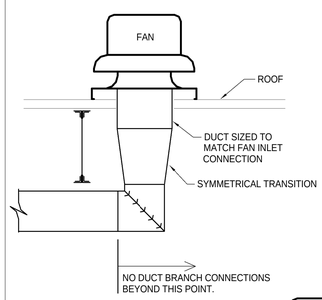

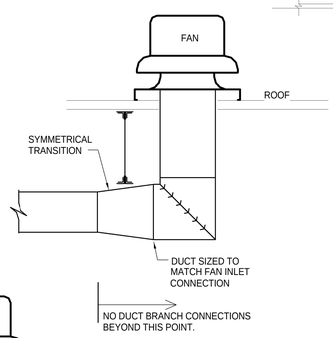

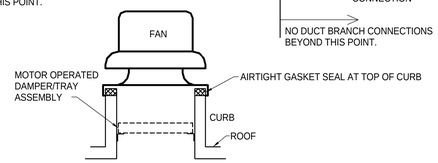

TYPICAL FOR BOTH FAN DETAILS

FAN CONNECTION DETAILS

NO SCALE

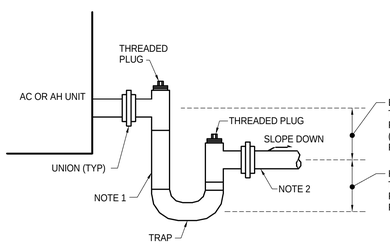

NOTES:
1. DRAIN LINE SHALL BE FULL SIZE OF UNIT CONNECTION, BUT NO SMALLER THAN 3/4".
2. EXTEND TO NEAREST ROOF/FLOOR DRAIN UNLESS NOTED OTHERWISE.
3. ARRANGEMENT SHOWN IS SUITABLE FOR DRAW-THROUGH UNITS ONLY.

COOLING COIL CONDENSATE DRAIN

NO SCALE

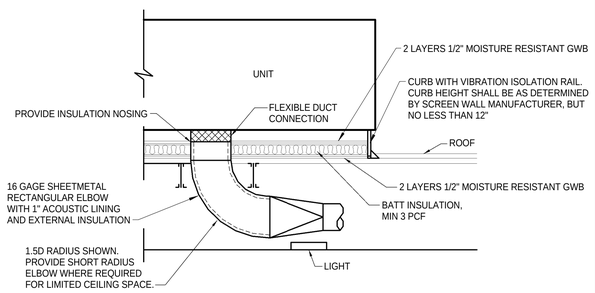

ROOFTOP AIR CONDITIONING UNIT DETAIL

SCHEMATIC

BUILDING LOAD SUMMARY			
TOTAL HEATING REQUIREMENTS			
TRANSMISSION	=	82.6	MBH
VENTILATION	=	94.5	MBH
TOTAL	=	177.1	MBH
TOTAL INSTALLED CAPACITY	=	368.8	MBH
TOTAL COOLING REQUIREMENTS			
SUM OF PEAK LOADS	=	23.3	TONS
TOTAL INSTALLED CAPACITY, DX	=	23.3	TONS

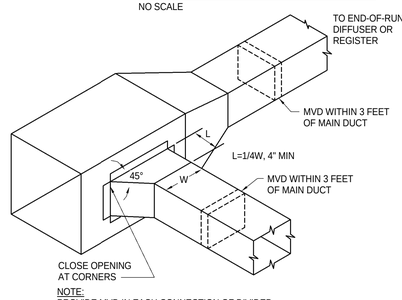

NOTE:
PROVIDE MVD IN EACH CONNECTION OF DIVIDED FLOW BRANCHES IN SIMILAR FASHION.

BRANCH CONNECTIONS DETAIL FOR SUPPLY, RETURN & EXHAUST DUCT (TYP)

SCHEMATIC

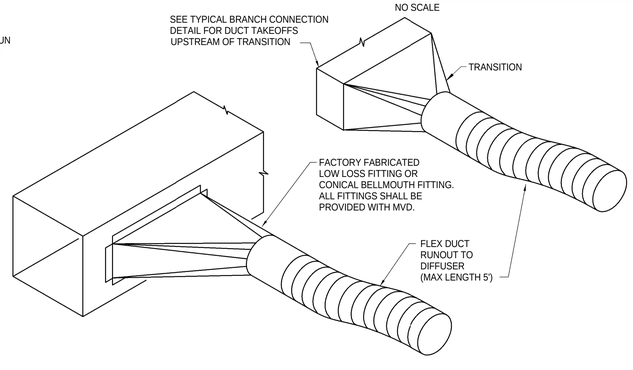

CONNECTIONS FOR FLEX DUCT (TYP)

SCHEMATIC

COORDINATION NOTE

ALL DUCTWORK AND PIPES SHALL BE COORDINATED WITH OTHER DUCTS, PIPES, LIGHTS, STRUCTURAL SYSTEM, CEILING SUPPORTS AND FRAMING BEFORE INSTALLATION. MINOR DUCT OFFSETS AND TRANSITIONS SHALL BE PROVIDED AS REQUIRED. WHERE TRANSITIONS ARE REQUIRED, CROSS SECTIONAL AREA OF DUCT SHALL NOT BE REDUCED. MEASUREMENTS FOR VERTICAL CLEARANCES OF DUCTWORK SHALL BE TAKEN AT THE JOB SITE BEFORE FABRICATION OF ANY DUCTWORK.

IDENTIFICATION KEY

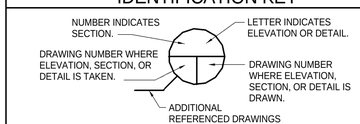

SECTION, ELEVATION, OR DETAIL SYMBOL

PACKAGED ROOFTOP HEAT PUMP SYSTEMS

	SUPPLY FAN				EXHAUST FAN			OUTDOOR AIR		ENTHALPY WHEEL								COOLING COIL						MOD. HOT GAS REHEAT CAPACITY, MBH.	ELECTRIC HEAT			FILTERS							
MARK	AIRFLOW, MAX CFM	AIRFLOW, MIN CFM	ESP., IN. H2O	MAX BHP	AIRFLOW, CFM	ESP., IN. H2O	MAX BHP	OUTSIDE AIR HIGH MINIMUM, CFM	OUTSIDE AIR LOW MINIMUM, CFM	RETURN APD, IN-WG	SUPPLY APD, IN-WG	SUMMER OUTSIDE EAT °DB/°WB	SUMMER RETURN EAT °DB/°WB	SUMMER SUPPLY LAT °DB/°WB	WINTER OUTSIDE EAT °DB/°WB	WINTER RETURN EAT °DB/°WB	WINTER SUPPLY LAT °DB/°WB	TOTAL CAP., MBH	SENS. CAP., MBH	ENT. AIR, °F DB	ENT. AIR, °F WB	LEAVING AIR, °F DB	LEAVING AIR, °F WB		ENT. AIR, °F	CAPACITY, KW	NO. OF STAGES	TYPE (SUPPLY & EXHAUST)	EFF.	MIN. NO. COMP.	IEER/ SEER	AMBIENT OAT, °F DB	MODEL NO.	UNIT WEIGHT	VOLTAGE, V
PAC-1	5,500	2,750	0.50	2.3	580	.5	.17	1,250	480	.54	.54	95.0/75.0	75.0/62.0	84.9/69.1	7.0/5.0	70.0/50.0	36.3/29.2	166.8	143.2	77.3	63.7	53.4	53.4	98.8	62.3	54.0	SCR	PLEATED	MERV 8	2	16.9	95.0	DPS015A	3,000	208
PAC-2	1,280	655	0.75	2.5	N/A	N/A	N/A	350	350	N/A	N/A	N/A	N/A	N/A	N/A	N/A	N/A	48.0	36.3	80.5	66.7	54.6	54.5	21.4	50.9	18.0	SCR	PLEATED	MERV 8	1	16.2	95.0	DPS004A	1,500	208
PAC-3	2,600	1,300	0.75	1.4	990	.5	2.3	990	260	.43	.43	95.0/75.0	75.0/62.0	77.6/64.4	7.0/5.0	70.0/50.0	60.8/44.8	82.6	68.1	76.0	62.9	52.1	51.9	50.6	43.4	36.0	SCR	PLEATED	MERV 8	2	19.6	95.0	DPS007A	3,000	208

ENTEROS DESIGN

314 EXCHANGE ALLEY
PETERSBURG, VA 23804

804.861.1200 P
804.861.1253 F

All ideas, designs, arrangements and plans indicated or represented by this drawing are property of ENTEROS DESIGN, PC; created, evolved and developed for the sole use of this project. These ideas, design arrangements and/or plans shall not be used by or disclosed to any person, firm or corporation for any purpose without written permission from ENTEROS DESIGN, PC. Written dimensions on these drawings shall have precedence over scaled dimensions. Contractors shall verify and be responsible for all dimensions and conditions on the job. The Architect must be notified of any variations from the dimensions and conditions shown on these drawings.
c 2016 ENTEROS DESIGN, PC

ASCENT ENGINEERING GROUP
4932 FRONTAGE ROAD NW
ROANOKE, VIRGINIA 24019
(540) 265-4444

D: SLM 15130 C: DLR

WILLIAMSON ROAD LIBRARY
3837 Williamson Road, Roanoke, VA 24012

CONSTRUCTION DOCUMENTS

REVISIONS:

MECHANICAL EQUIP NOTES, LEGEND & DETAILS

PROJ. NO.:156003 DRAWN BY:SLM
04.13.16

COMMONWEALTH OF VIRGINIA
DAVID L. ROLLER
Lic. No. 036362
4-13-2016
PROFESSIONAL ENGINEER

M0.01

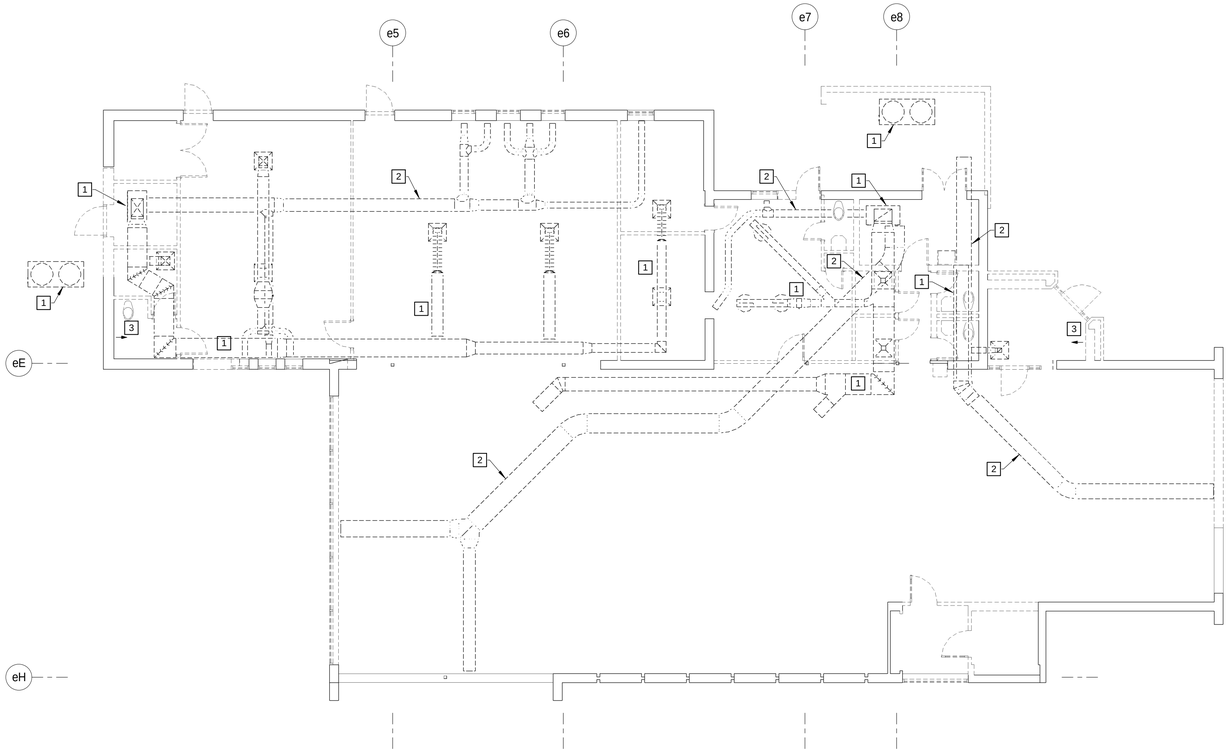

1 M1.01 FIRST FLOOR MECHANICAL DEMOLITION PLAN
1/8" = 1'-0"

DEMOLITION NOTES:

1. REMOVE EXISTING SPLIT SYSTEM HVAC UNIT. ALL ASSOCIATED DUCTWORK, AIR DEVICES, CONTROLS, PIPING, AND APPERTUANCES. INDOOR AND OUTDOOR UNITS SHALL BE TURNED OVER TO THE OWNER FOR REUSE ELSEWHERE.
2. UNDERGROUND DUCTWORK TO BE ABANDONED IN PLACE, INFILL ENDS OF DUCT WITH CONCRETE. REFER TO STRUCTURAL PLANS FOR REQUIREMENTS.
3. REMOVE EXISTING WALL HEATER. COORDINATE PATCHING OF WALL WITH ARCHITECTURAL REQUIREMENTS.

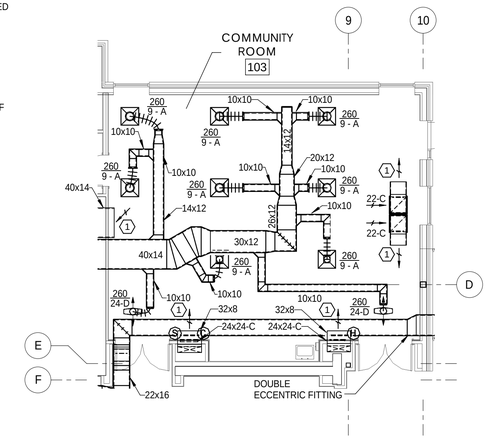

3 M1.01 FIRST FLOOR DUCTWORK PLAN ALTERNATE #6
1/8" = 1'-0"

PLAN NOTES:

1. OPEN END DUCT, COVER WITH 1/2"x1/2" WIRE MESH.
2. DUCT ROUTED BETWEEN STRUCTURE.
3. MAINTAIN NEC CLEARANCE ON ALL VAV BOXES.
4. REFRIGERANT PIPING SHALL BE SIZED AND ROUTED IN STRICT ACCORDANCE WITH MANUFACTURERS RECOMMNDATIONS AND SHALL BE COMPLETE FROM THE INDOOR UNIT TO THE OUTDOOR UNIT. ROUTE 1-1/4" COPPER CONDENSATE DRAIN LINE FROM DSS TO OPEN SITE DRAIN IN CORNER. SECURE PIPE TO WALL AND TERMINATE 1" ABOVE DRAIN. REFER TO PLUMBING PLANS FOR EXACT LOCATION OF DRAIN.
5. REFER TO SPECIFICATIONS FOR REQUIRED PIPE CURB THROUGH ROOF.
6. 12" DEEP PLENUM, FULL WIDTH AND HEIGHT OF LOUVER. REFER TO ARCHITECTURAL DRAWINGS FOR EXACT SIZE AND LOCATION.

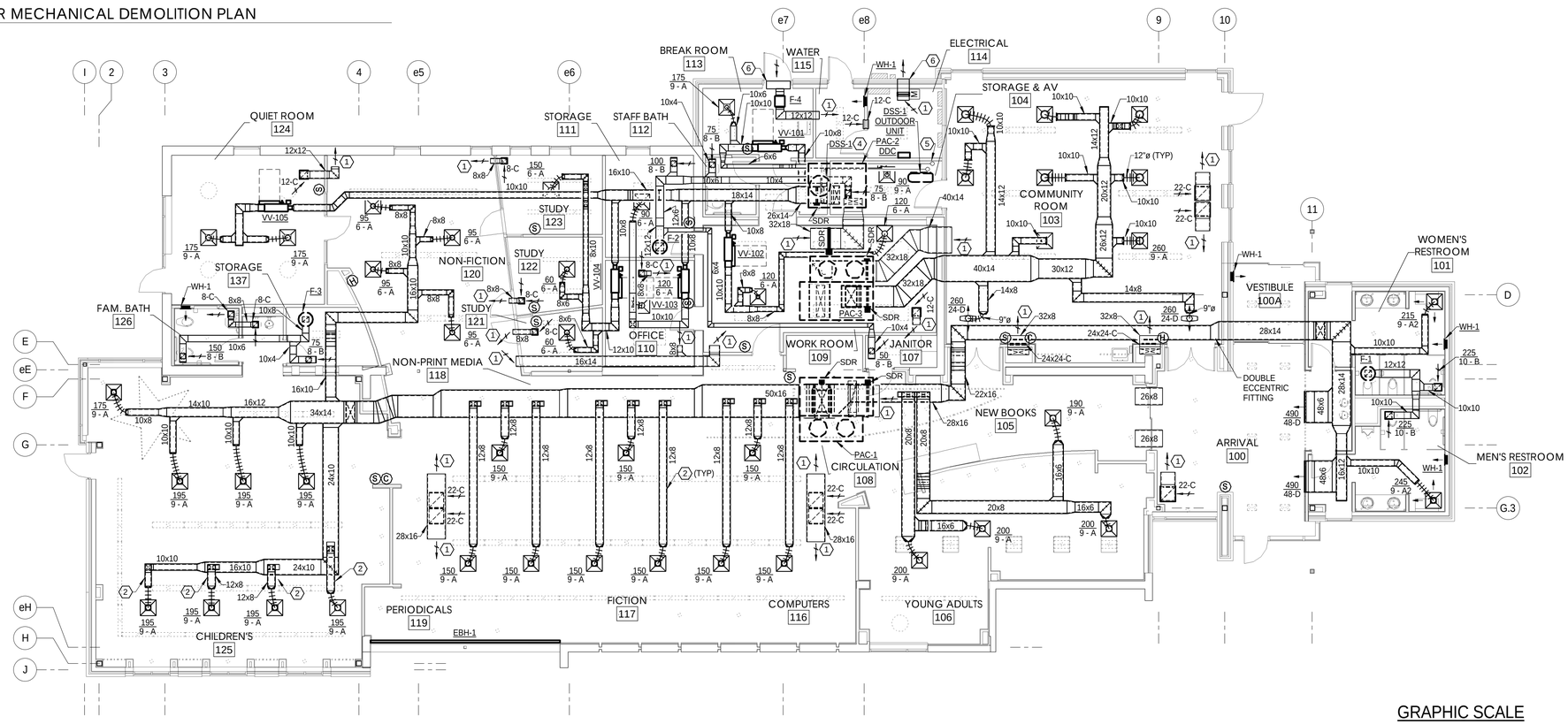

2 M1.01 FIRST FLOOR DUCTWORK PLAN
1/8" = 1'-0"

GRAPHIC SCALE
SCALE: 1/8" = 1'-0"
8' 4' 0 8' 16'

ENTEROS DESIGN
314 EXCHANGE ALLEY
PETERSBURG, VA 23804
804.861.1200 P
804.861.1253 F

All ideas, designs, arrangements and plans indicated or represented by this drawing are property of ENTEROS DESIGN, PC; created, evolved and developed for the sole use of this project. These ideas, design arrangements and/or plans shall not be used by or disclosed to any person, firm or corporation for any purpose without written permission from ENTEROS DESIGN, PC. Written dimensions on these drawings shall have precedence over scaled dimensions. Contractors shall verify and be responsible for all dimensions and conditions on the job. The Architect must be notified of any variations from the dimensions and conditions shown on these drawings.
c 2016 ENTEROS DESIGN, PC

ASCENT ENGINEERING GROUP
4932 FRONTAGE ROAD NW
ROANOKE, VIRGINIA 24019
(540) 265-4444
D: SLM 15130 C: DLR

WILLIAMSON ROAD LIBRARY

3837 Williamson Road, Roanoke, VA 24012

CONSTRUCTION DOCUMENTS

REVISIONS:

MECHANICAL DEMOLITION AND NEW WORK PLAN

PROJ. NO.:156003 DRAWN BY:SLM
04.13.16

COMMONWEALTH OF VIRGINIA
DAVID L. ROLLER
Lic. No. 036362
4-13-2016
PROFESSIONAL ENGINEER

NORTH

M1.01

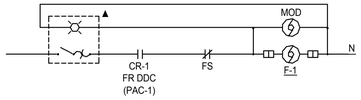

SIMILAR FANS
F-2
F-3

EXCEPTIONS
PAC-1
PAC-1

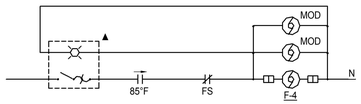

FANS

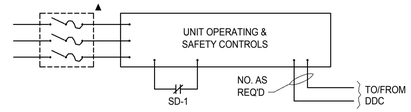

PAC-1

PAC-2 & PAC-3 SIMILAR

PACKAGED AIR CONDITIONERS

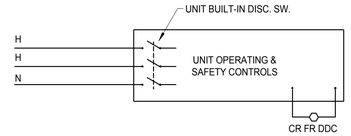

WALL HEATERS

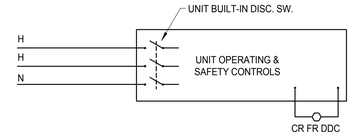

BASEBOARD HEATERS

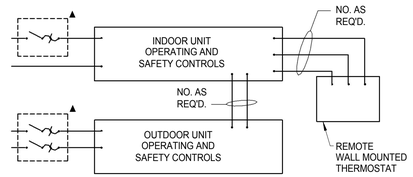

DUCTLESS SPLIT SYSTEM AIR CONDITIONER

CONTROL LEGEND

HOLDING COILS	COMBINATION FUSIBLE MOTOR STARTER RELAY
MOTOR	
MOTOR PROTECTIVE SWITCH	
DISCONNECT SWITCH (FUSED)	
DISCONNECT	
PILOT LIGHT	
T'STAT OR RELAY	
SET POINT-CLOSE BELOW 65°F	65°F
SET POINT-CLOSE ABOVE 65°F	65°F
CONTROL AIR TUBING	CA
ELECTRICAL WIRING, ABOVE 100 VOLT	PW
TWIST SHIELDED PAIR, 24 VOLT	

CURRENT RELAY	CTR	FIRESTAT	FS
CONTROL RELAY	CR	FIRE ALARM SYSTEM	F.A.
DIRECT DIGITAL CONTROL PANEL	DDC	PNEUMATIC ELECTRIC PHASE LOSS	PE
ELECTRIC PNEUMATIC	EP	PROTECTION	PLP
FAN RELAY	FR	START-STOP	S/S
FREEZE PROTECTION	FP	SMOKE DETECTOR	SD

ALL ITEMS SHOWN ON CONTROL DIAGRAMS AND WIRING 100 VOLTS OR LESS SHALL BE INCLUDED AS A PART OF SECTION 230900 EXCEPT POWER WIRING OVER 100 VOLTS, ITEMS MARKED ▲ OR ITEMS SPECIFIED TO BE FURNISHED WITH EQUIPMENT. WIRING OVER 100 VOLTS AND ITEMS MARKED ▲ SHALL BE FURNISHED AS A PART OF DIVISION 16. ALL OVERLOADS, HOA SWITCHES, AUXILIARY CONTACTS AND PILOT LIGHTS SHALL BE INTEGRAL WITH THE MOTOR STARTERS UNLESS SHOWN OTHERWISE.

ALL WIRING SHOWN ON ELECTRIC SEQUENCE CONTROLS SHALL BE OVER 100 VOLTS UNLESS NOTED OTHERWISE. RELAYS FROM THE CONTROL SYSTEM SHALL BE LOCATED ADJACENT TO THE CONTROLLED DEVICE (MOTOR OR MOTOR STARTER), AND MAY BE LOCATED WITHIN STARTER HOUSINGS WHERE SPACE IS AVAILABLE AND WHERE APPROVED BY NEC.

CONTROL ITEMS MARKED THUS "VENTILATION-ON-OFF" SHALL HAVE PLATE ENGRAVED WITH THE WORDING CONTAINED WITHIN THE QUOTE "..." MARKS PLUS EQUIPMENT IDENTIFICATION.

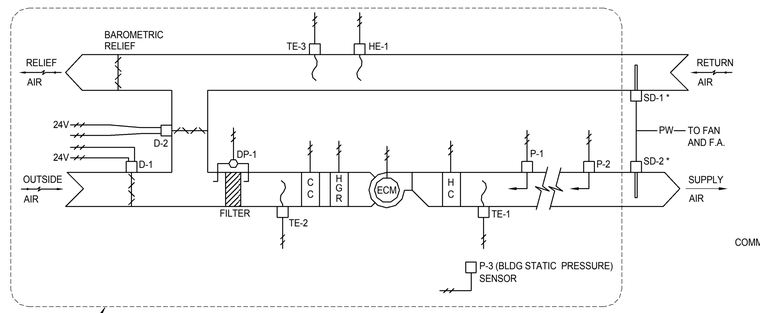

ALL EQUIPMENT INDICATED INSIDE BOUNDARY SHALL BE FURNISHED WITH EQUIPMENT

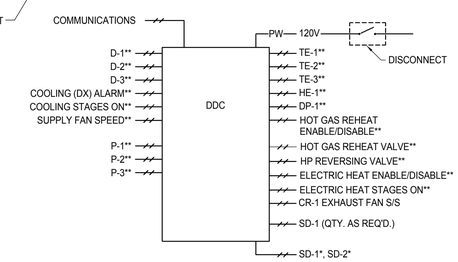

PAC-2

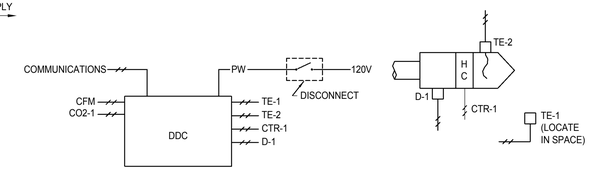

VARIABLE VOLUME HEATING BOXES

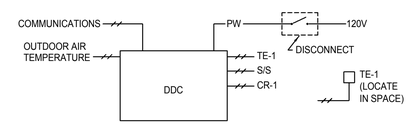

WALL HEATERS

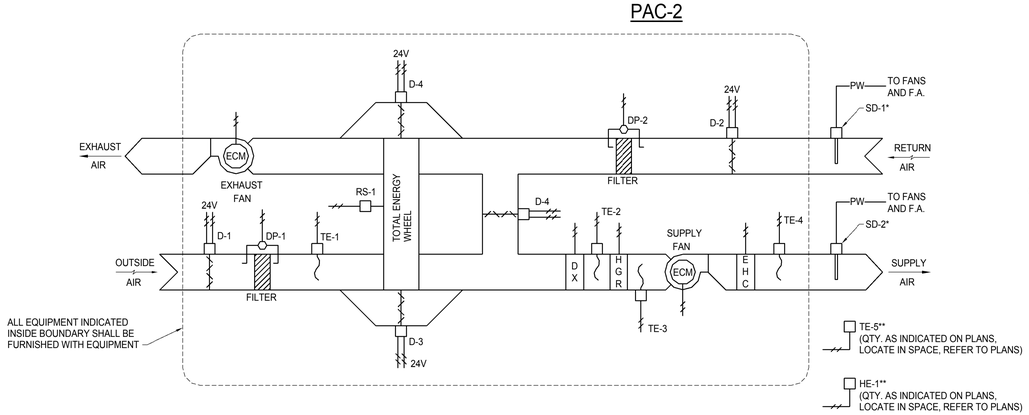

ALL EQUIPMENT INDICATED INSIDE BOUNDARY SHALL BE FURNISHED WITH EQUIPMENT

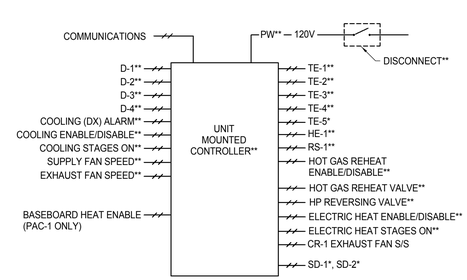

PAC-1

PAC-3 SIMILAR

* QTY. AS INDICATED ON PLANS
** FURNISHED WITH EQUIPMENT

ENTEROS DESIGN

314 EXCHANGE ALLEY
PETERSBURG, VA 23804

804.861.1200 P
804.861.1253 F

All ideas, designs, arrangements and plans indicated or represented by this drawing are property of ENTEROS DESIGN, PC; created, evolved and developed for the sole use of this project. These ideas, design arrangements and/or plans shall not be used by or disclosed to any person, firm or corporation for any purpose without written permission from ENTEROS DESIGN, PC. Written dimensions on these drawings shall have precedence over scaled dimensions. Contractors shall verify and be responsible for all dimensions and conditions on the job. The Architect must be notified of any variations from the dimensions and conditions shown on these drawings.
c 2016 ENTEROS DESIGN, PC

ASCENT
ENGINEERING GROUP

4932 FRONTAGE ROAD NW
ROANOKE, VIRGINIA 24019
(540) 265-4444

D: SLM 15130 C: DLR

WILLIAMSON ROAD LIBRARY

3837 Williamson Road, Roanoke, VA 24012

CONSTRUCTION DOCUMENTS

REVISIONS:

MECHANICAL DDC CONTROLS

PROJ. NO.:156003 DRAWN BY:SLM
04.13.16

COMMONWEALTH OF VIRGINIA
DAVID L. ROLLER
Lic. No. 036362
4-13-2016
PROFESSIONAL ENGINEER

M2.01

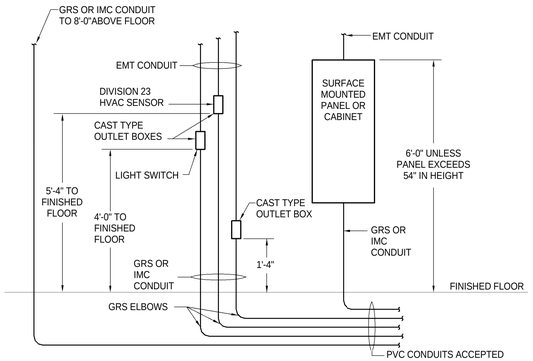

TYPICAL ELEVATION FOR SURFACE MOUNTED OUTLET BOXES, PANELS AND CABINETS IN ELECTRICAL ROOM

NO SCALE

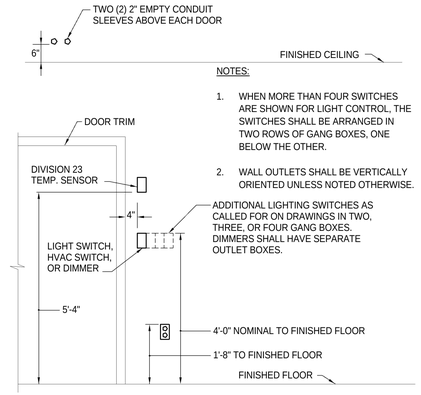

NOTES:

1. WHEN MORE THAN FOUR SWITCHES ARE SHOWN FOR LIGHT CONTROL, THE SWITCHES SHALL BE ARRANGED IN TWO ROWS OF GANG BOXES, ONE BELOW THE OTHER.
2. WALL OUTLETS SHALL BE VERTICALLY ORIENTED UNLESS NOTED OTHERWISE.

ADDITIONAL LIGHTING SWITCHES AS CALLED FOR ON DRAWINGS IN TWO, THREE, OR FOUR GANG BOXES. DIMMERS SHALL HAVE SEPARATE OUTLET BOXES.

TYPICAL ELEVATION FOR MOUNTING OUTLET BOXES AT DOORS

NO SCALE

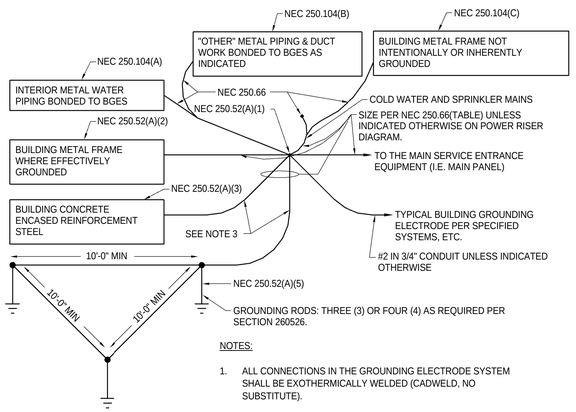

NOTES:

1. ALL CONNECTIONS IN THE GROUNDING ELECTRODE SYSTEM SHALL BE EXOTHERMICALLY WELDED (CADWELD, NO SUBSTITUTE).
2. BOND ALL GROUNDING ELECTRODE METALLIC RACEWAYS PER NEC 250.64(B).
3. NEC 250.50 ALLOWS THE UNSPLICED GROUNDING ELECTRODE CONDUCTOR TO BE RUN TO ANY OF THE ABOVE CONVENIENT GROUNDING ELECTRODES IN THE GROUNDING ELECTRODE SYSTEM. THEREFORE, ALL THE ABOVE GROUNDING ELECTRODE CONDUCTORS SHALL BE SIZED PER NEC 250.66 (TABLE) TO PERMIT THIS APPLICATION, UNLESS INDICATED OTHERWISE ON POWER RISER DIAGRAM.

BUILDING GROUNDING ELECTRODE SYSTEM (BGES)

SCHEMATIC

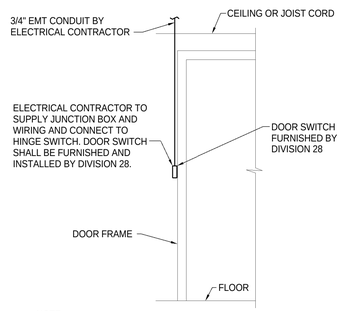

NOTE:

1. CONTRACTOR TO COORDINATE PLACEMENT OF CONDUIT FOR DOOR SWITCH WITH APPROVED DOOR MANUFACTURER.

BUILDING INTRUSION ALARM SYSTEM TYPICAL DOOR SWITCH ELEVATION

NOT TO SCALE

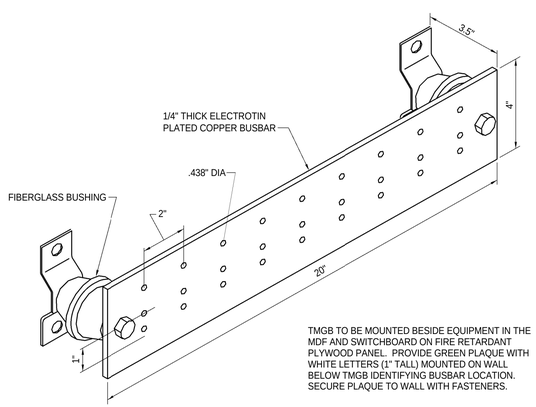

TMGB TO BE MOUNTED BESIDE EQUIPMENT IN THE MDF AND SWITCHBOARD ON FIRE RETARDANT PLYWOOD PANEL. PROVIDE GREEN PLAQUE WITH WHITE LETTERS (1" TALL) MOUNTED ON WALL BELOW TMGB IDENTIFYING BUSBAR LOCATION. SECURE PLAQUE TO WALL WITH FASTENERS.

TELECOMMUNICATIONS MAIN GROUNDING BUSBAR (TMGB)

NO SCALE

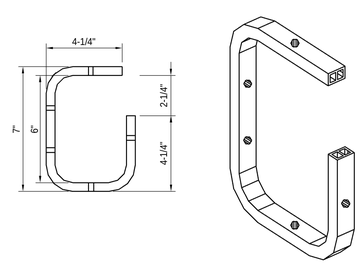

CABLE HOOK

NO SCALE

ELECTRICAL SYMBOLS

SYSTEM	AFF TOP OF OUTLET UNLESS NOTED	SYMBOL	DESCRIPTION
DATA/COMMUNICATIONS	1'-8"	HTV	PROVIDE ONE (1) 1-1/4" CONDUIT TO THE ACCESSIBLE CEILING VOID, BUSHED AND GROUNDED FOR CATV OUTLET. PROVIDE COAXIAL CABLING AND JACKS FOR EACH OUTLET. REFER TO SECTION 27 53 00 FOR INSTALLATION INSTRUCTIONS.
	1'-8"	HPC	PROVIDE ONE (1) 1-1/4" CONDUIT TO THE ACCESSIBLE CEILING VOID, BUSHED AND GROUNDED FOR PEOPLE COUNTER.
	1'-8"	HAV	PROVIDE ONE (1) 1-1/2" CONDUIT TO THE ACCESSIBLE CEILING VOID, BUSHED AND GROUNDED FOR AUDIO/VISUAL OUTLET. SEE SPECIFICTION SECTION 27 40 00 FOR EMPTY CONDUIT SYSTEM REQUIREMENTS.
	1'-8"	HD	PROVIDE ONE (1) 1-1/4" CONDUIT TO THE ACCESSIBLE CEILING VOID, BUSHED AND GROUNDED FOR DATA OUTLET. EACH D HAS A MINIMUM OF TWO (2) DATA CABLES. REFER TO SECTION 27 53 00 FOR INSTALLATION INSTRUCTIONS.
		AV	CEILING MOUNTED AUDIO/VISUAL OUTLET. SEE AV SPECIFICATION FOR REQUIREMENTS
		D	CEILING MOUNTED DATA OUTLET WITH TWO (2) DATA OUTLETS.
		HTMGB	TELECOMMUNICATIONS MAIN GROUNDING BUS BAR PER SPECIFICATIONS.
	1'-8"	HW	PROVIDE ONE (1) 1-1/4" CONDUIT TO THE ACCESSIBLE CEILING VOID, BUSHED AND GROUNDED FOR WALL MOUNTED DATA OUTLET FOR WIRELESS RADIO. PROVIDE ONE (1) DATA CABLE FOR EACH OUTLET. REFER TO SECTION 27 20 00 FOR INSTALLATION INSTRUCTIONS.
		DC	DOOR CONTACT
	4'-0"	CR	CARD READER
	5'-0"	KP	SECURITY SYSTEM KEYPAD
	10'-0"	H C	SURVEILLANCE SYSTEM CAMERA, WALL, COMPLETE WITH BOX, CONDUIT, AND DATA CABLING TO ACCESS CONTROL PANEL.
	10'-0"	H C WP	EXTERIOR SURVEILLANCE SYSTEM CAMERA, WALL, COMPLETE WITH BOX, CONDUIT, AND DATA CABLING TO ACCESS CONTROL PANEL.
	10'-0"	C	SURVEILLANCE SYSTEM CAMERA, CORNER WALL MOUNT, COMPLETE WITH BOX, CONDUIT, AND DATA CABLING TO ACCESS CONTROL PANEL.
		C WP	EXTERIOR SURVEILLANCE SYSTEM CAMERA, CEILING, COMPLETE WITH BOX, CONDUIT, AND DATA CABLING TO ACCESS CONTROL PANEL.
		C	SURVEILLANCE SYSTEM CAMERA, CEILING, COMPLETE WITH BOX, CONDUIT, AND DATA CABLING TO ACCESS CONTROL PANEL.

ELECTRICAL ABBREVIATIONS

A	-	AMPS	HP	-	HORSEPOWER
AC	-	AIR CONDITIONING	HW	-	HOT WATER
ACS	-	ABOVE COUNTER SPLASHBACK	HWCP	-	HOT WATER CIRCULATING PUMP
ATS	-	AUTOMATIC TRANSFER SWITCH	HZ	-	HERTZ
BRKR	-	BREAKER	IBS	-	IN BASE OF SHELVES
C	-	CONDUIT	IMC	-	INTERMEDIATE METAL CONDUIT
CLG	-	CEILING	J	-	JUNCTION BOX
COMB	-	COMBINATION	KVA	-	KILOVOLT-AMPS
CRT	-	CIRCUIT	KW	-	KILOWATT
CT	-	CURRENT TRANSFORMER	MP	-	MOTOR PROTECTIVE SWITCH
CUH	-	CABINET UNIT HEATER	MS	-	MOTOR STARTER
CW	-	COLD WATER	NF	-	NON-FUSIBLE
DDC	-	DIRECT DIGITAL CONTROLLER	PB	-	PUSH BUTTON
DH	-	DOOR HOLDER	PC	-	PHOTOCELL
DISC	-	DISCONNECT SWITCH	PNL	-	PANEL
DP	-	DOUBLE POLE	PAC	-	PACKAGED AIR CONDITIONING UNIT
DS	-	DOOR SWITCH			
DT	-	DOUBLE THROW	R	-	REMOVE
E	-	EXISTING	REC	-	RECEPTACLE
EGC	-	EQUIPMENT GROUND CONDUCTOR	S/N	-	SOLID NEUTRAL
EM	-	EMERGENCY	S/O	-	SPACE ONLY
EMT	-	ELECTRIC METALLIC TUBING	SP	-	SINGLE POLE
ESC	-	ELECTRIC SEQUENCE CONTROLS	ST	-	SINGLE THROW
EUH	-	ELECTRIC UNIT HEATER	SW	-	SWITCH
EWC	-	ELECTRIC WATER COOLER	TRANS	-	TRANSFORMER
FA	-	FIRE ALARM	UH	-	UNIT HEATER
FLA	-	FULL LOAD AMPS	V	-	VOLT
FP	-	FAN POWERED VARIABLE VOLUME BOXES	VV	-	VARIABLE VOLUME
			W	-	WATTS
GEC	-	GROUND ELECTRODE CONDUCTOR	WH	-	WALL HEATER
GEN	-	GENERATOR	WL	-	WHILE-IN-USE
GF	-	GROUND FAULT INTERRUPT	WP	-	WEATHERPROOF
GRS	-	GALVANIZED RIGID STEEL CONDUIT	Ø	-	PHASE
HOA	-	HAND-OFF-AUTOMATIC			

(REFER TO SPECS FOR ADDITIONAL ABBREVIATIONS)

SCHEDULE FOR MAINTAINED FOOTCANDLES

ROOM	CALCULATED FOOTCANDLES
STUDY ROOMS	40
MAIN LIBRARY	48
RESTROOM	30
STORAGE	35
ELECTRICAL	30
COMMUNITY ROOM	45
WORK ROOM	45
BREAK ROOM	50

DIVISION 23 - MECHANICAL EQUIPMENT

MARK	VOLTAGE	POLES	kVA
DSS-1 OUTDOOR UNIT	208 V	2	3.3 kVA
EBH-1	208 V	2	2.88 kVA
EWH-1	208 V	3	6 kVA
PAC-1	208 V	3	73 kVA
PAC-2	208 V	3	33 kVA
PAC-3	208 V	3	53 kVA
VV-101	208 V	2	1.6 kVA
VV-102	208 V	2	3.1 kVA
VV-103	208 V	2	1.6 kVA
VV-104	208 V	2	2.1 kVA
VV-105	208 V	2	2.6 kVA
WH-1	208 V	2	2 kVA
DDC	120 V	1	0.5 kVA
F-1	120 V	1	0.4 kVA
F-2	120 V	1	0.5 kVA
F-3	120 V	1	0.5 kVA
F-4	120 V	1	0.5 kVA
HWCP-1	120 V	1	0.5 kVA

ELECTRICAL SYMBOLS

SYSTEM	AFF TOP OF OUTLET UNLESS NOTED	SYMBOL	DESCRIPTION	
LIGHTING			CEILING OUTLET WITH 2'x4' LED OR FLUORESCENT FIXTURE	
			CEILING OUTLET WITH 2'x2' LED FIXTURE	
			CEILING OUTLET WITH 1'x4' LED FIXTURE	
			CEILING OUTLET WITH LED FIXTURE	
	AS INDICATED	H	WALL OUTLET WITH LED FIXTURE	
			CEILING OUTLET WITH EXIT SIGN FIXTURE, SINGLE OR DOUBLE FACED AS INDICATED BY SHADING, WITH ARROWS AS INDICATED	
	ABV DOOR LINTEL	H	WALL OUTLET WITH EXIT SIGN FIXTURE, SINGLE OR DOUBLE FACED AS INDICATED BY SHADING, WITH ARROWS AS INDICATED	
		OS	CEILING MOUNTED OCCUPANCY SENSOR, SENSOR SWITCH nCM PDT SERIES OR EQUAL, WITH POWER PACKS	
		PC	CEILING MOUNTED DAYLIGHT HAVESTING PHOTOCELL	
	4'-0"	S	SENSOR SWITCH nLIGHT nPODM WALLPOD WITH ONE (1) ON/OFF CONTROL COMPLETE WITH CAT 5e CABLING	
	4'-0"	S^M	SENSOR SWITCH nLIGHT nWSX LV WALLPOD WITH ONE (1) ON/OFF CONTROL AND INTEGRAL OCCUPANCY SENSOR, COMPLETE WITH CAT 5e CABLING	
	4'-0"	S^D	SENSOR SWITCH nLIGHT nPODM WALLPOD WITH ONE (1) ON/OFF CONTROL AND ONE (1) RAISE/LOWER DIMMING CONTROL COMPLETE WITH CAT 5e CABLING	
	4'-0"	S^{D2}	SENSOR SWITCH nLIGHT nPODM WALLPOD WITH TWO (2) ON/OFF CONTROLS AND TWO (2) RAISE/LOWER DIMMING CONTROLS COMPLETE WITH CAT 5e CABLING	
	4'-0"	$S^{WP}_{(\#)}$	SENSOR SWITCH nLIGHT nPOD GRAPHIC MOTION TOUCH PAD CONTROL STATION	
		TC	TIME CLOCK	
	ON ROOF	PC	PHOTOCELL, EXTERIOR	
		B	BATTERY BALLAST (DRIVER) FOR FLUORESCENT AND LED LIGHT FIXTURES	
RECEPTACLES	1'-8"	H	125V, 3W, 20A, 2P, 1ø DUPLEX RECEPTACLE, WALL	NEMA 5-20R
	1'-8"	H GF	125V, 3W, 20A, 2P, 1ø DUPLEX GROUND FAULT RECEPTACLE, WALL	NEMA 5-20R
	ACS	H GFA	125V, 3W, 20A, 2P, 1ø DUPLEX GROUND FAULT RECEPTACLE, WALL	NEMA 5-20R
	AS REQUIRED FOR EWC	H EWC	125V, 3W, 20A, 2P, 1ø DUPLEX GROUND FAULT RECEPTACLE, WALL LOCATED WITHIN EWC COVER	NEMA 5-20R
	4'-0"	H R	125V, 3W, 20A, 2P, 1ø DUPLEX RECEPTACLE, WALL DEDICATED FOR REFRIGERATOR	NEMA 5-20R
	GFA	H M	125V, 3W, 20A, 2P, 1ø DUPLEX GROUND FAULT RECEPTACLE , WALL DEDICATED FOR MICROWAVE	NEMA 5-20R
	1'-8"	H	125V, 3W, 20A, 2P, 1ø DOUBLE DUPLEX RECEPTACLE, WALL	NEMA 5-20R
	CEILING		125V, 3W, 20A, 2P, 1ø DUPLEX RECEPTACLE, CEILING	NEMA 5-20R
	1'-8"	H WL	125V, 3W, 20A, 2P, 1ø DUPLEX GROUND FAULT RECEPTACLE, WALL WITH WHILE IN USE WEATHER PROTECTIVE COVER	NEMA 5-20R
	1'-8"	H USB	125V, 3W, 20A, 2P, 1ø DUPLEX RECEPTACLE, WALL WITH TWO (2) USB CHARGING PORTS	NEMA 5-20R
	1'-8"	H L14-30	PROVIDE TYPE AND AMPERAGE RATING OF RECEPTACLE AS INDICATED BY NEMA NUMBER WITHIN SYMBOL. RECEPTACLE GRADE SHALL BE EQUIVALENT TO 125V, 20A RECEPTACLE SPECIFIED UNLESS INDICATED OTHERWISE.	
	FLOOR	D D D	WIREMOLD EVOLUTION ROUND OPENING FLOOR BOX, RFB6E / OG SERIES, 6CT FLUSH SERIES COVER WITH TWO (2) DATA OUTLETS AND TWO (2) POWER OUTLETS AS INDICATED ON POWER/DATA PLANS. PROVIDE TWO (2) 1-1/4" CONDUITS TO ACCESSIBLE CEILING VOID, BUSHED AND GROUNDED.	
	FLOOR	D AV	WIREMOLD EVOLUTION ROUND OPENING FLOOR BOX, RFB6E / OG SERIES, 6CT FLUSH SERIES COVER WITH ONE (1) DATA OUTLET, ONE (1) AUDIO/VISUAL OUTLET AND TWO (2) POWER OUTLETS AS INDICATED ON POWER/DATA PLANS. PROVIDE ONE 1-1/4" CONDUIT FOR DATA AND ONE (1) 1-1/4" CONDUIT FOR A/V, BOTH TO ACCESSIBLE CEILING VOID, BUSHED AND GROUNDED.	
BOXES AND WIRING			OUTLET BOX WITH LIQUID-TIGHT FLEXIBLE METAL CONDUIT CONNECTION TO EQUIPMENT	
		HD	OUTLET BOX WITH LIQUID-TIGHT FLEXIBLE METAL CONDUIT CONNECTION TO HAND DRYER	
			VERTICAL CONDUIT STUB UP FROM FLOOR WHERE SHOWN	
			CONDUIT RUN ABOVE CEILING	
			GROUNDING ELECTRODE CONDUCTOR (GEC) CONNECTED TO GROUND	
			LIGHTING CONTROL WIRE	
	5'-0"		HEAVY-DUTY DISCONNECT SWITCH	
	5'-0"	MS	MOTOR STARTER	
	5'-0"	MP	MOTOR PROTECTIVE SWITCH W/PILOT AND HEATER(S)	
	5'-0"	VFD	VARIABLE FREQUENCY DRIVE, BY DIVISION 23.	
		WH	WALL HEATER, FLUSH MOUNTED, BY DIVISION 23	
	6'-0"	PNL	ELECTRICAL PANEL, SURFACE MOUNT	
		J	JUNCTION BOX, CEILING	
		H J	JUNCTION BOX, WALL MOUNTED	
		CS	CONDUIT SLEEVE THRU WALL, BUSHED AT BOTH ENDS. BOND TO BGES OR NEAREST EFFECTIVELY GROUNDED METALLIC SURFACE. ALL CONDUITS 1-1/2" UNLESS OTHERWISE NOTED.	
		UEP	UNDERGROUND ELECTRICAL PRIMARY CONDUITS	
		USE	UNDERGROUND SECONDARY ELECTRICAL CONDUITS	
		UE	UNDERGROUND ELECTRICAL CONDUITS	
		USER	UNDERGROUND ELECTRICAL SECONDARY TO BE REMOVED	
		UEPR	UNDERGROUND ELECTRICAL PRIMARY TO BE REMOVED	
		UC	UNDERGROUND COMMUNICATION CONDUITS	
		UCR	UNDERGROUND COMMUNICATION CONDUITS TO BE REMOVED	
FIRE ALARM		S	ADDRESSABLE FIRE ALARM SYSTEM SMOKE (PHOTOELECTRIC) DETECTOR, CEILING	
		FACP	FIRE ALARM CONTROL PANEL	
	4'-0"	F	FIRE ALARM SYSTEM DUAL-ACTION PULL STATION, WALL WITH SPECIFIED SHIELD	
	7'-4"	H A	FIRE ALARM, AUDIO/VISUAL (HORN/STROBE) ALARM, WALL	
	7'-4"	H S	FIRE ALARM, VISUAL (STROBE) ONLY ALARM, WALL	

ENTEROS DESIGN

314 EXCHANGE ALLEY
PETERSBURG, VA 23804

804.861.1200 P
804.861.1253 F

All ideas, designs, arrangements and plans indicated or represented by this drawing are property of ENTEROS DESIGN, PC; created, evolved and developed for the sole use of this project. These ideas, design arrangements and/or plans shall not be used by or disclosed to any person, firm or corporation for any purpose without written permission from ENTEROS DESIGN, PC. Written dimensions on these drawings shall have precedence over scaled dimensions. Contractors shall verify and be responsible for all dimensions and conditions on the job. The Architect must be notified of any variations from the dimensions and conditions shown on these drawings.
c 2016 ENTEROS DESIGN, PC

ASCENT ENGINEERING GROUP
4932 FRONTAGE ROAD NW
ROANOKE, VIRGINIA 24019
(540) 265-4444

D:ROS 15130 C: ?

WILLIAMSON ROAD LIBRARY

3837 Williamson Road, Roanoke, VA 24012

CONSTRUCTION DOCUMENTS

REVISIONS:

ELECTRICAL SCHEDULES, LEGEND & DETAILS

PROJ. NO.:156003 DRAWN BY:ROS
04.13.16

COMMONWEALTH OF VIRGINIA
RANDALL O. SPENCER
Lic. No. 29321
04/13/2016
PROFESSIONAL ENGINEER

E0.01

EXIT LIGHT FIXTURE SCHEDULE

TYPE	VOLTAGE	MANUFACTURER	MODEL	DESCRIPTION
EXIT-1	120 V	BEGHELLI	CYC-SA-LR-1C OR 2M-WCS SERIES	CEILING MOUNTED, EDGE-LIT EXIT USING INDIRECT, HIGH OUTPUT LEDS, SINGLE FACE UNIVERSAL MOUNT, WHITE FINISH EXTRUDED ALUMINUM HOUSING, DIE CAST CANOPY, FIELD ADJUSTABLE CHEVRONS, WITH 90 MINUTE BATTERY, AND BATTERY CHARGER.
EXIT-2	120 V	BEGHELLI	CYC-SA-LR-1C OR 2M-WCS SERIES	WALL MOUNTED, EDGE-LIT EXIT USING INDIRECT, HIGH OUTPUT LEDS, SINGLE FACE UNIVERSAL MOUNT, WHITE FINISH EXTRUDED ALUMINUM HOUSING, DIE CAST CANOPY, FIELD ADJUSTABLE CHEVRONS, WITH 90 MINUTE BATTERY, AND BATTERY CHARGER.

LIGHTING FIXTURE SCHEDULE

TYPE	VOLTAGE	MANUFACTURER	MODEL	DESCRIPTION
A	120 V	LITECONTROL	12L-P-LPA-04-SOF-CX-35K-I025-D075-D10-1C-FA1	PENDANT MOUNTED 2.25" HIGH X 6.0" WIDE VI TECHNOLOGY ALLOWING FOR DIRECT/INDIRECT OUTPUTS TO BE INDEPENDENTLY SPECIFIED AND CONTROLLED, EXTRUDED ALUMINUM HOUSING WITH SOFTGLO ACRYLIC LENS AND OSRAM 10% DIMMING DRIVE AND LEDS. FIXTURES TO BE MOUNTED CONTINUOUS WITH FEED THROUGH WIRING TO ONLY HAVE POWER DOWN LEADS AT THE ENDS OF FIXTURE RUNS.
A2	120 V	LITECONTROL	12L-P-ID-LPA-08-SOF-CX-35K-I025-D040-D10-2C-FA1	PENDANT MOUNTED 2.25" HIGH X 6.0" WIDE VI TECHNOLOGY ALLOWING FOR DIRECT/INDIRECT OUTPUTS TO BE INDEPENDENTLY SPECIFIED AND CONTROLLED, EXTRUDED ALUMINUM HOUSING WITH SOFTGLO ACRYLIC LENS AND OSRAM 10% DIMMING DRIVE AND LEDS. FIXTURES TO BE MOUNTED CONTINUOUS WITH FEED THROUGH WIRING TO ONLY HAVE POWER DOWN LEADS AT THE ENDS OF FIXTURE RUNS.
B	120 V	LITECONTROL	44L-DW-D-04-SGL-CX-35K-D050-D10	LINEAR MODULAR FIXTURE WITH SNAP-IN LENS, STEEL HOUSING WITH SOFTGLO ACRYLIC LENS AND OSRAM 10% DIMMING, VARIABLE INTENSITY (VI) TECHNOLOGY ALLOWS PRECISE SPECIFICATION OF FIXTURE OUTPUT/WATTAGE. PROVIDE CONTINUOUS LENGTHS IN 4', 6' & 8'.
C	120 V	COLUMBIA LIGHTING	LTRE22-35VLG-RFA-EDU	ENCLOSED HIGH EFFICIENCY LENS FEATURES LINEAR PRISM ACRYLIC AND PROVIDES VISUAL COMFORT AND HIGH PERFORMANCE WITHOUT PIXELATION, 60,000 HOUR LEDS AT L80 (UP TO 150,000 PROJECTED LIFE) FOR REDUCED MAINTENANCE, LUMINAIRE HOUSING AND END CAPS ARE DIE FORMED CODE GAUGE COLD ROLLED STEEL, REFLECTOR IS STIFFENED WITH LINEAR FORMS, PROFILED TO A PRECISION CURVE.
C4	120 V	COLUMBIA LIGHTING	TRE-24-228G-RFA-EPU	LUMINAIRE HOUSING AND END CAPS ARE DIE FORMED CODE GAUGE COLD ROLLED STEEL, REFLECTOR IS STIFFENED WITH LINEAR FORMS, PROFILED TO A PRECISION CURVE, SURFACES ARE FINISHED AFTER FABRICATION WITH UNIQUE FORMULA HIGH REFLECTIVITY MATTE WHITE PAINT.
D	120 V	PRESCOLITE	LF6LEDG4-6LFLED7G4-35K-FL35-BXX	SPECIFICATION GRADE LED OPEN DOWNLIGHT USING REMOTE PHOSPHOR TECHNOLOGY, PHILIPS FORTIMO LED DRIVER, 0-10V DIMMING AND 35° CUT OFF. SUITABLE FOR WET LOCATIONS.
D1	120 V	DELRAY LIGHTING	47421-W35-D1	SEMI RECESSED LED DOWNLIGHT, SEMI-RECESSED HANDBLOWN OPAL GLASS SHADE WITH LOW GLARE MATTE INTERIOR.
D2	120 V	PRESCOLITE	LF6LED8G4-6LFLED8G4-35K-FL35-BXX	SPECIFICATION GRADE LED OPEN DOWNLIGHT USING REMOTE PHOSPHOR TECHNOLOGY, PHILIPS FORTIMO LED DRIVER, 0-10V DIMMING AND 35° CUT OFF. SUTIABLE FOR WET LOCATIONS.
D4	120 V	PRESCOLITE	LF4LEDG4-4LFLED6G4-35K-BXX	SPECIFICATION GRADE LED OPEN DOWNLIGHT USING REMOTE PHOSPHOR TECHNOLOGY, PHILIPS FORTIMO LED DRIVER, 0-10V DIMMING AND 35° CUT OFF.
G	120 V	CON-TECH LIGHTING	RAN15038X2B-HBC24 LR0925D-70M45D-E26-2700K	18-GAUGE STEEL HOUSING, POWDER COAT PAINTED IN MATTE BLACK, ADJUSTABLE LAMP HOLDERS IN BLACK, 25W LED PAR38 LAMP, E26 BASE FOR ABOVE, SMOOTH WIDE BEAM PROVIDING EXCELLENT UNIFORMITY.
H	120 V	ECOSENSE LIGHTING	L35-I-12-04-30-80-MULT-120/LDCM-120-277-0-10V -GR	FLIP TO FLAT™ HINGE, ALLOWING VERTICAL AIMING FROM 0-180. 24.7mm (0.97") HIGH WHEN FLAT, EXTRUDED ALUMINUM, CLEAR POLYCARBONATE, STAINLESS STEEL FASTENERS, INTEGRAL MALE/FEMALE CONNTECTORS.
H2-11	120 V	FEELUX	NDV-35K-ST-BK2-40-V-XXFT-HW-NDM	DC 24V – 75 LUMENS PER WATT, QUICK CONNECT BETWEEN FIXTURES.
H2-22	120 V	FEELUX	NDV-35K-ST-BK2-40-V-XXFT-HW-NDM	DC 24V – 75 LUMENS PER WATT, QUICK CONNECT BETWEEN FIXTURES.
K	120 V	EUREKA LIGHTING	3550-36-F.T5.21-120V-FRO-3980	RECTANGULAR PROFILE 36" IN LENGTH, EXTRUDED ALUMINUM WITH INJECTION MOLDED END CAPS.
K-V	120 V	EUREKA LIGHTING	3550-36-F.T5.21-120V-FRO-3980	RECTANGULAR PROFILE 36" IN LENGTH, EXTRUDED ALUMINUM WITH INJECTION MOLDED END CAPS, MOUNTED VERTICALLY.
L	120 V	CON-TECH LIGHTING	CTL181V-35-D-P-FA18-LF48LSH/LA18-P	STEALTH LED WALL LIGHTER TRACK FIXTURE, LOCKABLE, PRECISION AIMING ADJUSTMENT: 360°+ AIMING HORIZONTAL AND 360° VERTICAL.
M	120 V	PRIMA LIGHTING	GEOFF IV-2942V-E7-LD-XX-UV-358	SURFACE MOUNT LED PENDANT, ALL ACRYLIC ROD COMES WITH FROSTED TOP AND BOTTOM, E7 (CANOPY) INCLUDES DIMMABLE CONSTANT CURRENT DRIVER.
P	120 V	PRIMA LIGHTING	SWISS IV-911X-EX	SINGLE LAMP SUSPENDED PENDANT WITH A CYLINDRICAL INNER GLASS SHADE.
P2	120 V	V2	C2CP-D-V-D07-83-35-40-X-XX-XX-XX	3.5" x 8" SCULPTURED PENDANT WITH 0-10V DIMMING DRIVER, XICATO LED MODULE, DEEP CANOPY, ALUMINUM AND STAINLESS STEEL.
R	120 V	BARBICAN	16-0436-LFXX-12H-AXX-HTO-NT-XX-LED144W-DB	36" ROUND PENDANT UNIT, LAMINATED FABRIC SHADELESS TRIM, 144 WATT LEDS WITH HIGH TRANSMISSION BOTTOM LENS.
T	120 V	IMPACT ARCHITECTURAL LIGHTING	P9924.LED-XX-35LO-XX-DM110-XXPC	24" PENDANT WITH DECORATIVE FILM, 1-10V DIMMING DRIVER IN EXTRUDED ALUMINUM MATTE ANODIZED HOUSING.
T2	120 V	IMPACT ARCHITECTURAL LIGHTING	P9924.LED-XX-35LO-XX-DM110-XXPC	24" PENDANT WITH DECORATIVE FILM, 1-10V DIMMING DRIVER IN EXTRUDED ALUMINUM MATTE ANODIZED HOUSING.
V	120 V	AXO LIGHT	USSPIRYXBCXXE26-17W LED	82" HIGH BY 22" DIAMETER PENDANT DECORAIVE UNIT, MATTE WHITE VARNISHED ALUMINUM SPIRAL CURVE.
W	120 V	iLIGHT TECHNOLOGIES	PLEXINEON WHITE 1X	HIGH INTENSITY WHITE LEDS, LOW VOLTAGE, UV AND IMPACT RESISTANT ACRYLIC DIFFUSER, SILVER HOUSING.
Y	120 V	KIM LIGHTING	LTV81FF-NF-36L4KUV	SEALED IP68 LED LIGHT ENGINE, BLUETOOTH CONNECTIVITY FOR REMOTE CONTROL, AIMING AND DIMMING, MOBILE APP FOR ANDROID AND IOS, ONE-PIECE IMPREGNATED CAST BRONZE, FULLY SEALED COMPONENT MODULE SECURED TO THE FACE TRIMS FROM THE UNDERSIDE.
Z	120 V	COLUMBIA LIGHTING	AWN4-228-EPU	CLEAR ACRYLIC PRISMATIC DIFFUSER, FLAT BOTTOM WITH VERTICAL SIDES AND HINGES FROM EITHER SIDE. ALL PARTS PRE-PAINTED WITH HIGH GLOSS BAKED WHITE ENAMEL, MINIMUM REFLECTANCE 86%.

GENERAL LIGHT FIXTURE NOTE:

ARCHITECT SHALL SELECT COLORS FOR ALL LIGHT FIXTURES.

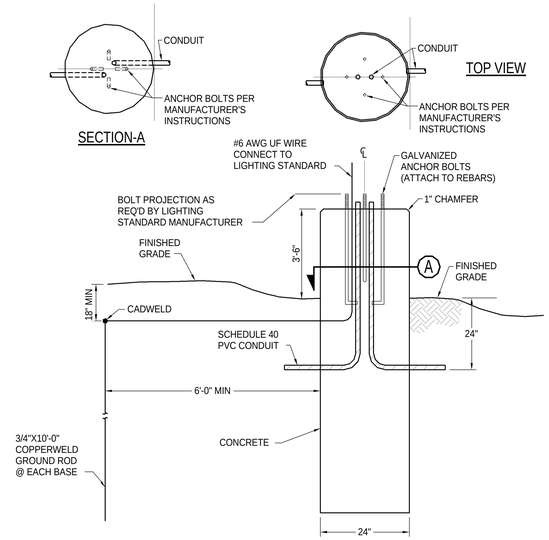

NOTES:

1. REFER TO NEC 410.15 FOR BONDING, GROUNDING AND OTHER CODES REGARDING LIGHTING POLE INSTALLATIONS.
2. SEE SPECIFICATIONS FOR MORE INFORMATION ON POLE MOUNTED LUMINAIRE AND BASE.

LIGHTING STANDARD FOUNDATION

NO SCALE - PAVED AREAS

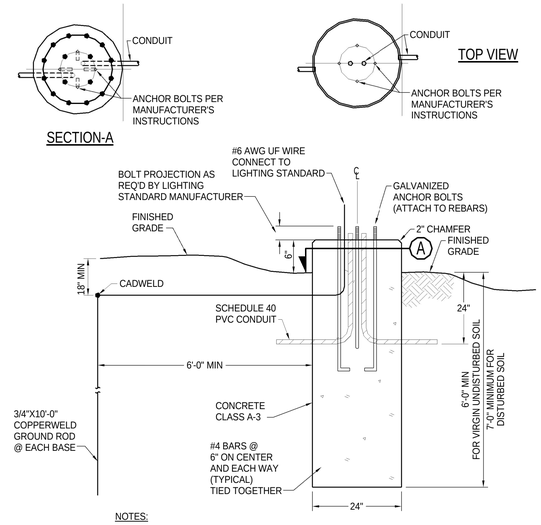

NOTES:

1. POLE FOUNDATIONS TO BE SET-BACK FROM PAVEMENT OR CURB AT LEAST 4'-0".
2. REFER TO NEC 410.15 FOR BONDING, GROUNDING AND OTHER CODES REGARDING LIGHTING POLE INSTALLATIONS.
3. SEE SPECIFICATIONS FOR MORE INFORMATION ON POLE MOUNTED LUMINAIRE AND BASE.
4. CYLINDER TYPE CONCRETE BASE ABOVE AND BELOW GRADE.

LIGHTING STANDARD FOUNDATION

NO SCALE - OFF PAVEMENT

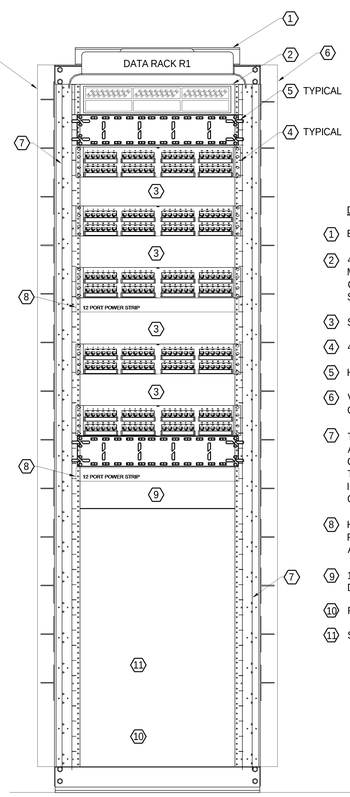

DATA RACK NOTES THIS SHEET:

1. EQUIPMENT RACK BOLTED TO THE FLOOR.
2. 48 PORT FIBER ENCLOSURE COMPLETE WITH ENOUGH MULTI-MODE CONNECTORS, PLATES AND MULTI-MODE COUPLERS TO ACCOMMODATE 48, 62.5 MICRON MULTIMODE SC CONNECTIONS.
3. SPACE FOR OWNER PROVIDED ETHERNET DATA SWITCH.
4. 48 PORT CATEGORY 6 PATCH PANEL.
5. HORIZONTAL CABLE MANAGEMENT.
6. VERTICAL CABLE MANAGEMENT WITH HINGE GROOVED COVERS.
7. TRIPP LITE VERTICAL SINGLE PHASE SWITCHED PDU, 20 AMP, 24 NEMA 5-15/20 RECEPTACLE OUTLETS, VISUAL CURRENT METER, TEMPERATURE MONITORING DEVICES, TEMPERATURE ALARM INTERFACE, AND ETHERNET INTERFACE FOR REPORTING POWER AND LOAD CHARACTERISTICS.
8. HORIZONTAL POWER STRIP COMPLETE WITH SIX (6) POWER OUTLETS, ON/OFF SWITCH, EXTENSION CORD AND NO SURGE SUPPRESSION.
9. 100 PAIR RACK MOUNTED 110 STYLE PUNCH DOWN BLOCK FOR DEDICATED PHONE LINES.
10. RACK MOUNTED UPS COMPONENTS ARE OWNER PROVIDED.
11. SPACE FOR OWNER PROVIDED EQUIPMENT.

DATA RACK LAYOUT R1 IN MDF CLOSET

SCHEMATIC

DATA RACK R1 IN MDF CLOSET

DATA DROPS = 118
WIRELESS PoE PORTS = 13
IP CAMERA DROPS = 25
TOTAL DATA DROPS = 156

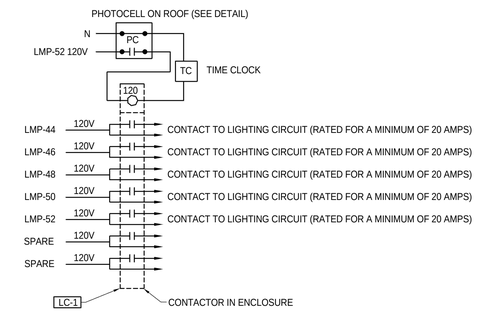

LIGHTING CONTACTOR SEQUENCE FOR PC CONTROL (LC1)

SCHEMATIC

NOTES:

1. CONNECT PHOTOCELL TO CONTROL CONTACTOR LOCATED IN MECHANICAL ELECTRICAL ROOM 114. CONTACTOR SHALL OPERATE LIGHTING CIRCUITS AS INDICATED. THE CONTROL WIRING BETWEEN THE PHOTOCELL AND THE CONTACTOR SHALL BE CONNECTED TO CIRCUIT AS INDICATED.
2. CONTACTOR SHALL HAVE MANUAL OVERRIDE CONTROL SWITCH TO ENERGIZE LIGHTING CIRCUITS REGARDLESS OF PHOTOCELL INPUT.

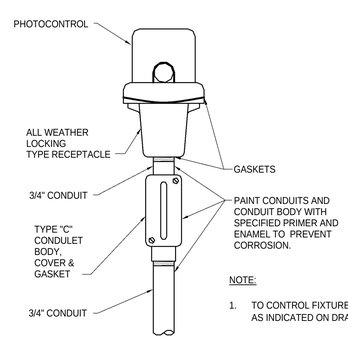

NOTE:

1. TO CONTROL FIXTURES ON CIRCUITS AS INDICATED ON DRAWINGS.

PHOTOCELL MOUNTING DETAIL

NO SCALE

ENTEROS DESIGN

314 EXCHANGE ALLEY
PETERSBURG, VA 23804

804.861.1200 P
804.861.1253 F

All ideas, designs, arrangements and plans indicated or represented by this drawing are property of ENTEROS DESIGN, PC; created, evolved and developed for the sole use of this project. These ideas, design arrangements and/or plans shall not be used by or disclosed to any person, firm or corporation for any purpose without written permission from ENTEROS DESIGN, PC. Written dimensions on these drawings shall have precedence over scaled dimensions. Contractors shall verify and be responsible for all dimensions and conditions on the job. The Architect must be notified of any variations from the dimensions and conditions shown on these drawings.
c 2016 ENTEROS DESIGN, PC

ASCENT ENGINEERING GROUP

4932 FRONTAGE ROAD NW
ROANOKE, VIRGINIA 24019
(540) 265-4444

D:ROS 15130 C: ?

WILLIAMSON ROAD LIBRARY

3837 Williamson Road, Roanoke, VA 24012

CONSTRUCTION DOCUMENTS

REVISIONS:

ELECTIRCAL DETAILS

PROJ. NO.:156003 DRAWN BY:ROS
04.13.16

COMMONWEALTH OF VIRGINIA
RANDALL O. SPENCER
Lic. No. 29321
04/13/2016
PROFESSIONAL ENGINEER

E0.02

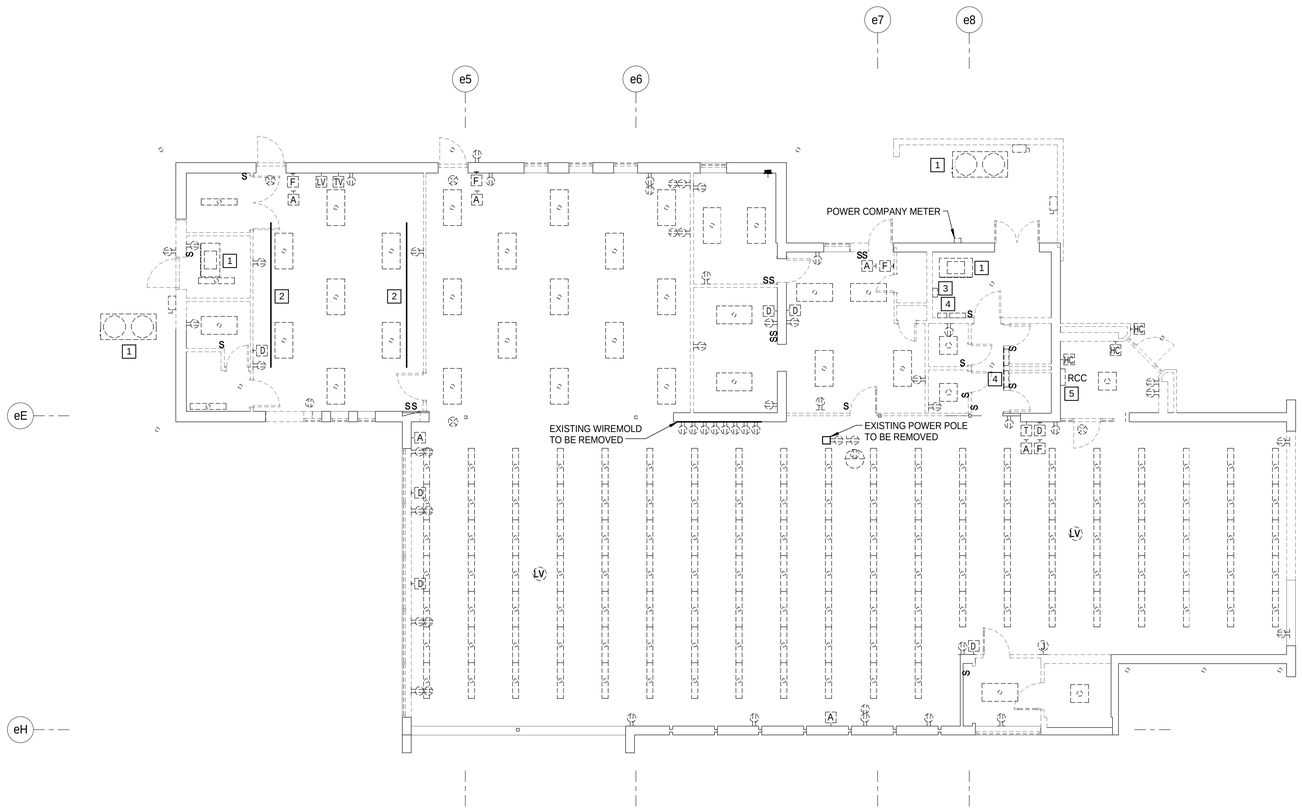

1 E1.01 FIRST FLOOR ELECTRICAL DEMOLITION PLAN

1/8" = 1'-0"

ELECTRICAL DEMOLITION SHEET NOTES:

1. MECHANICAL GEAR SHALL BE DISCONNECTED ELECTRICALLY PRIOR TO BEING REMOVED.
2. LIGHTING TRACK AND FIXTURES TO BE DISCONNECTED AND REMOVED.
3. EXISTING FIRE ALARM PANEL TO BE DISCONNECTED AND REMOVED.
4. EXISTING PANELBOARDS TO BE DISCONNECTED AND REMOVED.
5. FIRE ALARM REMOTE CONTROL CENTER TO BE DISCONNECTED AND REMOVED.

GRAPHIC SCALE

SCALE: 1/8" = 1'-0"

8' 4' 0 8' 16'

ENTEROS DESIGN

314 EXCHANGE ALLEY
PETERSBURG, VA 23804

804.861.1200 P
804.861.1253 F

All ideas, designs, arrangements and plans indicated or represented by this drawing are property of ENTEROS DESIGN, PC; created, evolved and developed for the sole use of this project. These ideas, design arrangements and/or plans shall not be used by or disclosed to any person, firm or corporation for any purpose without written permission from ENTEROS DESIGN, PC. Written dimensions on these drawings shall have precedence over scaled dimensions. Contractors shall verify and be responsible for all dimensions and conditions on the job. The Architect must be notified of any variations from the dimensions and conditions shown on these drawings.
c 2016 ENTEROS DESIGN, PC

ASCENT ENGINEERING GROUP

4932 FRONTAGE ROAD NW
ROANOKE, VIRGINIA 24019
(540) 265-4444

D:ROS 15130 C: ?

WILLIAMSON ROAD LIBRARY

3837 Williamson Road, Roanoke, VA 24012

CONSTRUCTION DOCUMENTS

REVISIONS:

ELECTRICAL FIRST FLOOR DEMOLITION PLAN

PROJ. NO.:156003 DRAWN BY:ROS
04.13.16

COMMONWEALTH OF VIRGINIA
RANDALL O. SPENCER
Lic. No. 29321
04/13/2016
PROFESSIONAL ENGINEER

NORTH

E1.01

NOTES THIS SHEET:

1. LIGHTS IN THE COMMUNITY ROOM UNDER ALTERNATE #6 ARE THE SAME AS IN THE BASE BID COMMUNITY ROOM.
2. THIS ROOM HAS INDEPENDANT DIMMABLE, LOW VOLTAGE LIGHTING CONTROLS.
3. THIS ROOM'S LIGHTING IS CONTROLLED FROM THE CIRCULATION DESK DIMMABLE LOW VOLTAGE LIGHTING CONTROLS.
4. THIS ROOM HAS SECONDARY LIGHTING CONTROLS.
5. LIGHT FIXTURE TYPES H2-22 SHALL BE MOUNTED UNDER CABINETS IN THIS ROOM.
6. LIGHT FIXTURE TYPE G SHALL BE MOUNTED AT THE HIGH CIEILING THIS SPACE.
7. LIGHT FIXTURES, LIGHTING CONTROLS AND POWER CIRCUIT LAYOUTS FOR LIGHTING IN THE COMMUNITY ROOM UNDER ALTERNATE #6 ARE THE SAME AS IN THE BASE BID COMMUNITY ROOM.
8. LIGHTS SHALL BE CONNECTED AND CONTROLLED BY WALLPOD SWP1. THE LIGHTS ON THIS STRING SHALL BE CONTROLLED AND DIMMED SEPARATELY FROM OTHER LIGHT STRINGS IN THE ROOM. PROVIDE LIGHTING CONTROL GATEWAY AS NEEDED.
9. LIGHTS SHALL BE CONTROLLED (ON/OFF/DIM) BY DIMMER IN AREA 100 AND BY SWP1. THE LIGHTS ON THIS STRING SHALL BE CONTROLLED AND DIMMED SEPARATELY FROM OTHER LIGHT STRINGS IN THE ROOM. PROVIDE LIGHTING CONTROL GATEWAY AS NEEDED.
10. LIGHTS SHALL BE CONTROLLED BY PHOTOCELL TO TURN OFF DURING SUNLIGHT.
11. ALL SD DIMMERS IN THIS AREA SHALL ALSO BE CONTROLLED BY SWP2 AT CIRCULATION DESK. PROVIDE GATEWAY AS NEEDED. PROVIDE (ON/OFF/DIM) CONTROLS.
12. ALL SD DIMMERS IN THIS AREA SHALL ALSO BE CONTROLLED BY SWP3 AT CIRCULATION DESK. PROVIDE GATEWAY AS NEEDED. PROVIDE (ON/OFF/DIM) CONTROLS.

GENERAL NOTES THIS SHEET:

1. SEE DRAWING E0.02 FOR LIGHT FIXTURE SCHEDULES.
2. ALL EXIT SIGNS ARE CONNECTED TO CIRCUIT LMP-15.
3. ALL UNSWITCHED LIGHT FIXTURES WITH A BATTERY AND NOT CONTROLLED WITH AN OCCUPANCY SENSOR ARE WALK-THROUGH LIGHTS.
4. THE (pc) BESIDE EACH FIXTURE INDICATES THAT THE RESPECTIVE FIXTURE IS CONTROLLED BY THE ROOM PHOTOCELL FOR DAYLIGHT HARVESTING.

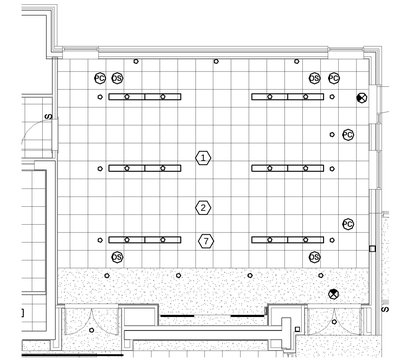

2 / E2.01 FIRST FLOOR LIGHTING PLAN ALTERNATE #6
1/8" = 1'-0"

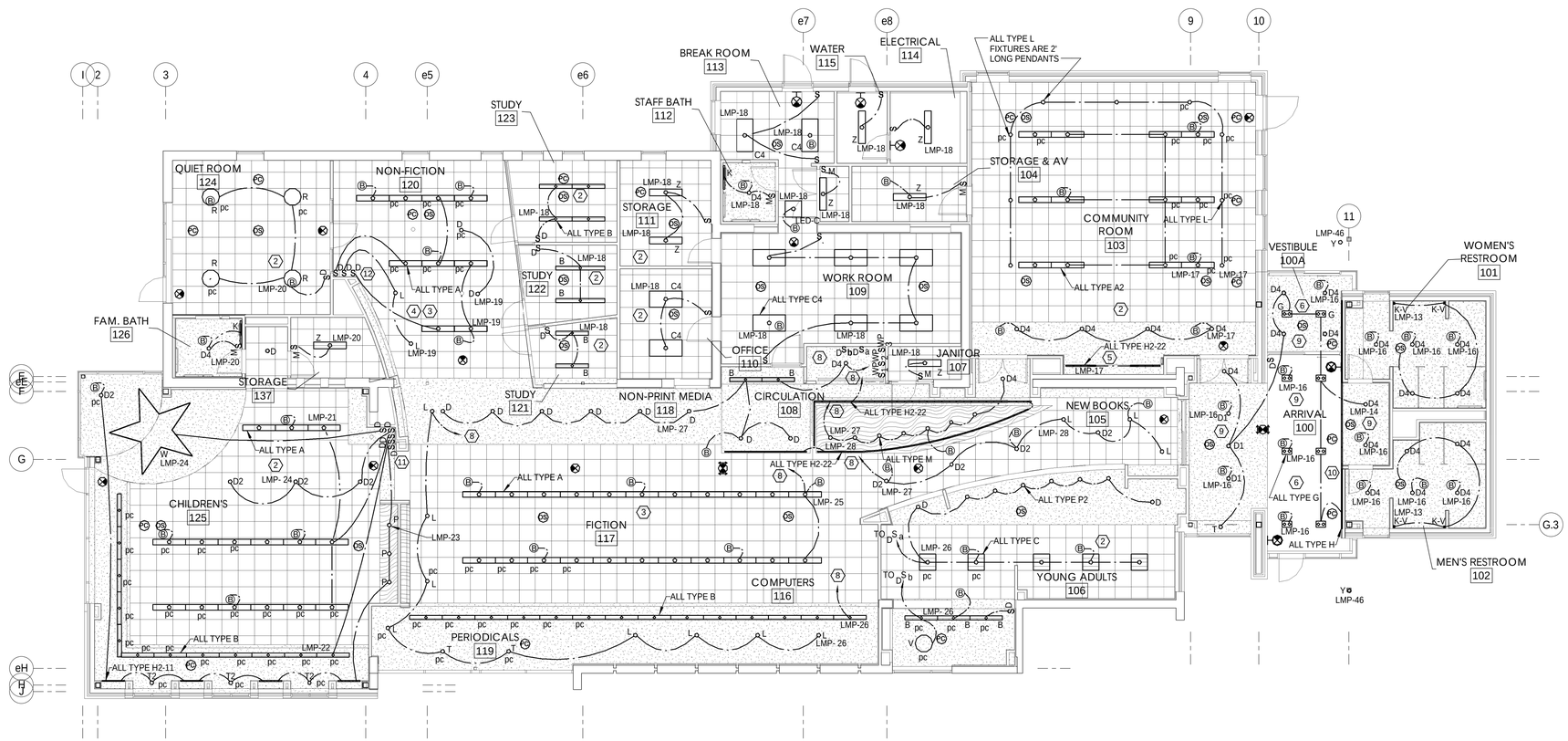

1 / E2.01 FIRST FLOOR LIGHTING PLAN
1/8" = 1'-0"

GRAPHIC SCALE

SCALE: 1/8" = 1'-0"

8' 4' 0 8' 16'

ENTEROS DESIGN

314 EXCHANGE ALLEY
PETERSBURG, VA 23804

804.861.1200 P
804.861.1253 F

All ideas, designs, arrangements and plans indicated or represented by this drawing are property of ENTEROS DESIGN, PC; created, evolved and developed for the sole use of this project. These ideas, design arrangements and/or plans shall not be used by or disclosed to any person, firm or corporation for any purpose without written permission from ENTEROS DESIGN, PC. Written dimensions on these drawings shall have precedence over scaled dimensions. Contractors shall verify and be responsible for all dimensions and conditions on the job. The Architect must be notified of any variations from the dimensions and conditions shown on these drawings. c 2016 ENTEROS DESIGN, PC

ASCENT ENGINEERING GROUP

4932 FRONTAGE ROAD NW
ROANOKE, VIRGINIA 24019
(540) 265-4444

D: ROS 15130 C: ?

WILLIAMSON ROAD LIBRARY

3837 Williamson Road, Roanoke, VA 24012

CONSTRUCTION DOCUMENTS

REVISIONS:

ELECTRICAL FIRST FLOOR LIGHTING PLAN

PROJ. NO.:156003 DRAWN BY:ROS
04.13.16

COMMONWEALTH OF VIRGINIA
RANDALL O. SPENCER
Lic. No. 29321
04/13/2016
PROFESSIONAL ENGINEER

NORTH

E2.01

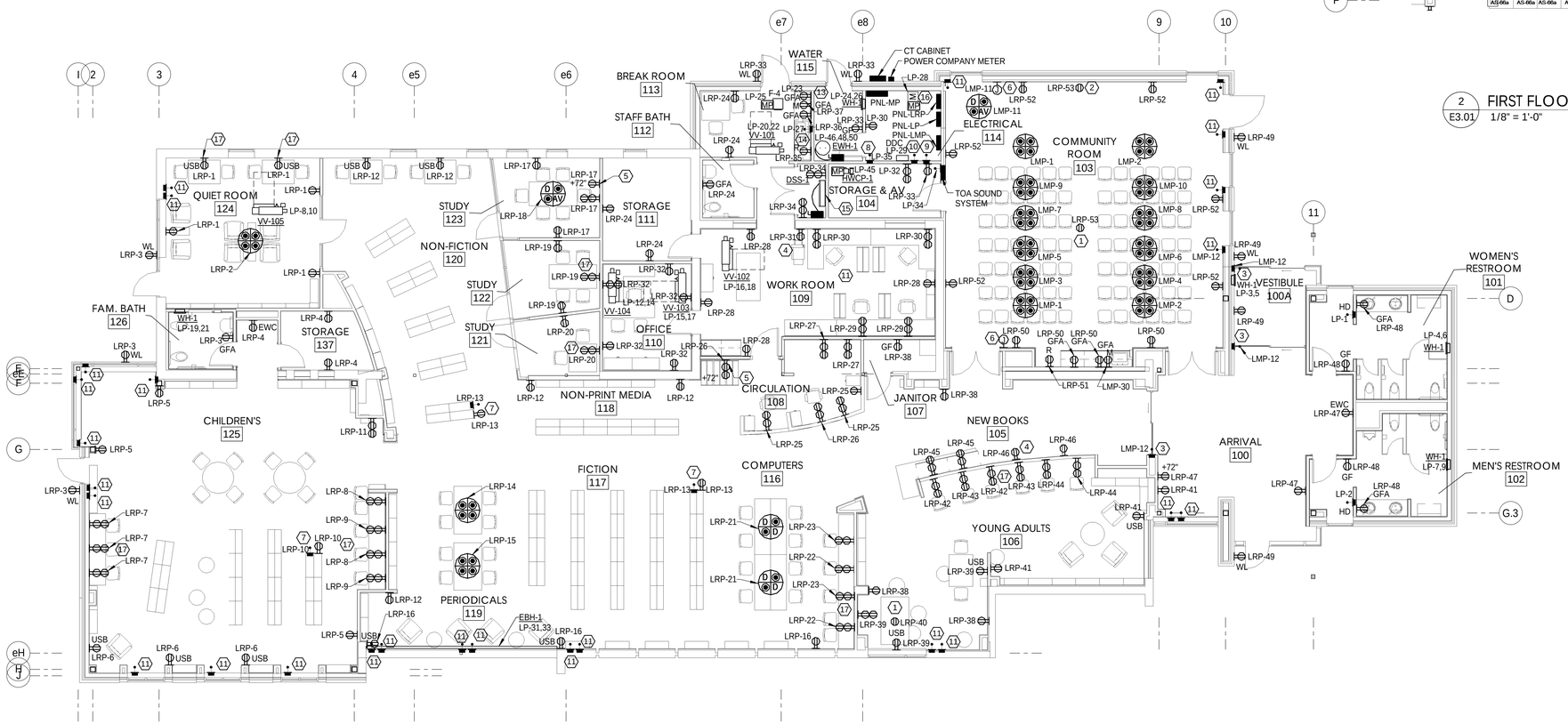

1 E3.01 FIRST FLOOR POWER PLAN
1/8" = 1'-0"

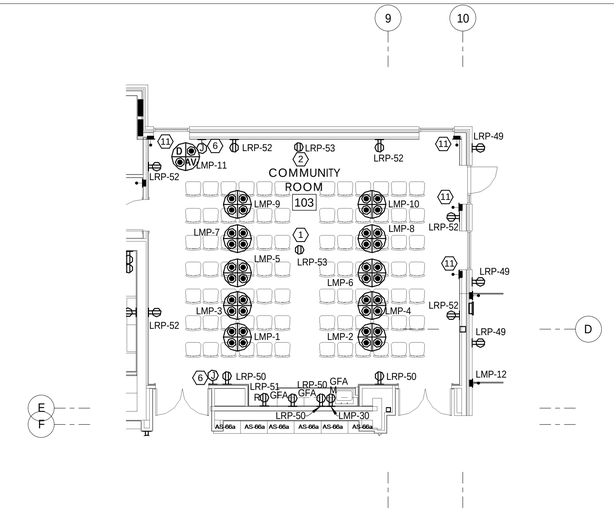

2 E3.01 FIRST FLOOR POWER PLAN ALTERNATE #6
1/8" = 1'-0"

SHEET NOTES:

1. RECEPTACLE FOR CEILING MOUNTED PROJECTOR. EXACT LOCATION SHALL BE COORDINATED WITH THE OWNER ON SITE.
2. CEILING MOUNTED RECEPTACLE FOR POWER TO MOTORIZED PROJECTION SCREEN. EXACT LOCATION SHALL BE COORDINATED WITH THE OWNER ON SITE.
3. DIRECT CONNECTION FOR POWERED DOOR OPERATOR. ALL WIRING TO DOOR OPERATOR SHALL BE CONCEALED.
4. DEDICATED COPIER RECEPTACLE.
5. DEDICATED TELEVISION RECEPTACLE.
6. JUNCTION BOX FOR MOTORIZED PROJECTION SCREEN CONTROLS. EXACT LOCATION OF BOX SHALL BE COORDINATED WITH THE OWNER PRIOR TO ROUGH IN.
7. DIRECT CONNECTION TO LIBRARY OPAC SYSTEM AND MONITOR. COORDINATE EXACT LOCATION OF CONDUIT STUBUP WITH END OF SHELVING FOR CONCEALMENT. PROVIDE CONCEALED DIRECT CONNECTION TO LIBRARY OPAC SYSTEM BEHIND BOOKSHELF PANEL. COORDINATE RECEPTALCE MOUNTING HEIGHT FOR MONITOR. COORDINATE ALL DEVICE LOCATIONS PRIOR TO INSTALLATION.
8. DIRECT CONNECTION TO FIRE ALARM CONTROL PANEL. CONNECT TO CIRCUIT LP-35.
9. DIRECT CONNECTION TO ACCESS CONTROL PANEL. CONNECT TO CIRCUIT LP-36.
10. DIRECT CONNECTION TO INTRUSION CONTROL PANEL. CONNECT TO CIRCUIT LP-37.
11. DIRECT CONNECTION TO ROLLER SHADES. PROVIDE TWO (2) WIRED CONNECTIONS TO THE SUN SHADE MOTOR. WIRING SHALL ORIGINATE FROM THE SHADE CONTROLLERS LOCATED ABOVE CEILING IN WORK ROOM 109. PROVIDE ONE (1) REMOTE SHADE CONTROLLER IN THIS ROOM WITH MULTIPLE SHADES AND MULTIPLE POSITION CONTROLS AND ALLOW MASTER STATION CONTROLLER AT CIRCULATION DESK TO HAVE ROOM CONTROL. WIRE CONTROLLERS TO THE MAIN SHADE CONTROL UNITS LOCATED ABOVE CEILING IN WORK ROOM 109. POWER SHADE CONTROLLERS WITH TWO (2) 120V-1P-20 AMP CIRCUITS FROM PANELBOARD LP WITH #12 WIRES IN 3/4" CONDUIT. USE CIRCUITS LP-11 AND LP-13.

SHEET NOTES CONTINUED:

13. RECEPTACLE FOR DISHWASHER.
14. GARBAGE DISPOSER WITH ON/OFF SWITCH IN WALL ABOVE COUNTER.
15. CONNECT INDOOR DSS-1 COOLING UNIT TO CIRCUIT OF OUTDOOR CONDENSING UNIT MATCHING POWER CIRCUIT WIRING.
16. MOTOR OPERATED DAMPER.
17. LOCATE RECEPTACLES IN THIS AREA ABOVE COUNTER TOPS AND TABLES.

GENERAL NOTES:

1. ALL RECEPTACLES SHALL BE TAMPER RESISTANT TYPE IN PUBLIC SPACES. REFER TO SPECIFICATION SECTION 26 27 26 FOR MATERIALS, TYPES, AND INSTALLATION REQUIREMENTS.
2. RECEPTACLES LOCATED ABOVE TABLES IN PUBLIC SPACES SHALL BE INSTALLED HORIZONTALLY.

GRAPHIC SCALE

SCALE: 1/8" = 1'-0"

8' 4' 0 8' 16'

ENTEROS DESIGN

314 EXCHANGE ALLEY
PETERSBURG, VA 23804

804.861.1200 P
804.861.1253 F

All ideas, designs, arrangements and plans indicated or represented by this drawing are property of ENTEROS DESIGN, PC; created, evolved and developed for the sole use of this project. These ideas, design arrangements and/or plans shall not be used by or disclosed to any person, firm or corporation for any purpose without written permission from ENTEROS DESIGN, PC. Written dimensions on these drawings shall have precedence over scaled dimensions. Contractors shall verify and be responsible for all dimensions and conditions on the job. The Architect must be notified of any variations from the dimensions and conditions shown on these drawings. c 2016 ENTEROS DESIGN, PC

ASCENT ENGINEERING GROUP

4932 FRONTAGE ROAD NW
ROANOKE, VIRGINIA 24019
(540) 265-4444

D: ROS 15130 C: ?

WILLIAMSON ROAD LIBRARY

3837 Williamson Road, Roanoke, VA 24012

CONSTRUCTION DOCUMENTS

REVISIONS:

ELECTRICAL FIRST FLOOR POWER PLAN

PROJ. NO.:156003 DRAWN BY:ROS
04.13.16

COMMONWEALTH OF VIRGINIA
RANDALL O. SPENCER
Lic. No. 29321
04/13/2016
PROFESSIONAL ENGINEER

NORTH

E3.01

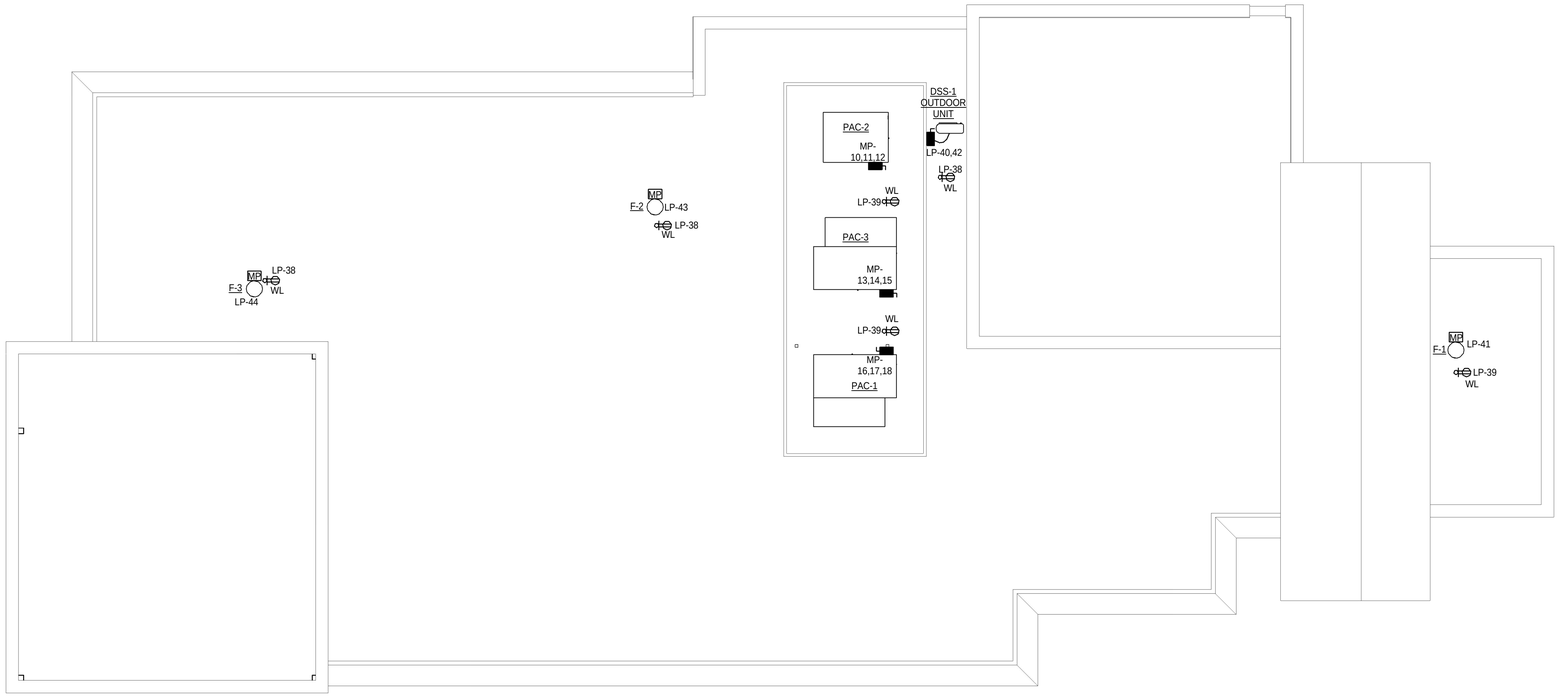

1
E3.02

ELECTRICAL ROOF PLAN

1/8" = 1'-0"

GENERAL ROOF PLAN NOTE:

1. ALL DISCONNECT SWITCHES ON ROOF SHALL BE NEMA-4X STAINLESS STEEL.

GRAPHIC SCALE

SCALE: 1/8" = 1'-0"

8' 4' 0 8' 16'

ENTEROS DESIGN

314 EXCHANGE ALLEY
PETERSBURG, VA 23804

804.861.1200 P
804.861.1253 F

All ideas, designs, arrangements and plans indicated or represented by this drawing are property of ENTEROS DESIGN, PC; created, evolved and developed for the sole use of this project. These ideas, design arrangements and/or plans shall not be used by or disclosed to any person, firm or corporation for any purpose without written permission from ENTEROS DESIGN, PC. Written dimensions on these drawings shall have precedence over scaled dimensions. Contractors shall verify and be responsible for all dimensions and conditions on the job. The Architect must be notified of any variations from the dimensions and conditions shown on these drawings.
c 2016 ENTEROS DESIGN, PC

ASCENT
ENGINEERING GROUP

4932 FRONTAGE ROAD NW
ROANOKE, VIRGINIA 24019
(540) 265-4444

D: ROS 15130 C: ?

WILLIAMSON ROAD LIBRARY

3837 Williamson Road, Roanoke, VA 24012

CONSTRUCTION DOCUMENTS

REVISIONS:

ELECTRICAL ROOF POWER PLAN

PROJ. NO.:156003 DRAWN BY:ROS
04.13.16

COMMONWEALTH OF VIRGINIA
RANDALL O. SPENCER
Lic. No. 29321
04/13/2016
PROFESSIONAL ENGINEER

NORTH

E3.02

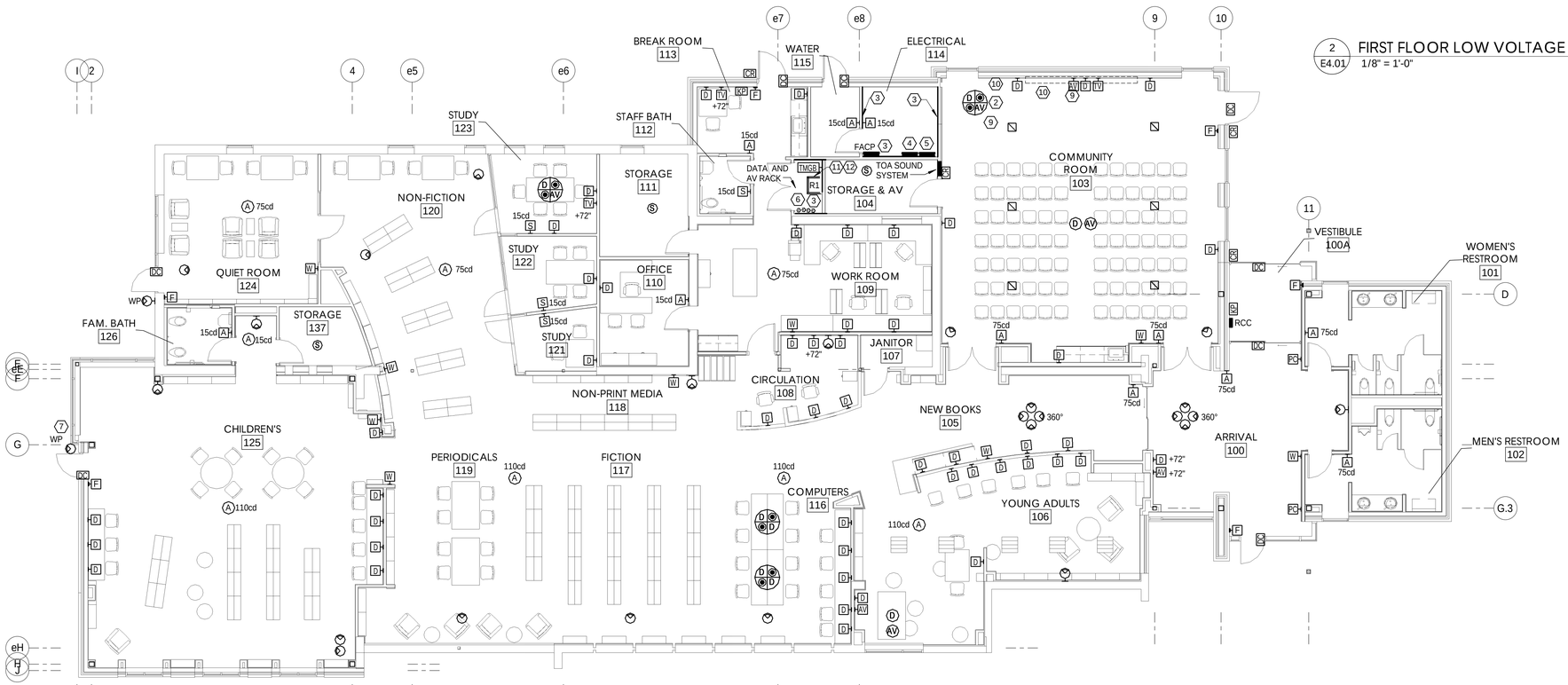

1 E4.01 FIRST FLOOR LOW VOLTAGE PLAN
1/8" = 1'-0"

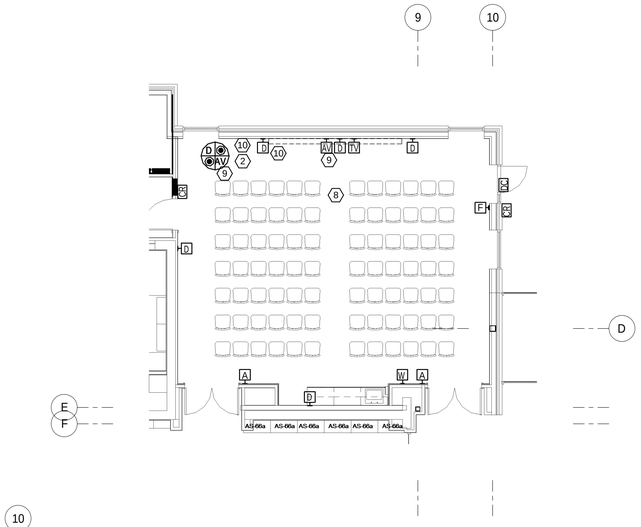

2 E4.01 FIRST FLOOR LOW VOLTAGE PLAN ALTERNATE #6
1/8" = 1'-0"

SHEET NOTES:

1. CEILING MOUTED AUDIO-VISUAL AND DATA DEVICES FOR CONNECTION TO PROJECTOR. EXACT LOCATION OF OUTLETS SHALL BE COORDINATED WITH OWNER ON SITE.
2. FLOOR BOX SHALL BE COORDINATED WITH LOCATION OF LECTERN ON SITE.
3. PROVIDE 4' WIDE, 8' TALL, 3/4" WIDE FIRE RETARDANT PLYWOOD ON THREE WALLS AS INDICATED. PLYWOOD SHALL BE 6" ABOVE FINISHED FLOOR AND EXTEND UP 8' AND COVER THE THREE WALLS.
4. CONTROL PANEL FOR ACCESS CONTROL SYSTEM.
5. CONTROL PANEL FOR SECURITY SYSTEM.
6. FOUR (4) 4" COMMUNICATIONS CONDUITS FOR DATA, TELEPHONE, AND COAXIAL TELEVISION SERVICE. REFER TO SITE PLAN FOR FULL CONDUIT ROUTING.
7. SECURITY CAMERA SHALL BE MOUNTED TO UNDERSIDE OF SOFFIT.
8. PROVIDE ALL DEVICES INDICATED IN THE BASE BID COMMUNITITY ROOM IN THE COMMUNITITY ROOM NOTED FOR ALTERNATE #6.
9. PROVIDE MICROPHONE JACK IN THIS OUTLET.
10. PROVIDE CONDUIT AND JUNCTION BOX IN CEIILING FOR PROJECTOR SCREEN. PROVIDE JUNCTION BOX FOR SCREEN LOW VOLTAGE CONTROL SWITCH TO LEFT OF SCREEN RECESSED IN WALL BEHIND THE PODIUM.
11. DATA RACK TURNED SIDEWAYS WITH VERTICAL WIRE MANAGEMENT ON THE OUTSIDE POST. RACK SHALL BE PANDUIT CMR19X84 SERIES FLOOR MOUNTED RACK. BRACE RACK TO WALL AT THE TOP AND BOTTOM.
12. SEE ELECTRICAL ROOM FOR OTHER LOW VOLTAGE EQUIPMENT.

GRAPHIC SCALE

SCALE: 1/8" = 1'-0"

8' 4' 0 8' 16'

ENTEROS DESIGN
314 EXCHANGE ALLEY
PETERSBURG, VA 23804
804.861.1200 P
804.861.1253 F

All ideas, designs, arrangements and plans indicated or represented by this drawing are property of ENTEROS DESIGN, PC; created, evolved and developed for the sole use of this project. These ideas, design arrangements and/or plans shall not be used by or disclosed to any person, firm or corporation for any purpose without written permission from ENTEROS DESIGN, PC. Written dimensions on these drawings shall have precedence over scaled dimensions. Contractors shall verify and be responsible for all dimensions and conditions on the job. The Architect must be notified of any variations from the dimensions and conditions shown on these drawings.
c 2016 ENTEROS DESIGN, PC

ASCENT ENGINEERING GROUP
4932 FRONTAGE ROAD NW
ROANOKE, VIRGINIA 24019
(540) 265-4444

D:ROS 15130 C: ?

WILLIAMSON ROAD LIBRARY

3837 Williamson Road, Roanoke, VA 24012

CONSTRUCTION DOCUMENTS

REVISIONS:

ELECTRICAL FIRST FLOOR LOW VOLTAGE PLAN

PROJ. NO.:156003 DRAWN BY:ROS
04.13.16

COMMONWEALTH OF VIRGINIA
RANDALL O. SPENCER
Lic. No. 29321
04/13/2016
PROFESSIONAL ENGINEER

NORTH

E4.01

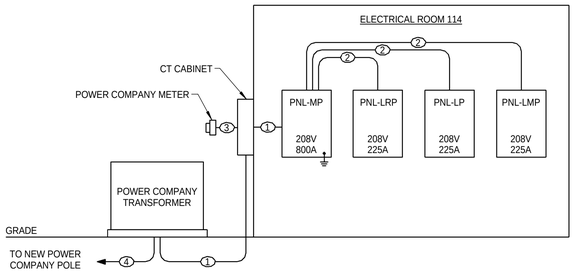

RISER NOTES:

1. 3 (4-#500 AND 1-#3/0 EGC IN 4" CONDUIT).
2. 4-#4/0 AND 1-#2 EGC IN 2-1/2" CONDUIT.
3. ONE (1) 1.25" EMPTY CONDUIT FOR METER WIRING BY THE POWER COMPANY.
4. TWO 5" CONDUITS FOR POWER COMPANY UNDERGROUND PRIMARY.

POWER RISER DIAGRAM

NO SCALE

BRANCH CIRCUIT WIRE SIZE TABLE

DEVICE RATING	RUNS	PHASE	NEUT.	EGC	CONDUIT
20	1	#12	#12	#12	3/4"
30	1	#10	#10	#10	3/4"
40	1	#8	#8	#10	3/4"
50	1	#6	#6	#10	1"
60	1	#4	#4	#10	1-1/4"
70	1	#4	#4	#8	1-1/4"
80	1	#3	#3	#8	1-1/4"
90	1	#2	#2	#8	1-1/2"
100	1	#1	#1	#8	1-1/2"
125	1	#1/0	#1/0	#6	2"
150	1	#1/0	#1/0	#6	2"
200	1	#3/0	#3/0	#6	2-1/2"
225	1	#4/0	#4/0	#4	2-1/2"
250	1	#250	#250	#4	3"
300	1	#350	#350	#4	3-1/2"
350	1	#500	#500	#3	4"
400	1	#500	#500	#3	4"
450	2	#4/0	#4/0	#2	2-1/2"
500	2	#250	#250	#2	3"
600	2	#350	#350	#1	3-1/2"
700	2	#500	#500	#1/0	4"
800	3	#350	#350	#1/0	3-1/2"

NOTES:

1. WIRE SIZING IS BASED ON 2010 NEC TABLES 250.66 AND 310.16.
2. DEVICE RATING REPRESENTS THE MAXIMUM SIZE OVERCURRENT PROTECTION DEVICE FOR WHICH THE ASSOCIATED WIRE MAY BE UTILIZED.
3. UNLESS OTHERWISE NOTED ON THE DRAWINGS OR PER MANUFACTURER DATA SHEETS, ALL BRANCH CIRCUIT AND FEEDER CIRCUITS SHALL HAVE NEUTRAL CONDUCTOR CORRESPONDING TO THE RESPECTIVE CIRCUIT SIZES NOTED ABOVE.

PANEL: MP

LOCATION: ELECTRICAL 114 **VOLTS:** 120/208 Wye **MAINS RATING:** 800 A
SUPPLY FROM: **PHASES:** 3 **NEUTRAL RATING:** 800 A
PNL TYPE: HCP **WIRES:** 4 **MCB RATING:** 800 A
ENCLOSURE: SURFACE **KAIC RATING:** 100

CKT	CIRCUIT DESCRIPTION	TRIP	POLES	PHASE A (kVA)		PHASE B (kVA)		PHASE C (kVA)		POLES	TRIP	CIRCUIT DESCRIPTION	CKT
1				13.9	0					1	20 A	SPARE	22
2	LRP	200 A	3			13.6	0			1	20 A	SPARE	23
3								11.9	0	1	20 A	SPARE	24
4				14.9	0					1	20 A	SPARE	25
5	LP	200 A	3			15.2	0			1	20 A	SPARE	26
6								12.6	0	1	20 A	SPARE	27
7				10.6	0					1	20 A	SPARE	28
8	LMP	200 A	3			6.6	0			1	20 A	SPARE	29
9								6.6	0	1	20 A	SPARE	30
10				11	0					1	20 A	SPARE	31
11	PAC-2 ON ROOF	125 A	3			11	0			--	--	SPACE	32
12								11	0	--	--	SPACE	33
13				17.7	0					--	--	SPACE	34
14	PAC-3 ON ROOF	175 A	3			17.7	0			--	--	SPACE	35
15								17.7	0	--	--	SPACE	36
16				24.3	0					--	--	SPACE	37
17	PAC-1 ON ROOF	250 A	3			24.3	0			--	--	SPACE	38
18								24.3	0	--	--	SPACE	39
19				0	0								40
20	SPARE	100 A	3			0	0			3	80 A	SPD	41
21								0	0				42
			TOTAL LOAD:	92 kVA		88 kVA		84 kVA					
			TOTAL AMPS:	776 A		743 A		701 A					

LEGEND:
KAIC STANDS FOR 1000 AMPS INTERRUPTING CURRENT.

NOTES:
1. 208V-3P-800 AMP BREAKER SHALL BE 100% RATED.

PANEL: LP

LOCATION: ELECTRICAL 114 **VOLTS:** 120/208 Wye **MAINS RATING:** 225 A
SUPPLY FROM: MP **PHASE:** 3 **NEUTRAL...** 225 A
PNL TYPE: NQ **WIRE:** 4 **KAIC RATING:** 10
ENCLOSURE: SURFACE

CKT	DESCRIPTION	TRIP	POLES	A		B		C		POLES	TRIP	DESCRIPTION	CKT
1	HAND DRYER WOMEN'S RESTROOM 101	20 A	1	1.2	1.2					1	20 A	HAND DRYER MEN'S RESTROOM 102	2
3	WALL HEATER VESTIBULE 100A	20 A	2			1	1			2	20 A	WALL HEATER WOMEN'S RESTROOM 101	4
5								1	1				6
7	WALL HEATER MEN'S RESTROOM 102	20 A	2	1	1.3					2	20 A	VAV 105 QUIET ROOM 123	8
9						1	1.3						10
11	SHADE CONTROLLER ROOM 109	20 A	1					0.5	1.1	2	20 A	VAV OFFICE 110	12
13	SHADE CONTROLLER ROOM 109	20 A	1	0.5	1.1								14
15	VAV OFFICE 110	20 A	2			0.8	1.6			2	20 A	VAV WORKROOM 109	16
17								0.8	1.6				18
19	WALL HEATER FAM BATH 126	20 A	2	1	0.8					2	20 A	VAV BREAK ROOM 113	20
21						1	0.8						22
23	REC. DISHWASER BREAK ROOM 113	20 A	1					0.5	1	2	20 A	WALL HEATER WATER 115	24
25	FAN F-4 BREAK ROOM 113	20 A	1	0.5	1								26
27	DISPOSER BREAK ROOM 113	20 A	1			0.4	0.1			1	20 A	MOD ELECTRICAL 114	28
29	DDC ELECTRICAL 114	20 A	1					0.5	0.2	1	20 A	REC. ELECTRICAL 114	30
31	ELECTRIC BASEBOARD HEAT	25 A	2	1.4	0.4					1	20 A	REC. STORAGE & AV 104	32
33						1.4	0.5			1	20 A	SOUND SYSTEM STORAGE & AV 104	34
35	FIRE ALARM ELECTRICAL 114	20 A	1					0.5	0.5	1	20 A	ACCESS CONTROL ELECTRICAL 114	36
37	INTRUSION ALARM ELECTRICAL 114	20 A	1	0.5	0.5					1	20 A	REC. ON ROOF	38
39	REC. ON ROOF	20 A	1			0.5	1.7			2	30 A	DSS-1 (OUTDOOR AND INDOOR)	40
41	FAN F-1	20 A	1					0.4	1.7				42
43	FAN F-2	20 A	1	0.5	0.5					1	20 A	FAN F-3	44
45	HVAC	20 A	1			0.2	2			3	20 A	EWH-1 WATER 115	46
47	Spare	20 A	1					0	2				48
49	Spare	20 A	1	0	2								50
51	Spare	20 A	1			0	0			1	20 A	Spare	52
53	Spare	20 A	1					0	0	1	20 A	Spare	54
		TOTAL LOAD:		15 kVA		15 kVA		13 kVA					
		TOTAL AMPS:		131 A		130 A		109 A					

LEGEND:
KAIC STANDS FOR 1000 AMPS INTERRUPTING CURRENT.

NOTES:

PANEL: LMP

LOCATION: ELECTRICAL 114 **VOLTS:** 120/208 Wye **MAINS RATING:** 225 A
SUPPLY FROM: MP **PHASE:** 3 **NEUTRAL...** 225 A
PNL TYPE: NQ **WIRE:** 4 **KAIC RATING:** 10
ENCLOSURE: SURFACE

CKT	DESCRIPTION	TRIP	POLES	A		B		C		POLES	TRIP	DESCRIPTION	CKT
1	FLOOR BOX REC. ROOM 103	20 A	1	1.6	1.6					1	20 A	FLOOR BOX REC. ROOM 103	2
3	FLOOR BOX REC. ROOM 103	20 A	1			0.8	0.8			1	20 A	FLOOR BOX REC. ROOM 103	4
5	FLOOR BOX REC. ROOM 103	20 A	1					0.8	0.8	1	20 A	FLOOR BOX REC. ROOM 103	6
7	FLOOR BOX REC. ROOM 103	20 A	1	0.8	0.8					1	20 A	FLOOR BOX REC. ROOM 103	8
9	FLOOR BOX REC. ROOM 103	20 A	1			0.8	0.8			1	20 A	FLOOR BOX REC. ROOM 103	10
11	FLOOR BOX REC. ROOM 103	20 A	1					0.8	0.8	1	20 A	POWER DOOR OPERATORS	12
13	LIGHTS ROOMS 101, 102	20 A	1	0.2	0.9					1	20 A	LIGHTS ROOMS 100, 100A	14
15	EXIT SIGNS	20 A	1			0.1	0.5			1	20 A	WALK-THROUGH LIGHTS ON BATTERY	16
17	LIGHTS COMMUNITY ROOM 103	20 A	1					0.9	1.5	1	20 A	LIGHTS ROMS109 - 115, 121 -123	18
19	LIGHTS NON-FICTION 120	20 A	1	0.6	0.7					1	20 A	LIGHTS ROOMS 124, 124, 137	20
21	LIGHTS CHILDREN'S 125	20 A	1			0.8	0.6			1	20 A	LIGHTS CHILDREN'S 125	22
23	LIGHTS CHILDREN'S 125	20 A	1					0.1	0.2	1	20 A	LIGHTS CHILDREN'S 125	24
25	LIGHTS AREAS 116 117	20 A	1	1.1	1.4					1	20 A	LIGHTS AREAS 106 116 117	26
27	LIGHTS NEW BOOKS 105	20 A	1			0.7	0.4			1	20 A	LIGHTS CIRCULATION 108	28
29	Spare	20 A	1					0	0.2	1	20 A	REC. COMMUNITY ROOM 103	30
31	Spare	20 A	1	0	0					1	20 A	Spare	32
33	Spare	20 A	1			0	0			1	20 A	Spare	34
35	Spare	20 A	1					0	0	1	20 A	Spare	36
37	Spare	20 A	1	0	0					1	20 A	Spare	38
39	Spare	20 A	1			0	0			1	20 A	Spare	40
41	Spare	20 A	1					0	0.1	1	20 A	SIGN NARROW FLOOD LIGTHS	42
43	Spare	20 A	1	0	0.8					1	20 A	POLE LIGHTS PARKING LOT	44
45	Spare	20 A	1			0	0.2			1	20 A	WALL MOUNTED BUILDING LIGHTS	46
47	Spare	20 A	1					0	0.2	1	20 A	POLE LIGHTS ART WALK	48
49	Spare	20 A	1	0	0.2					1	20 A	POLE LIHGHT OUTSIDE READING	50
51	Spare	20 A	1			0	0.2			1	20 A	UP LIGHT OUTSIDE READING	52
53	Spare	20 A	1					0	0.2	1	20 A	SIGN POWER	54
		TOTAL LOAD:		11 kVA		7 kVA		7 kVA					
		TOTAL AMPS:		88 A		55 A		55 A					

LEGEND:
KAIC STANDS FOR 1000 AMPS INTERRUPTING CURRENT.

NOTES:

PANEL: LRP

LOCATION: ELECTRICAL 114 **VOLTS:** 120/208 Wye **MAINS RATING:** 225 A
SUPPLY FROM: MP **PHASE:** 3 **NEUTRAL...** 225 A
PNL TYPE: NQ **WIRE:** 4 **KAIC RATING:** 10
ENCLOSURE: SURFACE

CKT	DESCRIPTION	TRIP	POLES	A		B		C		POLES	TRIP	DESCRIPTION	CKT
1	REC. QUIET ROOM 124	20 A	1	0.9	0.8					1	20 A	FLOOR BOX REC. QUIET ROOM 124	2
3	EXTERIOR RECEPTACLES	20 A	1			0.7	0.5			1	20 A	REC. CHILDREN'S 125	4
5	REC. CHILDREN'S 125	20 A	1					0.5	0.5	1	20 A	REC. CHILDREN'S 125	6
7	REC. CHILDREN'S 125	20 A	1	1.1	0.7					1	20 A	REC. CHILDREN'S 125	8
9	REC. CHILDREN'S 125	20 A	1			0.7	0.2			1	20 A	FLOOR BOX REC. CHILDREN'S 125	10
11	REC. CHILDREN'S 125	20 A	1					0.4	0.9	1	20 A	REC. NON-FICTION 120	12
13	FLOOR BOX REC. ROOM 117	20 A	1	0.4	0.8					1	20 A	FLOOR BOX REC. ROOM 117	14
15	FLOOR BOX REC. ROOM 117	20 A	1			0.8	0.5			1	20 A	REC. PERIODICALS 119	16
17	REC. STUDY 123	20 A	1					0.9	0.8	1	20 A	FLOOR BOX REC. ROOM 123	18
19	REC. STUDY 122	20 A	1	0.7	0.5					1	20 A	REC. STUDY 121	20
21	FLOOR BOX REC. ROOM 116	20 A	1			0.8	0.7			1	20 A	REC. COMPUTERS 116	22
23	REC. COMPUTERS 116	20 A	1					0.7	0.9	1	20 A	REC. STORAGE 111	24
25	REC. CIRCULATION 108	20 A	1	0.9	0.7					1	20 A	REC. CIRCULATION 108	26
27	REC. CIRCULATION 108	20 A	1			0.7	0.7			1	20 A	REC. WORK ROOM 109	28
29	REC. WORK ROOM 109	20 A	1					0.7	0.7	1	20 A	REC. WORK ROOM 109	30
31	REC. WORK ROOM 109	20 A	1	1.2	1.1					1	20 A	REC. OFFICE 110	32
33	EXTERIOR RECEPTACLES	20 A	1			0.7	2			1	20 A	REC. ELECTRICAL 114	34
35	REC. BREAK ROOM 113	20 A	1					1	0.2	1	20 A	REC. BREAK ROOM 113	36
37	REC. BREAK ROOM 113	20 A	1	0.5	0.7					1	20 A	REC. JANITOR 107	38
39	REC. YOUNG ADULTS 106	20 A	1			0.7	0.2			1	20 A	REC. YOUNG ADULTS 106	40
41	REC. YOUNG ADULTS 106	20 A	1					0.5	0.7	1	20 A	REC. YOUNG ADULTS 106	42
43	REC. YOUNG ADULTS 106	20 A	1	0.7	0.7					1	20 A	REC. YOUNG ADULTS 106	44
45	REC. NEW BOOKS 105	20 A	1			0.7	0.4			1	20 A	REC. NEW BOOKS 105	46
47	REC. ARRIVAL 100	20 A	1					0.5	0.7	1	20 A	REC. MEN'S RESTROOM 102	48
49	EXTERIOR RECEPTACLES	20 A	1	0.7	0.7					1	20 A	REC. COMMUNITY ROOM 103	50
51	REC. COMMUNITY ROOM 103	20 A	1			1	1.4			1	20 A	REC. COMMUNITY ROOM 103	52
53	REC. COMMUNITY ROOM 103	20 A	1					1.1	0	1	20 A	SPARE	54
		TOTAL LOAD:		14 kVA		14 kVA		12 kVA					
		TOTAL AMPS:		118 A		116 A		99 A					

LEGEND:
KAIC STANDS FOR 1000 AMPS INTERRUPTING CURRENT.

NOTES:

ENTEROS DESIGN
314 EXCHANGE ALLEY
PETERSBURG, VA 23804
804.861.1200 P
804.861.1253 F

All ideas, designs, arrangements and plans indicated or represented by this drawing are property of ENTEROS DESIGN, PC; created, evolved and developed for the sole use of this project. These ideas, design arrangements and/or plans shall not be used by or disclosed to any person, firm or corporation for any purpose without written permission from ENTEROS DESIGN, PC. Written dimensions on these drawings shall have precedence over scaled dimensions. Contractors shall verify and be responsible for all dimensions and conditions on the job. The Architect must be notified of any variations from the dimensions and conditions shown on these drawings.
c 2016 ENTEROS DESIGN, PC

ASCENT ENGINEERING GROUP
4932 FRONTAGE ROAD NW
ROANOKE, VIRGINIA 24019
(540) 265-4444

D:ROS 15130 C: ?

WILLIAMSON ROAD LIBRARY
3837 Williamson Road, Roanoke, VA 24012

CONSTRUCTION DOCUMENTS

REVISIONS:

ELECTRICAL PANELBOARD SCHEDULES

PROJ. NO.:156003 DRAWN BY:ROS
04.13.16

COMMONWEALTH OF VIRGINIA
RANDALL O. SPENCER
Lic. No. 29321
04/13/2016
PROFESSIONAL ENGINEER

E5.01

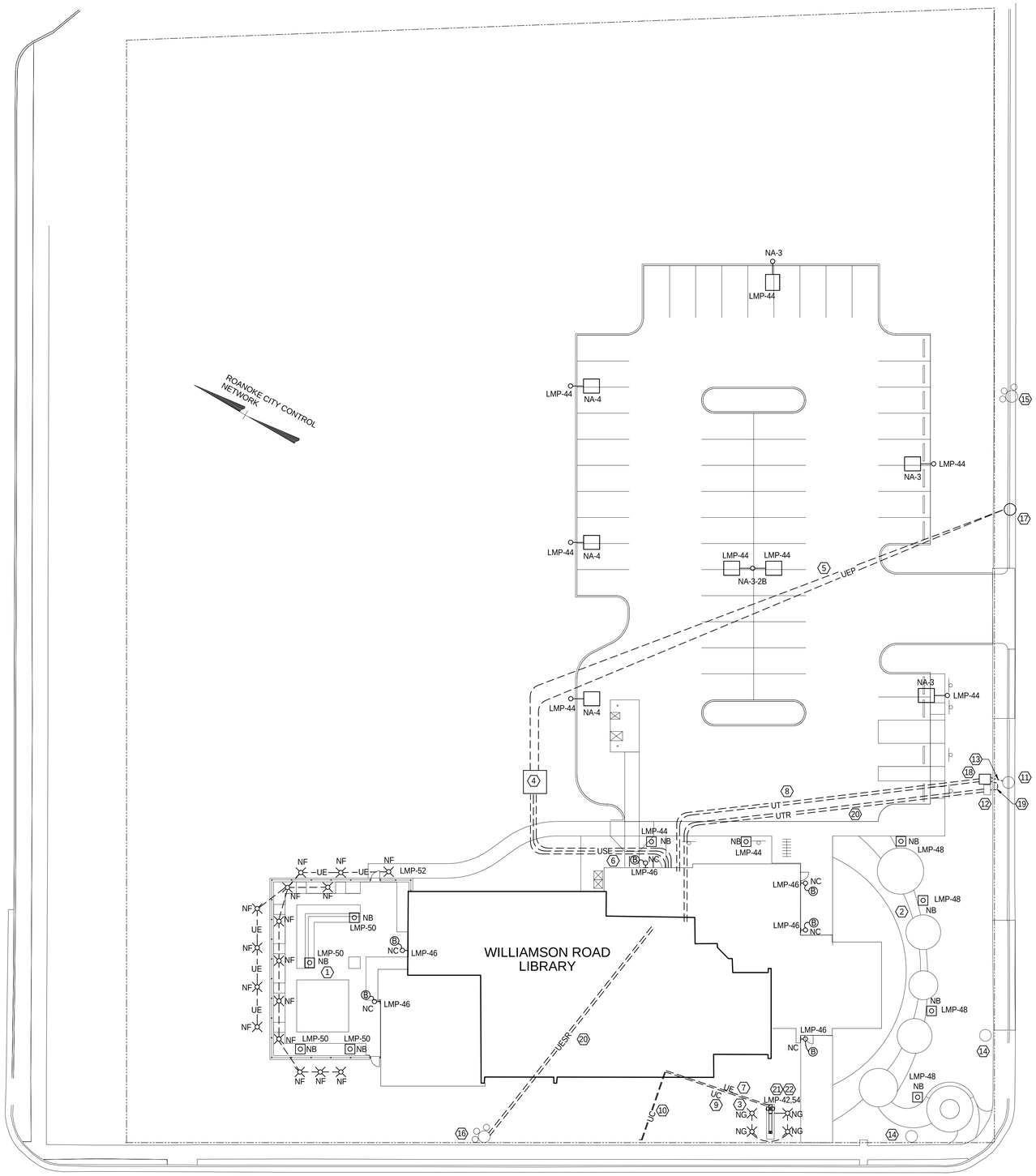

SITE PLAN

SCALE: 1" = 20'

EXTERIOR POLE LIGHT AND BOLLARD LIGHTING SCHEDULE

SYMBOL	VOLTAGE	LABEL	MANUFACTURER	CATALOG NUMBER	DESCRIPTION	LAMP	WATTS
	120	NA-3	BEACON AMERICAN LIGHT POLE	VP-S-30NB-90-4K-T3-UNV-RA-XXX/POLE: SNS-20-40-11-AB-PC(XX)-DM19	ONE PIECE OPTICAL CARTRIDGE SYSTEM CONSISTING OF AN LED ENGINE, LED LAMPS, FULL CUTOFF OPTICS, GASKET, STAINLESS STEEL BEZEL AND TYPE 3 DISTRIBUTION. FIXTURE ELECTRICAL COMPARTMENTS SHALL CONTAIN ALL LED DRIVER COMPONENTS AND SHALL BE PROVIDED WITH A PUSH-BUTTON TERMINAL BLOCK FOR AC POWER CONNECTIONS COMPLETE WITH ON-BOARD SURGE PROTECTION. PROVIDE A 20'-0" SQUARE POLE. ARCHITECT SHALL MAKE FINAL FIXTURE AND POLE COLOR SELECTION.	LED	90
	120	NA-3-2B	BEACON AMERICAN LIGHT POLE	VP-S-30NB-90-4K-T3-XXX-RA-XXX/POLE: SNS-B-20-40-AB-PC(XX)-DM28 DUAL HEAD	ONE PIECE OPTICAL CARTRIDGE SYSTEM CONSISTING OF AN LED ENGINE, LED LAMPS, FULL CUTOFF OPTICS, GASKET, STAINLESS STEEL BEZEL AND TYPE 3 DISTRIBUTION WITH DUAL HEADS AT 180 DEGREES. FIXTURE ELECTRICAL COMPARTMENTS SHALL CONTAIN ALL LED DRIVER COMPONENTS AND SHALL BE PROVIDED WITH A PUSH-BUTTON TERMINAL BLOCK FOR AC POWER CONNECTIONS COMPLETE WITH ON-BOARD SURGE PROTECTION. PROVIDE 20'-0" SQUARE POLE WITH DUAL ARMS AT 180 DEGREES. ARCHITECT SHALL MAKE FINAL FIXTURE AND POLE COLOR SELECTION.	LED	180
	120	NA-4	BEACON AMERICAN LIGHT POLE	VP-S-30NB-90-4K-T4-UNV-RA-XXX/POLE: SNS-20-40-11-AB-PC(XX)-DM19	ONE PIECE OPTICAL CARTRIDGE SYSTEM CONSISTING OF AN LED ENGINE, LED LAMPS, FULL CUTOFF OPTICS, GASKET, STAINLESS STEEL BEZEL AND TYPE 4 DISTRIBUTION. FIXTURE ELECTRICAL COMPARTMENTS SHALL CONTAIN ALL LED DRIVER COMPONENTS AND SHALL BE PROVIDED WITH A PUSH-BUTTON TERMINAL BLOCK FOR AC POWER CONNECTIONS COMPLETE WITH ON-BOARD SURGE PROTECTION. PROVIDE A 20'-0" SQUARE POLE. ARCHITECT SHALL MAKE FINAL FIXTURE AND POLE COLOR SELECTION.	LED	90
	120	NB	BEACON AMERICAN LIGHT POLE	SLD-NL-24NB-27-4K-UNV-T5QM-FLT-FTS-XXX/POLE: RNS-10-40-11-AB-PC(XX)OT	ONE PIECE OPTICAL CARTRIDGE SYSTEM CONSISTING OF AN LED ENGINE, LED LAMPS, FULL CUTOFF OPTICS, GASKET AND STAINLESS STEEL BEZEL. THE UPPER CHAMBER LID SHALL BE TOPPED WITH A CAST ALUMINUM CAP FASTENED TO OPTICAL CHAMBER LED DRIVER COMPONENTS AND SHALL BE PROVIDED WITH A PUSH-BUTTON TERMINAL BLOCK FOR AC POWER CONNECTIONS COMPLETE WITH ON BOARD SURGE PROTECTION. PROVIDE A 10'-0" ROUND POLE. ARCHITECT SHALL MAKE FINAL FIXTURE AND POLE COLOR SELECTION.	LED	55
	120	NC	KIM LIGHTING	SW1-18L3KUV-XX	WALL MOUNTED LED, HEMISPHERICAL HALF CYLINDER, ONE-PIECE CAST, LOW-COPPER (<0.6 CU) ALUMINUM ALLOY FACTORY MOUNTED TO REMOVABLE HARNESS WITHIN FIXTURE HEAD WALL MOUNTED WITH REMOVABLE ELECTRICAL HARNESS WITH LED PANEL AND DRIVER. ARCHITECT SHALL MAKE FINAL FIXTURE COLOR SELECTION.	LED	18
	120	NF	SLV LIGHTING NORTHERN AMERICAN	5231525U/794002U	EXTERIOR ABOVE GROUND MOUNTED ALUMINUM LED UNIT 6.6" SPIKE- 2800 K LED GX53 LAMP. ARCHITECT SHALL MAKE FINAL FIXTURE COLOR SELECTION.	LED	9
	120	NG	ENVOY LIGHTING	LEDMPAL15	EXTERIOR ABOVE GROUND MOUNTED CAST ALUMINUM, LED UNIT (4.37"X3.25"X 1.5") WITH GROUND TRUNION MOUNT, YOKE, POLYCARBONATE LENS, NARROW FLOOD, HIGH EFFICIENCY DRIVER, 50,000 HOUR RATED LAMP LIFE, 1450 LUMEN LED PACKAGE, CRI GREATER THAN 80, IP 65 RATED, WET LOCATION LISTED. ARCHITECT SHALL MAKE FINAL FIXTURE COLOR SELECTION.	LED	15

NOTES THIS SHEET:

1. NB AND NF LIGHT FIXTURE TYPES IN CHILDREN'S GARDEN SHALL NOT BE INSTALLED AS PART OF ALTERNATE #3.
2. NB LIGHT FIXTURE TYPES IN ART WALK SHALL NOT BE INSTALLED AS PART OF ALTERNATE #2.
3. THE DATA WIRING AND TYPE NG LIGHTS SHALL NOT BE INSTALLED AT SIGN AS PART OF ALTERNATE #1.
4. POWER COMPANY TRANSFORMER AND TRANSFORMER PAD.
5. UNDERGROUND PRIMARY ELECTRICAL SERVICE (TWO (2) 5" CONDUITS).
6. UNDERGROUND SECONDARY ELECTRICAL SERVICE (THREE (3) 3" CONDUITS WITH CONDUCTORS - SEE POWER RISER).
7. UNDERGROUND ELECTRICAL.
8. TWO (2) 4" UNDERGROUND CONDUITS FOR SERVICE PROVIDER'S CABLES (TELEPHONE AND CATV).
9. UNDERGROUND DATA CONDUIT (1.25") FOR SIGN.
10. UNDERGROUND COMMUNICATION CONDUITS TWO (2) 4" FOR SERVICE PROVIDER CABLES (FIBER OPTIC CABLES).

NOTES THIS SHEET CONTINUED:

11. EXISTING POWER COMPANY POLE TELEPHONE AND CATV TURNING DOWN TO THE GROUND.
12. EXISTING TELEPHONE COMPANY PEDESTAL.
13. ONE (1) 4" CONDUIT TO TURN UP POLE FOR CATV SERVICE CABLES.
14. EXISTING POWER COMPANY POLE.
15. EXISTING POWER COMPANY POLE WITH TRANSFORMERS TO REMAIN.
16. EXISTING POWER COMPANY POLE WITH TRANSFORMERS SERVING THE BUILDING. TRANSFORMERS CAN BE REMOVED AFTER THE NEW SERVICE IS OPERATIONAL.
17. NEW POWER COMPANY POLE FOR ELECTRICAL PRIMARY SERVICE TO LIBRARY.
18. COMMUNICATION QUAZITE POLYMER HAND HOLE (30"WX 40"LX 30"D). LABEL HAND HOLE AS "COMMUNICATION".
19. ONE (1) 4" CONDUIT TO TURN INTO TELEPHONE GROUND MOUNTED PEDESTAL.
20. CONDUITS TO BE REMOVED.
21. PROVIDE PHOTOCELL FOR SIGN POWER.
22. PROVIDE PHOTOCELL FOR SIGN FLOOD LIGHT POWER.

GRAPHIC SCALE

SCALE: 1" = 20'-0"

20' 10' 0 20' 40'

ENTEROS DESIGN

314 EXCHANGE ALLEY
PETERSBURG, VA 23804

804.861.1200 P
804.861.1253 F

All ideas, designs, arrangements and plans indicated or represented by this drawing are property of ENTEROS DESIGN, PC; created, evolved and developed for the sole use of this project. These ideas, design arrangements and/or plans shall not be used by or disclosed to any person, firm or corporation for any purpose without written permission from ENTEROS DESIGN, PC. Written dimensions on these drawings shall have precedence over scaled dimensions. Contractors shall verify and be responsible for all dimensions and conditions on the job. The Architect must be notified of any variations from the dimensions and conditions shown on these drawings.
c 2016 ENTEROS DESIGN, PC

ASCENT ENGINEERING GROUP

4932 FRONTAGE ROAD NW
ROANOKE, VIRGINIA 24019
(540) 265-4444

D: ROS 15130 C: ?

WILLIAMSON ROAD LIBRARY

3837 Williamson Road, Roanoke, VA 24012

CONSTRUCTION DOCUMENTS

REVISIONS:

ELECTRICAL SITE PLAN

PROJ. NO.:156003 DRAWN BY:ROS
04.13.16

COMMONWEALTH OF VIRGINIA
RANDALL O. SPENCER
Lic. No. 29321
04/13/2016
PROFESSIONAL ENGINEER

E6.01

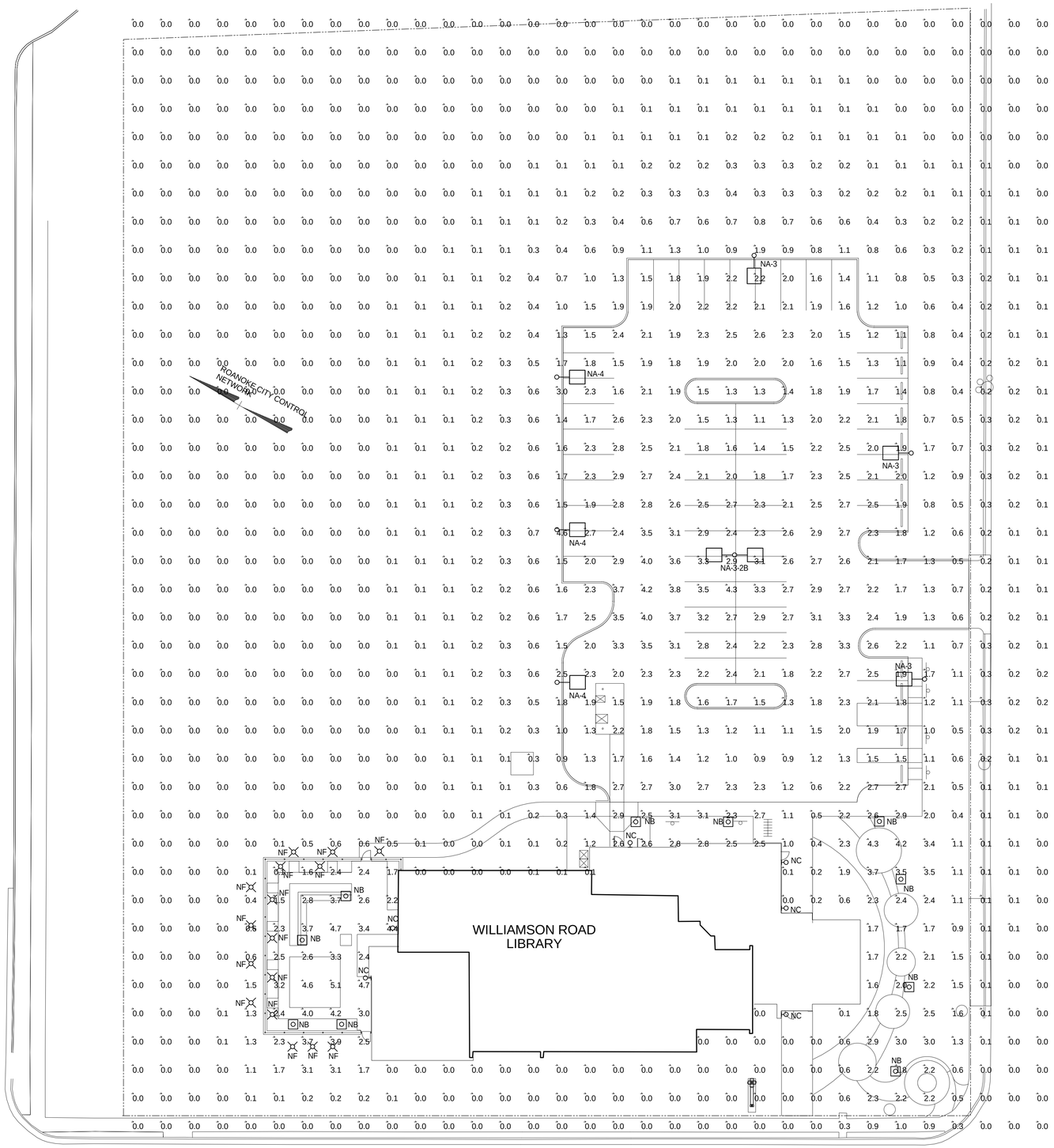

SITE PLAN PHOTOMETRICS

SCALE: 1" = 20'

ENTEROS DESIGN

314 EXCHANGE ALLEY
PETERSBURG, VA 23804

804.861.1200 P
804.861.1253 F

All ideas, designs, arrangements and plans indicated or represented by this drawing are property of ENTEROS DESIGN, PC; created, evolved and developed for the sole use of this project. These ideas, design arrangements and/or plans shall not be used by or disclosed to any person, firm or corporation for any purpose without written permission from ENTEROS DESIGN, PC. Written dimensions on these drawings shall have precedence over scaled dimensions. Contractors shall verify and be responsible for all dimensions and conditions on the job. The Architect must be notified of any variations from the dimensions and conditions shown on these drawings.
c 2016 ENTEROS DESIGN, PC

ASCENT ENGINEERING GROUP

4932 FRONTAGE ROAD NW
ROANOKE, VIRGINIA 24019
(540) 265-4444

D:ROS 15130 C: ?

WILLIAMSON ROAD LIBRARY

3837 Williamson Road, Roanoke, VA 24012

CONSTRUCTION DOCUMENTS

REVISIONS:

ELECTRICAL STIE PLAN PHOTOMETRICS

PROJ. NO.:156003 DRAWN BY:Author
04.13.16

COMMONWEALTH OF VIRGINIA
RANDALL O. SPENCER
Lic. No. 29321
04/13/2016
PROFESSIONAL ENGINEER

E6.02