ROANOKE

LUCK AVENUE COMPACTOR #5

CITY OF ROANOKE, VIRGINIA

SHEET INDEX	
SHEET #	**SHEET TITLE**
C0-01	COVER SHEET
C2-01	SITE LAYOUT PLAN
C2-02	ENLARGED SITE LAYOUT PLAN
C2-03	ELEVATIONS & SITE DETAILS
C2-04	SITE DETAILS
E-1	ELECTRICAL LEGEND, ABBREVIATIONS, NOTES AND SPECIFICATIONS
E-2	ELECTRICAL PLAN, PANEL SCHEDULE AND POWER RISER DIAGRAM

PROJECT LOCATION MAP

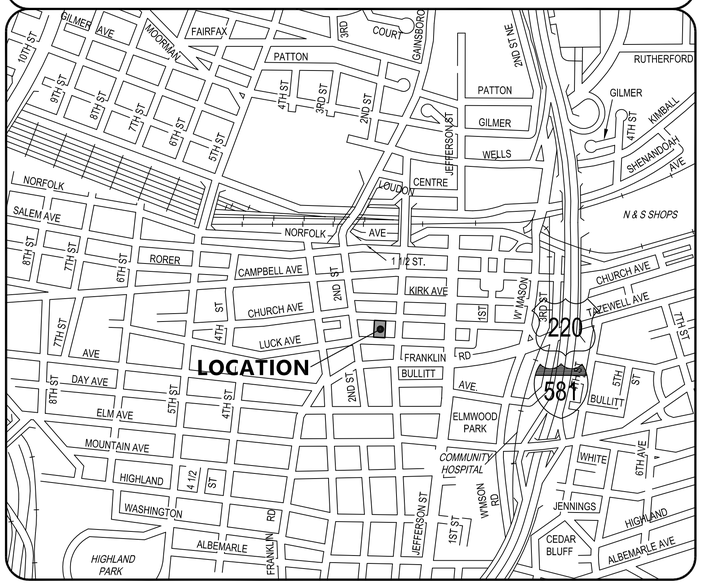

VICINITY MAP

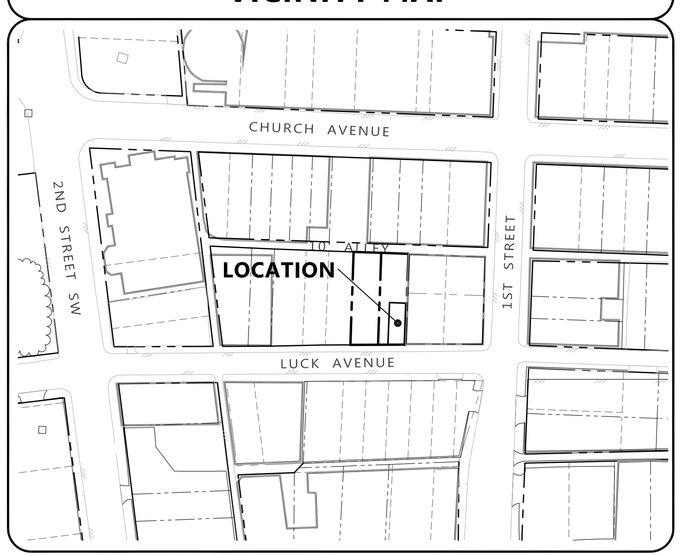

OFFICE OF THE CITY ENGINEER
215 CHURCH AVENUE, SW
ROOM 350
ROANOKE, VIRGINIA 24011-1587
PHONE: (540) 853-2731
FAX: (540) 853-1364
ENGINEER@ROANOKEVA.GOV

PROJECT NAME

LUCK AVENUE
COMPACTOR #5

CITY OF ROANOKE

CITY ENGINEERING PLAN NUMBER: _____

LEGEND

TREE	UNDERGROUND TELEPHONE
GAS LINE	PROPERTY LINE
UNDERGROUND POWER	SANITARY MANHOLE
UNDERGROUND CABLE	UTILITY POLE
WATER LINE	UTILITY POLE
STORM PIPE	GUY WIRE
SANITARY SEWER	FENCE
LEVEL THREE COMM.	EDGE OF PAVEMENT
UNDERGROUND TELEPHONE	EXISTING SURVEY NAIL
NEW CONTOUR LINE	GAS VALVE
CONTOUR LINE	SMALL WATER METER/VALVE
FLOODPLAIN BOUNDARY	WATERLINE MANHOLE
SANITARY MANHOLE	TELEPHONE MANHOLE
STORM MANHOLE	CLEANOUT
ELECTRIC MANHOLE	
FIRE HYDRANT	

ABBREVIATIONS

CL =	CENTERLINE
ELEV =	ELEVATION
EL =	ELEVATION
FG =	FINISHED GRADE
EG =	EXISTING GROUND
RCP =	REINFORCED CONCRETE PIPE
CI =	CAST IRON
CMP =	CORRUGATED METAL PIPE
INV IN =	INVERT IN
INV OUT =	INVERT OUT
FFE =	FINISHED FLOOR ELEVATION
PUE =	PUBLIC UTILITY EASEMENT
CONC =	CONCRETE
MIN =	MINIMUM
CB =	CATCH BASIN
DI =	DROP INLET
DIA =	DIAMETER
ID =	INNER DIAMETER
W/ =	WITH
W/O =	WITHOUT
RR =	RAILROAD
ROW =	RIGHT OF WAY
ø =	DIAMETER
WVWA =	WESTERN VIRGINIA WATER AUTHORITY
VDOT =	VIRGINIA DEPARTMENT OF TRANSPORTATION
DCR =	VIRGINIA DEPARTMENT OF CONSERVATION AND RECREATION
TW =	TOP OF WALL ELEVATION
BW =	BOTTOM OF WALL ELEVATION
HT =	HEIGHT
RD =	ROOF DRAIN
TK =	THICK
L =	LENGTH
NO. =	NUMBER
R =	RADIUS
AC. =	ACRE(S)
SF =	SQUARE FOOT (FEET)
PERF =	PERFORATED
HORIZ =	HORIZONTAL
VERT =	VERTICAL
MDD =	MAXIMUM DRY DENSITY
SWM =	STORM WATER MANAGEMENT
OAE =	OR APPROVED EQUAL
NIC =	NOT IN CONTRACT
H.E.S. =	HIGH EARLY STRENGTH
PVC =	POLYVINYL CHLORIDE
HDPE =	HIGH DENSITY POLYETHYLENE
BLDG =	BUILDING
CRNR =	CORNER
PROP =	PROPOSED
CO =	CLEANOUT
SCO =	STORM CLEANOUT
SSCO =	SANITARY SEWER CLEANOUT
WSE =	WATER SURFACE ELEVATION
HP =	HIGH POINT
TYP =	TYPICAL
MH =	MANHOLE
SD =	STORM DRAIN
MAX =	MAXIMUM
EXST =	EXISTING
EXIST =	EXISTING
PVMT =	PAVEMENT
LF =	LINEAR FEET
APPROX =	APPROXIMATELY
SDMH =	STORM DRAIN MANHOLE
SSMH =	SANITARY SEWER MANHOLE
LW =	LIMIT OF WORK
MECH =	MECHANICAL
N =	NORTHING
E =	EASTING
TOC =	TOP OF CURB ELEVATION
BOC =	BOTTOM OF CURB ELEVATION
FH =	FIRE HYDRANT
PSI =	POUNDS PER SQUARE INCH
PSF =	POUNDS PER SQUARE FOOT
GPM =	GALLONS PER MINUTE
FT =	FOOT, FEET
IN =	INCH, INCHES
OC =	ON CENTER
SAN =	SANITARY SEWER
N =	NORTHING
E =	EASTING
WWF =	WELDED WIRE FABRIC
RHS =	RAINWATER HARVESTING SYSTEM
EXP JT =	EXPANSION JOINT
CC JT =	CRACK CONTROL JOINT
CONN =	CONNECTION
ENT =	ENTRANCE
KSI =	KIPS PER SQUARE INCH
REQD =	REQUIRED

APPROVED FOR CONSTRUCTION

ROANOKE CITY ENGINEER	DATE
DIRECTOR OF PUBLIC WORKS	DATE
ASSISTANT CITY MANAGER – OPERATIONS	DATE

SHEET NUMBER: 1 OF 7

GAY AND NEEL, INC.
ENGINEERING ◆ LANDSCAPE ARCHITECTURE ◆ SURVEYING
1260 Radford Street
Christiansburg, Virginia 24073
Phone: (540) 381-6011
Fax: (540) 381-2773
Email: info@gayandneel.com
Web: www.gayandneel.com

The drawing, design, and digital files relating to this project are the property of Gay and Neel, Inc. The reproduction, copying, or other use of this drawing without GNI's written consent is prohibited.

LUCK AVENUE COMPACTOR #5
CITY OF ROANOKE, VIRGINIA

COMMONWEALTH OF VIRGINIA
JOHN T. NEEL
Lic. No. 035780
03/30/2016
PROFESSIONAL ENGINEER

REVISIONS		
NO.	COMMENTS	DATE

PROJECT TEAM	
PIC	JOHN T. NEEL, PE
PM	MATTHEW P. TOMLINSON, PE
DESIGN	MBL

ISSUE DATE: 03/30/2016

GNI JOB NO.: 2642.0

SHEET TITLE: COVER SHEET

SHEET NUMBER: C0-01

X:\Drawings\2642\ENGINEERING\Design\Plans\Sheets\2642_Sht_C0_Cover.dwg
C0-01 COVER SHEET, 03/30/2016 3:13:52 PM, Mlester, Bluebeam PDF, 1:1

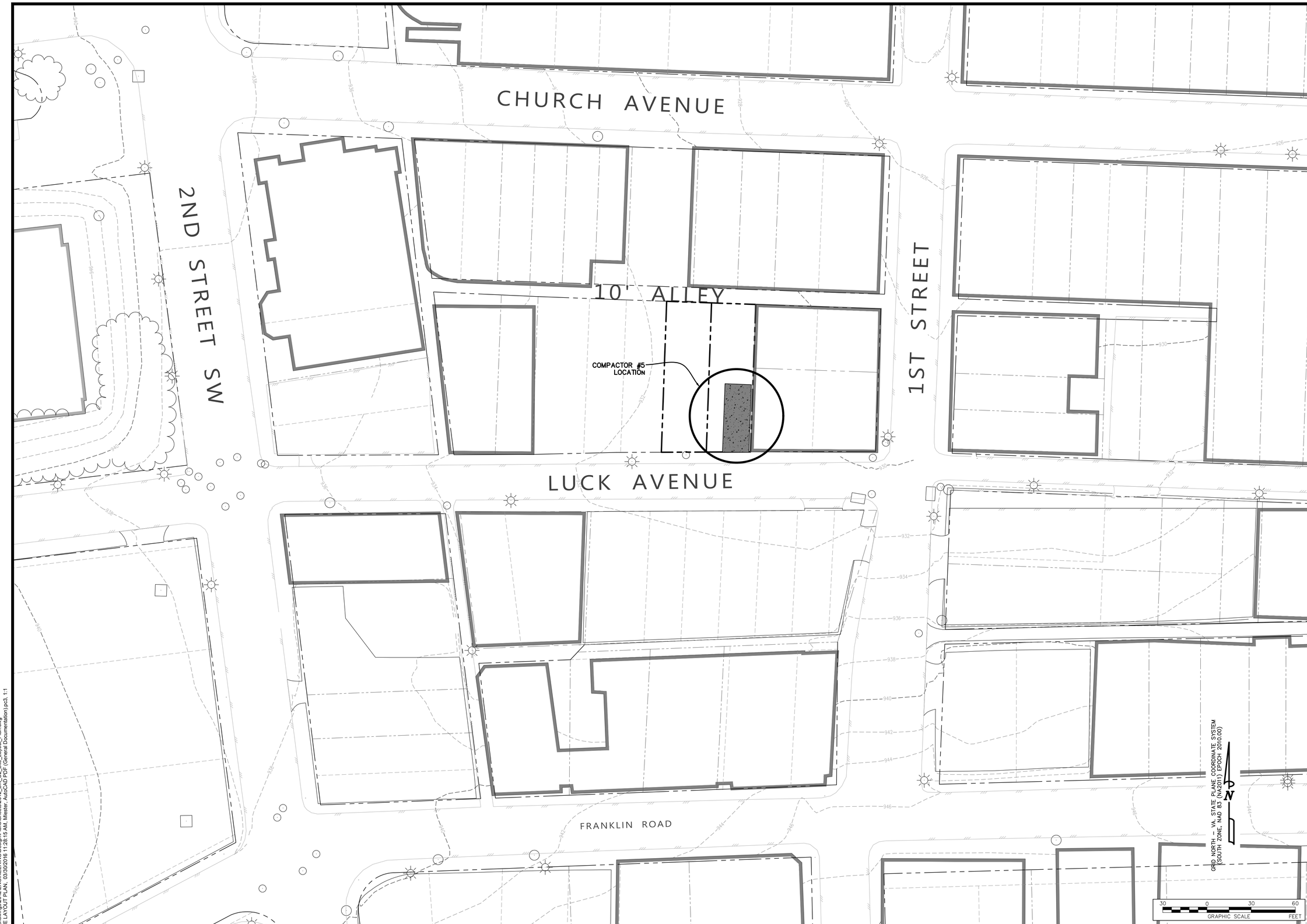

GAY AND NEEL, INC.
ENGINEERING ◆ LANDSCAPE ARCHITECTURE ◆ SURVEYING
1260 Radford Street
Christiansburg, Virginia 24073
Phone: (540) 381-6011
Fax: (540) 381-2773
Email: info@gayandneel.com
Web: www.gayandneel.com

The drawing, design, and digital files relating to this project are the property of Gay and Neel, Inc. The reproduction, copying, or other use of this drawing without GNI's written consent is prohibited.

LUCK AVENUE COMPACTOR #5

CITY OF ROANOKE, VIRGINIA

COMMONWEALTH OF VIRGINIA
JOHN T. NEEL
Lic. No. 035780
03/30/2016
PROFESSIONAL ENGINEER

REVISIONS

NO.	COMMENTS	DATE

PROJECT TEAM

PIC	JOHN T. NEEL, PE
PM	MATTHEW P. TOMLINSON, PE
DESIGN	MBL

ISSUE DATE

03/30/2016

GNI JOB NO.

2642.0

SHEET TITLE

SITE LAYOUT PLAN

SHEET NUMBER

C2-01

X:\Drawings\2642\ENGINEERING\Design\Plans\Sheets\2642_Sht_C2_Site Layout_Plan.dwg
SITE LAYOUT PLAN, 03/30/2016 11:28:15 AM, Mleister, AutoCAD PDF (General Documentation).pc3, 1:1

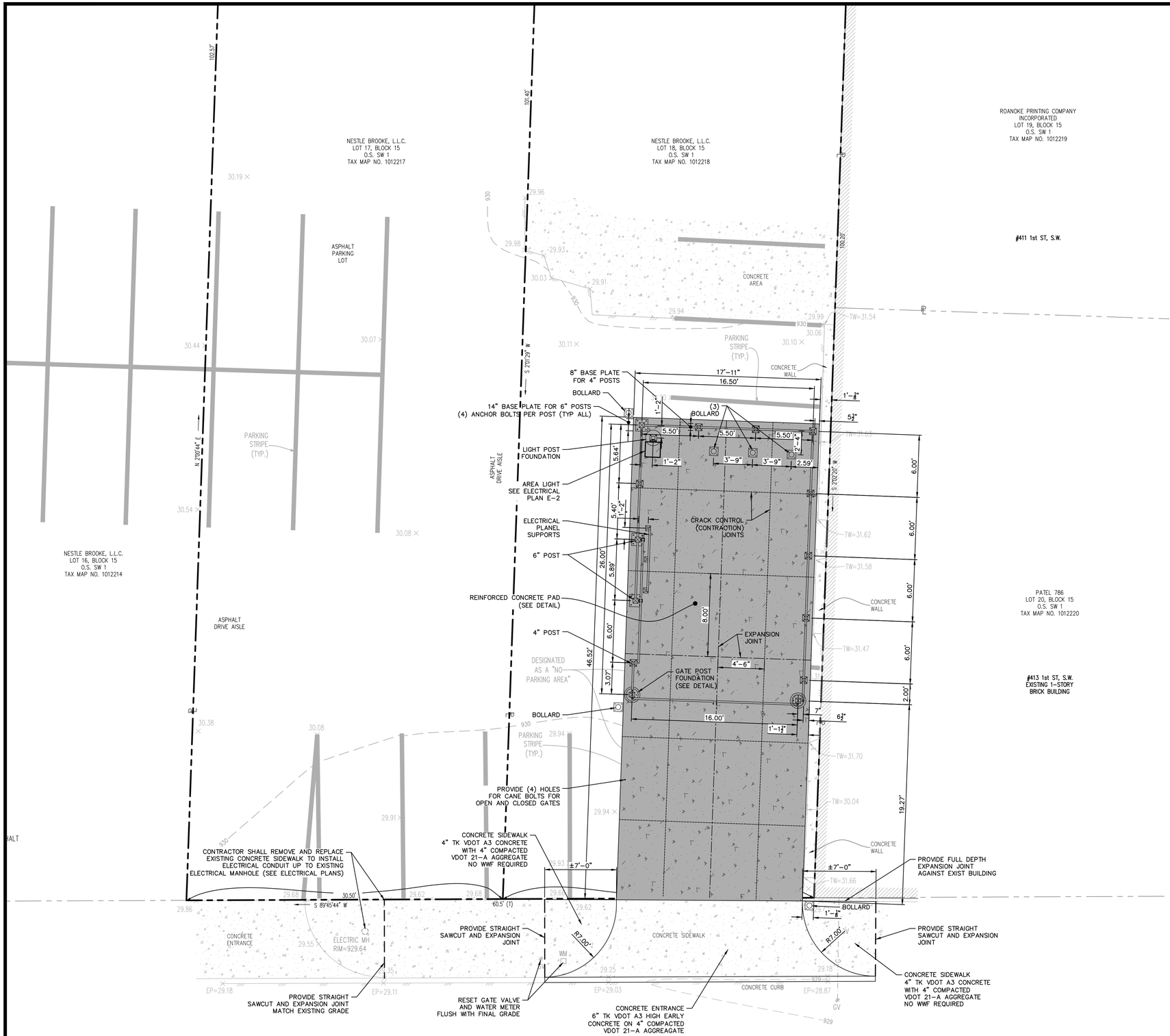

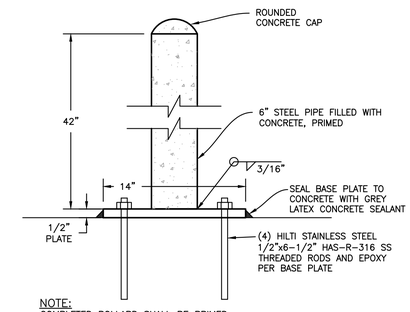

NOTE:
COMPLETED BOLLARD SHALL BE PRIMED AND FINISH PAINTED SAFETY YELLOW.

BOLLARD DETAIL

NTS

NOTES:

1. PROVIDE POLISHED FINISH ON REINFORCED CONCRETE SLAB, FINE BROOM FINISH ON SIDEWALK AND ENTRANCE.
2. PROVIDE SEALED EXPANSION JOINTS AND CONTRACTION JOINTS AS SHOWN ON PLAN. PROVIDE SEALED EXPANSION JOINTS AROUND TWO NEW FOUNDATIONS, ALONG PERIMETER OF NEW SLAB ADJACENT TO OTHER CONCRETE ITEMS, AND EXISTING BUILDING WALL.
3. ASPHALT SHALL NOT BE USED AS A FORM. USE METAL FORM IN GOOD CONDITION ONLY. SEE ASPHALT RESTORATION DETAIL.

GRID NORTH – VA. STATE PLANE COORDINATE SYSTEM (SOUTH ZONE, NAD 83 (NA2011) EPOCH 2010.00)

GRAPHIC SCALE 5 0 5 10 FEET

GAY AND NEEL, INC.
ENGINEERING ◆ LANDSCAPE ARCHITECTURE ◆ SURVEYING
1260 Radford Street
Christiansburg, Virginia 24073
Phone: (540) 381-6011
Fax: (540) 381-2773
Email: info@gayandneel.com
Web: www.gayandneel.com

The drawing, design, and digital files relating to this project are the property of Gay and Neel, Inc. The reproduction, copying, or other use of this drawing without GNI's written consent is prohibited.

LUCK AVENUE COMPACTOR #5

CITY OF ROANOKE, VIRGINIA

COMMONWEALTH OF VIRGINIA
JOHN T. NEEL
Lic. No. 035780
03/30/2016
PROFESSIONAL ENGINEER

REVISIONS		
NO.	COMMENTS	DATE

PROJECT TEAM	
PIC	JOHN T. NEEL, PE
PM	MATTHEW P. TOMLINSON, PE
DESIGN	MBL

ISSUE DATE: 03/30/2016

GNI JOB NO.: 2642.0

SHEET TITLE: ENLARGED SITE LAYOUT PLAN

SHEET NUMBER: C2-02

X:\Projects\2642\ENGINEERING\Design\Plans\Sheets\2642_Sht_C2_Site_Layout_Plan.dwg
ENLARGED SITE LAYOUT PLAN, 03/30/2016 11:28:22 AM, Mtesler, AutoCAD PDF (General Documentation).pc3, 1:1

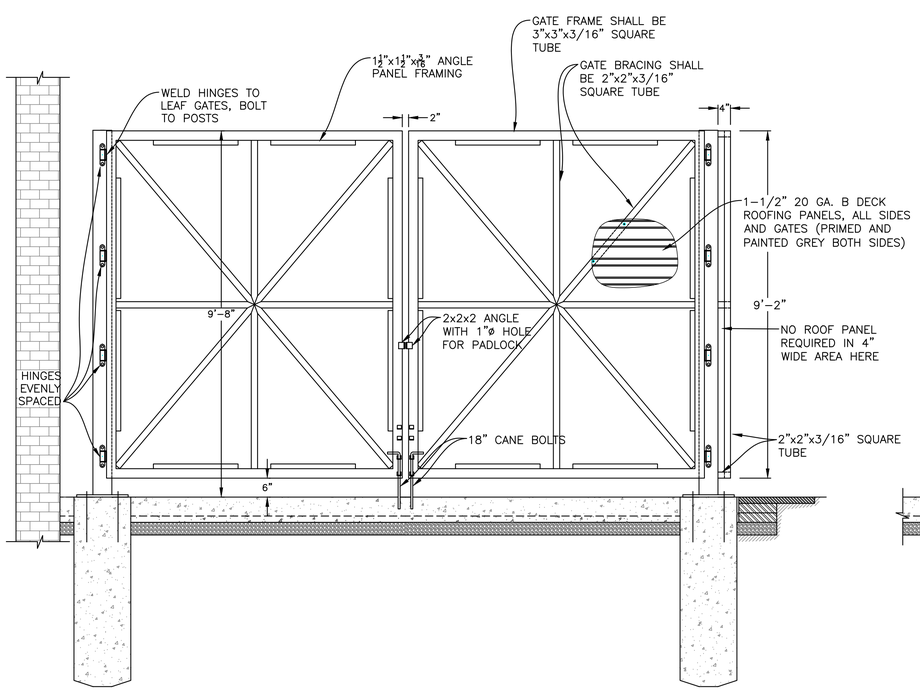

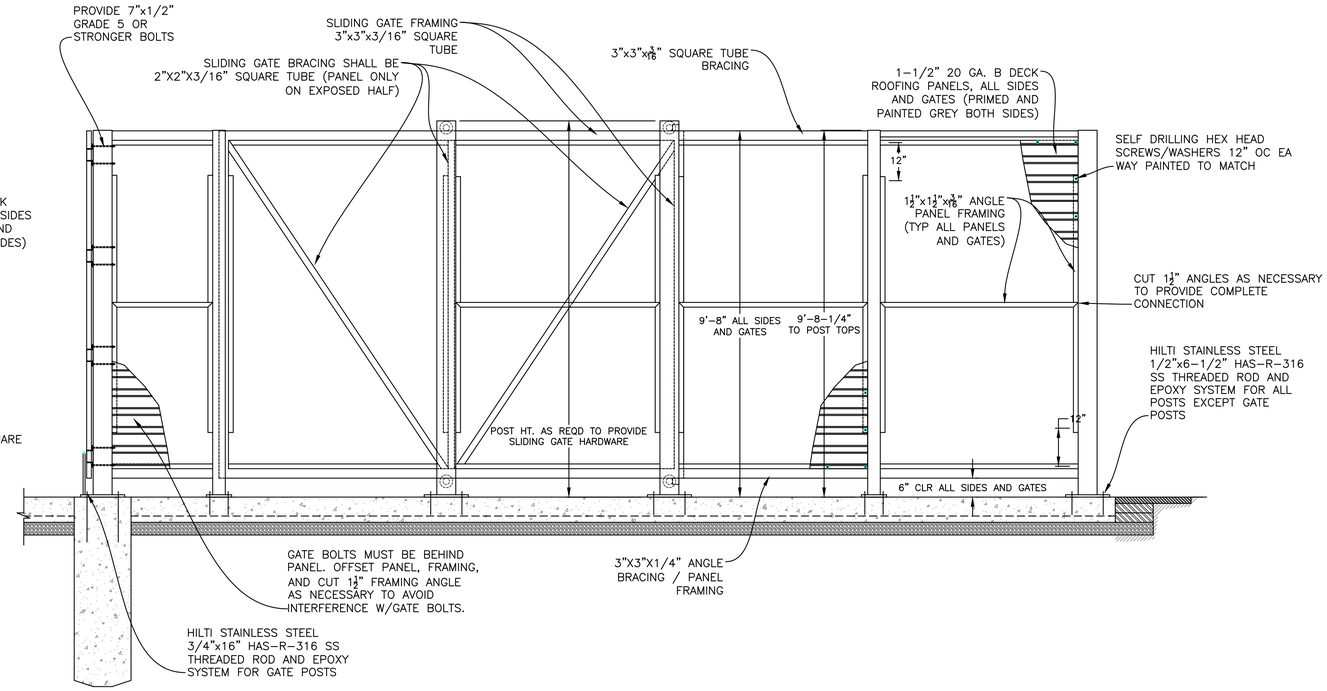

NOTES:

1. THERE SHALL BE NO EXPOSED EDGES OF B DECK ROOFING PANELS UPON COMPLETION.
2. GRIND ALL SHARP EDGES AND CORNERS SMOOTH.
3. PAINT SPECIFICATION:
   SHERWIN WILLIAMS INDUSTRIAL/HIGH PERFORMANCE EPOXY/URETHANE COATING SYSTEM
   PRIMER: MACROPOXY 646 EPOXY
   INTERMEDIATE (FIRST COAT): HI-SOLIDS POLYURETHANE
   TOPCOAT (SECOND COAT) : HI-SOLIDS POLYURETHANE
   FRAME COLOR: BLACK
   PANEL COLOR: MATCH ADJACENT BUILDING FRONT FACADE
   SURFACE PREPARATION:
   ALL WELDS SHALL BE CLEANED, ALL SHARP EDGES GROUND DOWN, AND ALL SURFACES SHALL BE CLEANED OF RUST, MILL SCALE, DIRT, DUST, GREASE, AND ALL OTHER VISIBLE CONTAMINANTS. ALL SURFACES SHALL BE WIPED DOWN WITH CLEAN SOLVENT-SOAKED RAGS JUST PRIOR TO APPLICATION OF PAINT.
4. ALL TUBE AND ANGLE SHALL BE A36 (MIN. 36 KSI YIELD) MILD STEEL.
5. ALL PROVISIONS OF THE AMERICAN WELDING SOCIETY STRUCTURAL WELDING CODE - STEEL, AWS D1.1, SHALL APPLY TO THIS PROJECT. ALL ELECTRODES SHALL BE A MIN. E70XX.
6. ALL CORNER POSTS SHALL BE 6x6x5/16" TUBE; ALL OTHER POSTS SHALL BE 4x4x1/4" TUBE, UNLESS NOTED OTHERWISE.
7. ALL POSTS SHALL BE SET PLUMB. ALL PANELS AND HORIZONTAL FRAMING SHALL BE SET LEVEL. THE SITE IS NOT LEVEL, SO THE PANELS MAY BE STAGGERED.

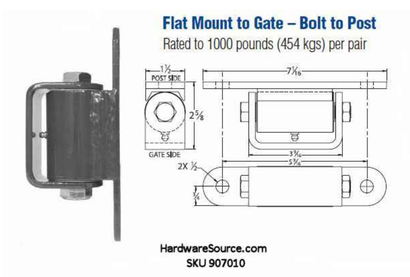

LEAF GATE HINGE DETAIL
NTS

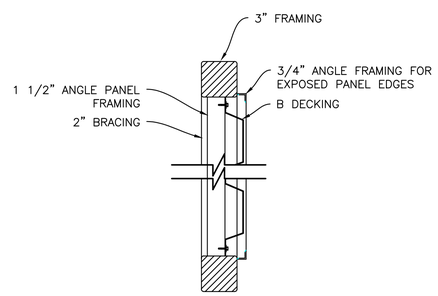

TYPICAL GATE SECTION
NTS

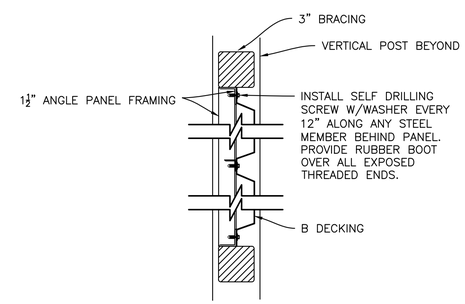

DECKING ATTACHMENT SECTION
NTS

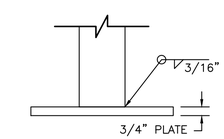

ANCHOR PLATE DETAIL
NTS

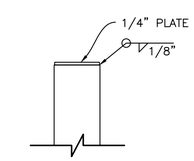

TUBE CAP DETAIL
NTS

GAY AND NEEL, INC.
ENGINEERING ◆ LANDSCAPE ARCHITECTURE ◆ SURVEYING
1260 Radford Street
Christiansburg, Virginia 24073
Phone: (540) 381-6011
Fax: (540) 381-2773
Email: info@gayandneel.com
Web: www.gayandneel.com

The drawing, design, and digital files relating to this project are the property of Gay and Neel, Inc. The reproduction, copying, or other use of this drawing without GNI's written consent is prohibited.

LUCK AVENUE COMPACTOR #5

CITY OF ROANOKE, VIRGINIA

COMMONWEALTH OF VIRGINIA
JOHN T. NEEL
Lic. No. 035780
03/30/2016
PROFESSIONAL ENGINEER

REVISIONS		
NO.	COMMENTS	DATE

PROJECT TEAM	
PIC	JOHN T. NEEL, PE
PM	MATTHEW P. TOMLINSON, PE
DESIGN	MBL

ISSUE DATE: 03/30/2016

GNI JOB NO.: 2642.0

SHEET TITLE: ELEVATIONS & SITE DETAILS

SHEET NUMBER: C2-03

X:\Drawings\2642\ENGINEERING\Design\Plans\Sheets\2642_SH_C2_Site_Details.dwg
C2-03 ELEVATIONS & SITE DETAILS, 03/30/2016 11:28:33 AM, Mbeier, AutoCAD PDF (General Documentation).pc3, 1:1

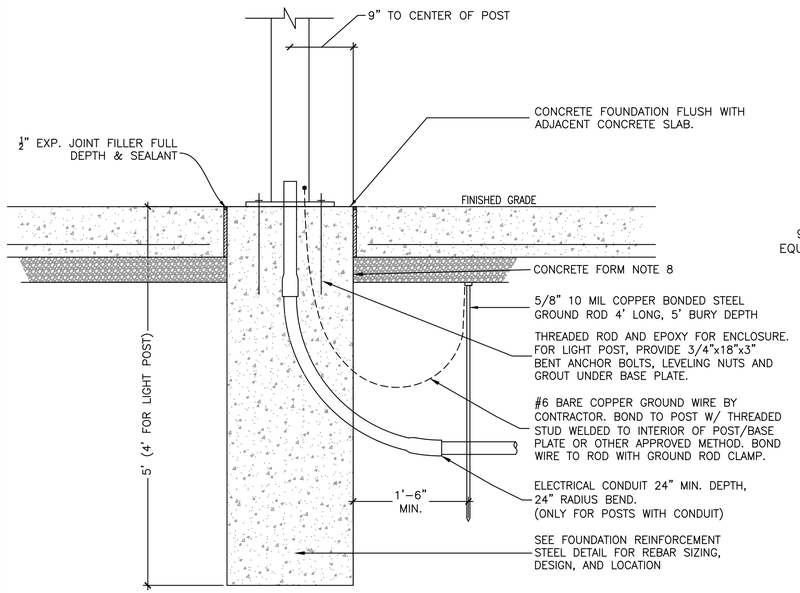

GATE/LIGHT POST DETAIL

NTS

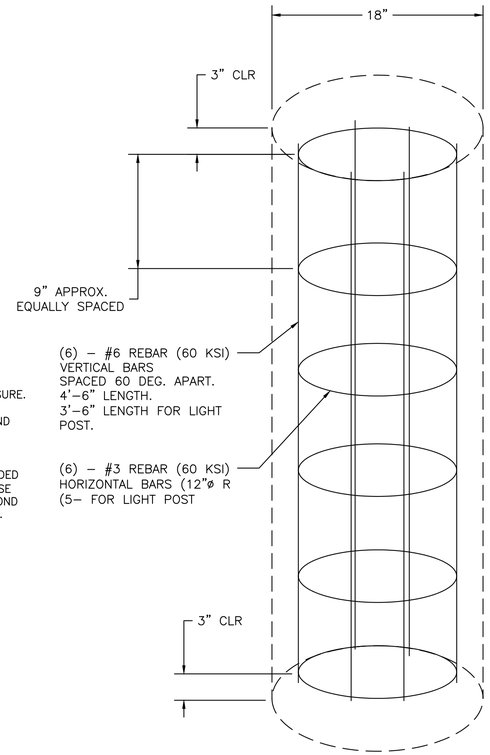

FOUNDATION REINFORCEMENT STEEL DETAIL

NTS

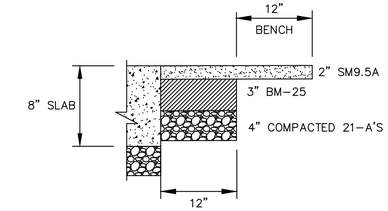

PARKING LOT ASPHALT RESTORATION DETAIL

NTS

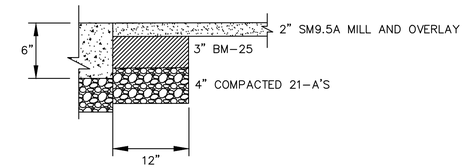

NOTE: THIS DETAIL APPLIES TO RESTORATION ALONG KIRK AVENUE

ENTRANCE ASPHALT RESTORATION DETAIL

NTS

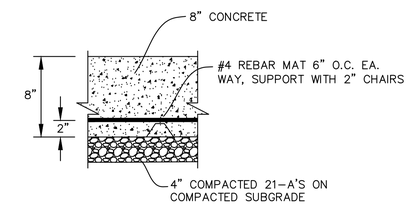

REINFORCED CONCRETE SECTION

NTS

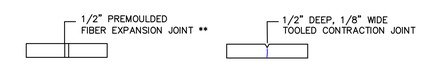

JOINT DETAILS

NTS

** FIBERBOARD SHALL BE TRIMMED TO ALLOW FOR SEALANT. SEE PROJECT MANUAL SPECIFICATIONS FOR THE REQUIRED USE OF SEALANT.

NOTES:

1. GATE POST SHALL NOT BE INSTALLED UNTIL CONCRETE HAS CURED A MINIMUM OF THREE DAYS.
2. ALL WORK TO BE IN ACCORDANCE WITH THE LATEST REVISION OF ACI 318, BUILDING CODE REQUIREMENTS FOR REINFORCED CONCRETE AS WELL AS ANY OTHER APPROPRIATE CODES OR REGULATIONS. CONCRETE FOUNDATION 3500 PSI MINIMUM AT 28 DAYS
3. EACH FOUNDATION SHALL BE POURED IN A SINGLE CONTINUOUS POUR.
4. ALL LOOSE MATERIAL SHALL BE REMOVED FROM THE HOLE PRIOR TO CONCRETE PLACEMENT. THE SIDES OF THE EXCAVATION SHALL BE ROUGH AND FREE OF LOOSE MATERIAL.
5. CONCRETE SHALL BE PLACED IN A MANNER THAT PREVENTS SEGREGATION OF THE CONCRETE AND/OR INFILTRATION OF WATER OR SOIL. FREE FALL CONCRETE IS ALLOWED PROVIDED THE CONCRETE DOES NOT HIT THE SIDES OF THE EXCAVATION OR THE REBAR. UNDER NO CIRCUMSTANCE SHALL CONCRETE FALL THROUGH WATER.
6. GROUND RODS ARE TO BE DRIVEN TO THE DEPTH SHOWN UNLESS ROCK OR OTHER OBSTRUCTIONS ARE ENCOUNTERED.
7. FORM FOR CONCRETE FOUNDATION SHALL BE MADE FROM SONOTUBE OR SIMILAR MATERIAL. FORM SHALL EXTEND MINIMUM OF 12" BELOW GRADE.
8. REFER TO ANCHOR BOLT MANUFACTURER'S INSTRUCTIONS FOR PLACEMENT OF THREADED ROD / EPOXY ANCHOR BOLTS.
9. THE CONTRACTOR SHALL INSTALL AND LEAVE NYLON PULL ROPES IN ALL CONDUITS / POSTS.
10. FORM HORIZONTAL REBAR IN RING OF 12" DIAMETER FOR 18" DIAMETER FOUNDATION.
11. HORIZONTAL TIES SHALL BE TIED TO VERTICAL REINFORCEMENT WITH STANDARD REINFORCEMENT TIE WIRE.
12. CONTRACTOR SHALL USE MANUFACTURER (LITHONIA) ANCHOR BOLT TEMPLATE FOR LIGHT POST FOUNDATION.

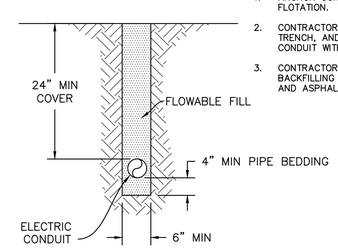

ELECTRICAL TRENCH / SERVICE EXTENSION NOTES:

1. ANCHOR CONDUITS TO PREVENT FLOTATION.
2. CONTRACTOR SHALL EXCAVATE TRENCH, AND INSTALL ELECTRIC CONDUIT WITH NYLON PULL ROPE.
3. CONTRACTOR RESPONSIBLE FOR BACKFILLING WITH FLOWABLE FILL AND ASPHALT RESTORATION.

ELECTRICAL TRENCH

NTS

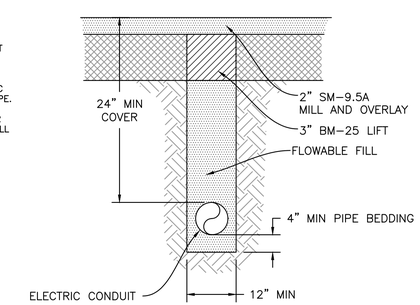

ELECTRICAL SERVICE EXTENSION DUCT

NTS

GAY AND NEEL, INC.
ENGINEERING ◆ LANDSCAPE ARCHITECTURE ◆ SURVEYING
1260 Radford Street
Christiansburg, Virginia 24073
Phone: (540) 381-6011
Fax: (540) 381-2773
Email: info@gayandneel.com
Web: www.gayandneel.com

The drawing, design, and digital files relating to this project are the property of Gay and Neel, Inc. The reproduction, copying, or other use of this drawing without GNI's written consent is prohibited.

LUCK AVENUE COMPACTOR #5

CITY OF ROANOKE, VIRGINIA

COMMONWEALTH OF VIRGINIA
JOHN T. NEEL
Lic. No. 035780
03/30/2016
PROFESSIONAL ENGINEER

REVISIONS		
NO.	COMMENTS	DATE

PROJECT TEAM	
PIC	JOHN T. NEEL, PE
PM	MATTHEW P. TOMLINSON, PE
DESIGN	MBL

ISSUE DATE: 03/30/2016

GNI JOB NO.: 2642.0

SHEET TITLE: SITE DETAILS

SHEET NUMBER: C2-04

X:\Drawings\2642\ENGINEERING\Design\PlanSheets\2642_SH_C2_Site_Details.dwg
C2-04 SITE DETAILS, 03/30/2016 11:28:35 AM, Mlester, AutoCAD PDF (General Documentation).pc3, 1:1

ELECTRICAL SPECIFICATIONS:

1. SCOPE OF WORK: PROVIDE SUPERVISION, LABOR, MATERIAL, EQUIPMENT, MACHINERY, PLANT AND OTHER ITEMS NECESSARY FOR A COMPLETE AND OPERABLE ELECTRICAL SYSTEM.

2. STANDARDS AND CODES: THE MATERIALS AND EQUIPMENT SHALL BE NEW AND LISTED BY UNDERWRITERS LABORATORIES, INC. THE INSTALLATION SHALL BE IN ACCORDANCE WITH THE 2012 VIRGINIA UNIFORM STATEWIDE BUILDING CODE (USBC); THE 2012 INTERNATIONAL BUILDING CODE (IBC) AS ADOPTED AND MODIFIED BY THE 2012 USBC; THE 2011 NFPA-70 (NATIONAL ELECTRICAL CODE, OR NEC); AND OTHER RELATED CODES AND STANDARDS. WORKMANSHIP SHALL MEET THE "STANDARDS OF INSTALLATION" AS PUBLISHED BY THE NATIONAL ELECTRICAL CONTRACTORS ASSOCIATION (NECA).

3. PERMITS AND FEES: OBTAIN PERMITS, BONDS, LICENSES AND INSPECTION CERTIFICATES. PAY INSPECTION FEES AND TAXES. FILE PLANS AND PREPARE DOCUMENTS REQUIRED TO OBTAIN APPROVALS OF GOVERNMENTAL DEPARTMENTS HAVING JURISDICTION. UTILITY CONNECTION CHARGES WILL BE PAID BY THE OWNER.

4. CONDUIT: PROVIDE RIGID STEEL CONDUIT (RGS), INTERMEDIATE METALLIC CONDUIT (IMC) OR SCHEDULE 40 PVC CONDUIT UNDERGROUND. PROVIDE RIGID STEEL CONDUIT (RGS) OR INTERMEDIATE METAL CONDUIT (IMC) OR SCHEDULE 40 PVC CONDUIT WHERE EXTERIOR ABOVE-GRADE. THE ENTIRE INSTALLATION FOR THIS PROJECT IS SUBJECT TO THE WEATHER AND SHALL BE CONSIDERED WET LOCATION. USE PVC JACKETED FLEXIBLE LIQUID-TIGHT CONDUIT TYPE UA FOR CONNECTIONS IN WET LOCATIONS. CONDUIT SHALL BE MINIMUM 3/4". SUPPORT CONDUIT AS REQUIRED BY THE NEC. FITTINGS SHALL NOT BE CAST POT METAL. ALL CIRCUITS SHALL BE CONDUIT AND WIRE.

5. JUNCTION, OUTLET AND PULL BOXES: PROVIDE JUNCTION, OUTLET AND PULL BOXES FOR WIRING DEVICES, FIXTURES, CONNECTIONS TO EQUIPMENT AND AS REQUIRED BY THE NEC. ALL BOXES SHALL BE CORROSION-RESISTANT CAST METAL RAINTIGHT TYPE OF TYPES, SHAPES AND SIZES SUITABLE FOR INSTALLATION AT RESPECTIVE LOCATIONS, WITH THREADED CONDUIT HOLES FOR FASTENING ELECTRICAL CONDUIT, COMPLETE WITH NEMA 3R COVERS.

6. HANGERS AND SUPPORTS: PROVIDE ALL HANGERS, SUPPORTS, ANCHORS, SLEEVES AND SEALS AS REQUIRED BY THE NEC.

7. WIRING: PROVIDE COPPER CONDUCTORS, THHN OR THWN, 600 VOLT. WIRING THROUGHOUT THE PROJECT SHALL BE COLOR-CODED TO IDENTIFY PHASES, NEUTRAL AND GROUND. NUMBER 12 AWG SHALL BE THE SMALLEST SIZE WIRE USED FOR LIGHTING AND POWER. CONDUCTORS 8 AWG AND LARGER SHALL BE STRANDED; CONDUCTORS 10 AWG AND SMALLER SHALL BE SOLID. WIRING IN CONDUIT SHALL BE RUN CONCEALED UNDER SLAB OR BE RUN EXPOSED AND SHALL NEATLY ALIGN WITH ENCLOSURE ELEMENTS. DO NOT INSTALL A SHARED NEUTRAL ON ANY CIRCUIT. PROVIDE PVC JACKETED MC CABLE WHERE SPECIFICALLY CALLED FOR ON THE DRAWINGS. PVC JACKETED MC CABLE SHALL BE RATED FOR CONCEALED AND WET LOCATIONS (SHOP DRAWING REQUIRED).

8. GROUNDING: PROVIDE AN EQUIPMENT GROUNDING SYSTEM INSTALLED TO METALLIC STRUCTURES, ENCLOSURES, RACEWAYS, JUNCTION BOXES, OUTLET BOXES, PULL BOXES, CABINETS, MACHINE FRAMES, PORTABLE EQUIPMENT AND OTHER CONDUCTIVE ITEMS IN CLOSE PROXIMITY TO ELECTRICAL CIRCUITS. ALL BRANCH AND FEEDER CIRCUITS SHALL INCLUDE A GREEN GROUNDING CONDUCTOR. PROVIDE GROUND BUS IN ALL PANELBOARDS. PROVIDE SYSTEM GROUND IN ACCORDANCE WITH NEC ARTICLE 250. GROUND RODS SHALL BE STEEL WITH COPPER WELDED EXTERIOR, 3/4 INCH DIAMETER AND 10 FEET LENGTH.

9. IDENTIFICATION: WHEREVER REASONABLY REQUIRED FOR SAFETY, MAINTENANCE AND/OR OPERATIONAL PURPOSES, PROVIDE SELF-ADHESIVE PLASTIC SIGNS FOR IDENTIFICATION, INSTRUCTION OR WARNING ON SWITCHES AND OUTLETS, AS WELL AS OTHER CONTROLS, DEVICES AND ENCLOSURE COVERS. PROVIDE A DANGER SIGN WHEREVER IT IS POSSIBLE FOR PERSONS TO COME INTO CONTACT WITH A VOLTAGE HIGHER THAN 120 VOLTS. PROVIDE AN ENGRAVED PLASTIC-LAMINATE LABEL ON EACH MAJOR UNIT OF ELECTRICAL EQUIPMENT, INCLUDING BUT NOT LIMITED TO: PANELBOARDS AND DISCONNECT SWITCHES.

10. CONNECTIONS TO EQUIPMENT: MAKE FINAL ELECTRICAL POWER CONNECTIONS TO EQUIPMENT UNLESS NOTED OTHERWISE. PROVIDE CONDUITS, OUTLET BOXES AND POWER WIRING FROM THE POWER SOURCE TO THE MOTOR OR EQUIPMENT JUNCTION BOX IN ACCORDANCE WITH THE MANUFACTURER'S INSTALLATION INSTRUCTIONS.

11. WIRING DEVICES (SHOP DRAWINGS REQUIRED): WIRING DEVICES SHALL BE WHITE AND SHALL BE INDUSTRIAL SPECIFICATION GRADE. RECEPTACLES SHALL BE NEMA 5-20R, GROUNDED. GFCI TYPE DUPLEX RECEPTACLES SHALL BE RATED 5 MILLIAMPS. DEVICE PLATES SHALL BE HIGH IMPACT NYLON COLOR TO MATCH DEVICE COLOR. WEATHERPROOF COVERS SHALL HINGE FROM TOP AND SHALL BE WEATHERPROOF WHILE-IN-USE, AND RECEPTACLES IN THESE COVERS SHALL BE LISTED AS WEATHER-RESISTANT TYPE.

12. SAFETY SWITCHES (SHOP DRAWINGS REQUIRED): PROVIDE GENERAL DUTY SAFETY SWITCHES FOR EQUIPMENT SHOWN ON THE DRAWINGS. PROVIDE EQUIPMENT GROUNDING KIT FOR ALL SAFETY SWITCHES. PROVIDE NEMA-3R ENCLOSURE.

13. PANELBOARDS (SHOP DRAWINGS REQUIRED): PANELBOARD SHALL BE DEAD-FRONT, COPPER BUSES (TO INCLUDE PHASE, NEUTRAL AND GROUND BUSSES) WITH THERMAL MAGNETIC MOLDED CASE CIRCUIT BREAKERS IN ACCORDANCE WITH SCHEDULE SHOWN ON THE DRAWINGS. BREAKERS SHALL BE BOLT-ON. PANELBOARD SHALL HAVE TYPED, FRAMED CIRCUIT DIRECTORY. DOORS SHALL HAVE LOCKS. PROVIDE SERVICE ENTRANCE RATING AS INDICATED.

14. SURGE PROTECTIVE DEVICES (SPD) (SHOP DRAWINGS REQUIRED):

    A. SPD EQUIPMENT SHALL BE LISTED AND LABELED PER ANSI/U.L. 1449 3RD EDITION, AND SHALL BE TESTED AND DEMONSTRATE SUITABILITY FOR APPLICATION WITHIN ANSI/IEEE C62.41 CATEGORY C, B AND A ENVIRONMENTS.
    B. SPD SHALL BE MANUFACTURED BY THE SAME MANUFACTURER AS THE PANELBOARD.
    C. THE SPD MANUFACTURER SHALL PROVIDE UNLIMITED FREE REPLACEMENT OF THE ENTIRE SPD FOR ALL INOPERABLE SPD UNITS DURING THE WARRANTY PERIOD.
    D. SPD SHALL BE GUARANTEED BY THE INSTALLING CONTRACTOR AND SURGE SUPPRESSION MANUFACTURER TO BE FREE OF DEFECTS IN MATERIALS AND WORKMANSHIP FOR A PERIOD OF NOT LESS THAN 5 YEARS FROM THE DATE OF SUBSTANTIAL COMPLETION OF THE SYSTEM FOR WHICH THE SUPPRESSOR IS INSTALLED. THE WARRANTY SHALL PROVIDE FOR A COMPLETE REPLACEMENT OF SPD IN ORDER TO EXPEDITE SERVICE.
    E. SPD UNIT SHALL INCORPORATE THERMALLY PROTECTED METAL-OXIDE VARISTORS (MOVs) AS THE CORE SURGE SUPPRESSION COMPONENT FOR THE SERVICE ENTRANCE. THE SYSTEM SHALL NOT UTILIZE SILICON AVALANCHE DIODES, SELENIUM CELLS, AIR GAPS, OR OTHER COMPONENTS THAT MAY CROWBAR THE SYSTEM VOLTAGE LEADING TO SYSTEM UPSET OR CREATE ANY ENVIRONMENTAL HAZARDS.
    F. SPD UNIT MUST PROTECT ALL MODES (L-N, L-G, L-L, N-G) OF THE ELECTRICAL SYSTEM BEING UTILIZED.
    G. SPD UNIT SHALL HAVE 20KA NOMINAL DISCHARGE CURRENT.
    H. SPD UNIT SHALL BE INSTALLED INTEGRALLY IN THE PANELBOARD. SPD UNIT SHALL BE DIRECTLY CONNECTED TO THE BUS AND SHALL HAVE AN INTEGRAL DISCONNECT SWITCH. THE COMPLETE PANELBOARD, INCLUDING THE SPD, SHALL BE UL67 LISTED.
    I. SPD UNIT SHALL MEET ANSI/U.L. VOLTAGE PROTECTION RATING (VPR) OF (MAXIMUM): 700V (L-N, L-G, N-G) AND 1200V (L-L) FOR 120/208V. MAXIMUM SURGE CURRENT RATINGS SHALL BE 250KA PER PHASE / 125KA PER MODE. MAXIMUM CONTINUOUS OPERATING VOLTAGE (MCOV) SHALL BE 125% MINIMUM OF NOMINAL VOLTAGE.
    J. SPD UNIT SHALL HAVE POSITIVE STATUS MONITORS FOR EACH PHASE.

15. LIGHTING (SHOP DRAWINGS REQUIRED): PROVIDE FIXTURES AS INDICATED ON DRAWINGS. MANUFACTURER SHALL BE AS INDICATED ON THE DRAWINGS OR EQUAL. FIXTURES SHALL BE COMPLETE WITH REQUIRED SOCKETS, WIRING, POLES, REFLECTORS, FITTINGS AND BRACKETS. PROVIDE PROPER FRAMES, MOUNTING DEVICES, CONFIGURATION AND ACCESSORIES REQUIRED TO PROPERLY INSTALL FIXTURES AS INDICATED. INSTALL POLE AND FIXTURE PER MANUFACTURER'S INSTRUCTIONS.

GENERAL NOTES:

1. WHERE MULTIPLE CIRCUITS ARE COMBINED IN A SINGLE CONDUIT, DERATE CONDUCTORS PER THE NEC.

2. IT SHALL BE THE CONTRACTOR'S RESPONSIBILITY TO DETERMINE ALL PANELBOARD FEEDER ENTRANCE LOCATIONS (TOP, BOTTOM, SIDE).

3. FOR ALL EXTERIOR UNDERGROUND CONDUIT AND WIRING, CAREFULLY COORDINATE ALL WORK WITH EXISTING SOIL CONDITIONS AND WITH EXISTING UTILITIES IN ORDER TO AVOID CONFLICTS. NOTIFY ENGINEER IF ROUTING MUST BE DIFFERENT FROM WHAT IS SHOWN ON THE DRAWINGS. CUT EXISTING CONCRETE AS REQUIRED FOR ROUTING UNDERGROUND CONDUIT AND CIRCUITS. PATCH AND REPAIR CONCRETE PER ROANOKE CITY REQUIREMENTS.

4. THE CONTRACTOR SHALL VISIT THE SITE PRIOR TO SUBMITTING BID IN ORDER TO VERIFY ALL EXISTING CONDITIONS, TO DETERMINE THE FULL EXTENT OF DEMOLITION WORK REQUIRED, AND TO DETERMINE THE FULL EXTENT OF RELOCATION AND MODIFICATION WORK REQUIRED FOR ELECTRICAL WORK (DUE TO OTHER DISCIPLINES INTERFERING OR ANY OTHER REASON). EXISTING SPACE IS TIGHT IN MANY AREAS (PARTICULARLY ABOVE CEILINGS), AND THE CONTRACTOR SHALL BE FULLY RESPONSIBLE TO COORDINATE ALL ELECTRICAL WORK WITH BOTH NEW AND EXISTING PIPING, DUCTWORK, ETC. NO CHANGE ORDERS WILL BE APPROVED FOR ADDITIONAL WORK DUE TO THE CONTRACTOR NEGLECTING TO VISIT THE SITE AND GATHER ALL NECESSARY INFORMATION.

ELECTRICAL ABBREVIATIONS

A OR AMP	AMPERE	INC	INCANDESCENT
ABD	ABANDONED	INIT	INITIAL
ABV	ABOVE	JB	JUNCTION BOX
AC	ALTERNATING CURRENT	KCMIL	THOUSAND CIRCULAR MILS
ACB	ABOVE COUNTER BACKSPLASH	KO	KNOCKOUT
AF OR AFI	ARC FAULT INTERRUPTER	KV	KILOVOLT
AFD	ADJUSTABLE FREQUENCY DRIVE	KVA	KILOVOLT-AMPERE
AFF	ABOVE FINISHED FLOOR	KVAR	KILOVOLT-AMPERE REACTIVE
AIC	AMPERES INTERRUPTING CAPACITY	KW	KILOWATT
AIP	ABANDONED IN PLACE	KWH	KILOWATT-HOUR
AL	ALUMINUM	LA	LIGHTNING ARRESTER
AM	AMMETER	LED	LIGHT EMITTING DIODE
AMPL	AMPLIFIER	LPS	LOW PRESSURE SODIUM
ASYM	ASYMMETRICAL	LRP	LIGHTING RELAY PANEL
ATS	AUTOMATIC TRANSFER SWITCH	LTG	LIGHTING
AWG	AMERICAN WIRE GAGE	LUM	LUMENS OR LUMINAIRE
BAS	BUILDING AUTOMATION SYSTEM	MAG	MAGNETIC
BEL	BELOW	MAN	MANUAL
BD	BUS DUCT	MATV	MASTER ANTENNA TELEVISION
BOT	BOTTOM	MCA	MINIMUM CIRCUIT AMPACITY
BRKR	BREAKER	MCB	MAIN CIRCUIT BREAKER
C	COUNTERTOP	MCC	MOTOR CONTROL CENTER
CA	CABLE	MCM	THOUSAND CIRCULAR MILS
CAB	CABINET	MDF	MAIN DISTRIBUTION FRAME
CATV	CABLE TV	M/G	MOTOR/GENERATOR
CB	CIRCUIT BREAKER	MH	METAL HALIDE OR MOUNTING HEIGHT
CCTV	CLOSED CIRCUIT TELEVISION	MIN	MINIMUM
CF	COMPACT FLUORESCENT	MLO	MAIN LUGS ONLY
CKT	CIRCUIT	MMS	MANUAL MOTOR STARTER
CLG	CEILING	MNS	MASS NOTIFICATION SYSTEM
CND	CONDUIT	MOCP	MAXIMUM OVER CURRENT PROTECTION
CNTR	CENTER	MOD	MOTOR OPERATED DAMPER
COMB	COMBINATION	MOT	MOTOR
COND	CONDUCTOR	MS	MAGNETIC STARTER
CONN	CONNECTION	MTG	MOUNTED OR MOUNTING
CONT	CONTACTOR	MTR	METER
CR	CORROSION RESISTANT	MV	MERCURY VAPOR
CT	CURRENT TRANSFORMER	N OR NORM	NORMAL
CTRL	CONTROL	NEC	NATIONAL ELECTRICAL CODE
CU	COPPER	NEUT	NEUTRAL
CW	COLD WATER	NFSS	NON-FUSIBLE SAFETY SWITCH
DB	DOOR BELL	NL	NIGHT LIGHT
DC	DIRECT CURRENT	NO	NUMBER
DIM	DIMENSION	OH	OVERHEAD
DISC	DISCONNECT	P	POLE
DR	DOOR RELEASE SERVICE	PB	PULL BOX OR PUSHBUTTON
DS	DOOR SWITCH	PBS	PUSHBUTTON STATION
DWG	DRAWING	PH	PHASE
E OR EMER	EMERGENCY	PNL	PANEL OR PANELBOARD
EC	EMPTY CONDUIT	PNLBRD	PANELBOARD
ECNC	EXIST CND AND NEW CONDS	PRI	PRIMARY
EGC	EQUIPMENT GROUNDING CONDUCTOR	PT	POTENTIAL TRANSFORMER
EL	EXIST RELOCATED TO THIS LOCATION	PVC	POLYVINYL CHLORIDE
ELEC	ELECTRIC OR ELECTRICAL	PWR	POWER
ELEV	ELEVATOR	QTY	QUANTITY
EM	EXIST REMOVED	RB	RELAY BASE
EML	EXIST REMOVED AND RELOCATED	REC	RECEPTACLE
EMN	EXIST REMOVED AND NEW INSTALLED	REFRIG	REFRIGERATOR
EMT	ELECTRICAL METALLIC TUBING	RGS	RIGID GALVANIZED STEEL CONDUIT
ENCL	ENCLOSURE	S/O	SPACE ONLY
ENG	ENGINE	SB	SOUNDER BASE
EP	EXPLOSIONPROOF	SCCR	SHORT CIRCUIT CURRENT RATING
EQUIP	EQUIPMENT	SEC	SECONDARY
ER	EXIST TO REMAIN	SL	SINGLE STATION
ERC	ELEVATOR RECALL	SMD	MOTOR OPERATED SMOKE DAMPER
EWC	ELECTRIC WATER COOLER	SMR	SURFACE METAL RACEWAY
EXIST	EXISTING	SN	SOLID NEUTRAL
EXT	EXTERIOR	SP	SPECIAL PURPOSE
FA	FIRE ALARM	SPD	SURGE PROTECTIVE DEVICE
FACP	FIRE ALARM CONTROL PANEL	SPKR	SPEAKER
FACU	FIRE ALARM CONTROL UNIT	SR	SURFACE RACEWAY
FDR	FEEDER	SS	SURGE SUPPRESSOR
FC	FOOTCANDLE	STR	STARTER
FLUOR	FLUORESCENT	SW	SWITCH
FSD	FIRE/SMOKE DAMPER	SWBD	SWITCHBOARD
FSS	FUSIBLE SAFETY SWITCH	SWGR	SWITCHGEAR
FXTR	FIXTURE	SYM	SYMMETRICAL
GD	GARAGE DOOR	TC	TIME CLOCK
GEC	GROUNDING ELECTRODE CONDUCTOR	TEL	TELEPHONE
GEN	GENERATOR	TR	TAMPER RESISTANT
GF OR GFI	GROUND FAULT INTERRUPTER	TV	TELEVISION
GFP	GROUND FAULT PROTECTION/PROTECTED	TYP	TYPICAL
GND	GROUND	UC	UNDERCOUNTER
GTD	GENERATOR TRANSFER DEVICE	UF	UNDERFLOOR
H OR HOR	HORIZONTAL	UG	UNDERGROUND
HG	HOSPITAL GRADE	UL	UNDERWRITERS' LABORATORIES
HGT	HEIGHT	UNO	UNLESS NOTED OTHERWISE
HID	HIGH INTENSITY DISCHARGE	V	VOLT
HOA	HAND-OFF-AUTOMATIC	VA	VOLT-AMPERE
HP	HORSEPOWER OR HEAT PUMP	VAR	VOLT-AMPERE REACTIVE
HPF	HIGH POWER FACTOR	VERT	VERTICAL
HPS	HIGH PRESSURE SODIUM	VFD	VARIABLE FREQUENCY DRIVE
HTR	HEATER	VM	VOLTMETER
HW	HOT WATER	W	WATT OR WIRE
HZ	HERTZ	WG	WIRE GUARD
IC	INTERCOM OR INTERRUPTING CAPACITY	WP	WEATHERPROOF
IDF	INTERMEDIATE DISTRIBUTION FRAME	XFER	TRANSFER
IG	ISOLATED GROUND	XFMR	TRANSFORMER
IMC	INTERMEDIATE METAL CONDUIT		

NOTE (ELECTRICAL ABBREVIATIONS):

1. ALL ABBREVIATIONS LISTED MAY NOT APPLY TO THIS PROJECT. REFER TO OTHER ABBREVIATION LISTS ELSEWHERE IN THESE DOCUMENTS FOR ABBREVIATIONS NOT LISTED HERE.

ELECTRICAL LEGEND

MTG. HGT.	SYMBOL	DESCRIPTION
	1	PLAN NOTE DESIGNATION.
		RECEPTACLE, DUPLEX GFCI, WALL.
	J	JUNCTION BOX, WALL.
6'-0"		208/120 VOLT PANELBOARD.
	A-3	CIRCUIT DESIGNATION. DESIGNATION SHOWN INDICATES PANEL A AND CIRCUIT NUMBER 3.
		SITE LIGHTING FIXTURE, POST DOUBLE ARM MOUNTED.
5'-0"	N/3/60	NON-FUSIBLE SAFETY SWITCH, WALL OR EQUIPMENT MOUNTED. NUMBER INDICATES SAFETY SWITCH 3-POLE/60 AMP RATING.
	M	ELECTRIC MOTOR CONNECTION.
		CONDUIT TURNED UP.
		CONDUIT CONCEALED IN OR BELOW FLOOR SLAB OR BELOW GRADE.

NOTES (ELECTRICAL LEGEND):

1. THESE ARE STANDARD ELECTRICAL SYMBOLS AND MAY NOT ALL APPEAR ON THE PROJECT DRAWINGS. HOWEVER, WHEREVER AN ELECTRICAL SYMBOL APPEARS ON THE PROJECT DRAWINGS, THE ITEM SHALL BE FURNISHED AND INSTALLED.
2. MOUNTING HEIGHTS ARE FROM GRADE TO TOP OF OUTLET OR EQUIPMENT, UNO. WHERE THE MOUNTING HEIGHT INDICATED ON THE DRAWINGS IS DIFFERENT FROM THE LEGEND, THE DRAWING TAKES PRECEDENT. SEE DRAWINGS FOR MOUNTING HEIGHTS NOT INDICATED IN THE LEGEND.
3. SEE ELECTRICAL ABBREVIATIONS FOR ALPHABETIC SUBSCRIPT WITH SYMBOL, UNO.

LPA
LAWRENCE PERRY & ASSOCIATES
Consulting Engineers
15 E Salem Avenue SE, Suite 101 Ph: (540) 342-1816
Roanoke, Virginia 24011 Fax: (540) 344-3410
Comm. No.: 16101.11

©Lawrence Perry and Associates, Inc.

GAY AND NEEL, INC.
ENGINEERING ❖ LANDSCAPE ARCHITECTURE ❖ SURVEYING
1260 Radford Street
Christiansburg, Virginia 24073
Phone: (540) 381-6011
Fax: (540) 381-2773
Email: info@gayandneel.com
Web: www.gayandneel.com

The drawing, design, and digital files relating to this project are the property of Gay and Neel, Inc. The reproduction, copying, or other use of this drawing without GNI's written consent is prohibited.

LUCK AVENUE
COMPACTOR #5

CITY OF ROANOKE, VIRGINIA

COMMONWEALTH OF VIRGINIA
03/30/16
BEAU MONTGOMERY
Lic. No. 049584
PROFESSIONAL ENGINEER

REVISIONS

NO.	COMMENTS	DATE

PROJECT TEAM

PIC	JOHN T. NEEL, PE
PM	MATTHEW P. TOMLINSON, PE
DESIGN	BSM

ISSUE DATE: 03/30/2016

GNI JOB NO.: 2642.0

SHEET TITLE: ELECTRICAL LEGEND, ABBREVIATIONS, NOTES AND SPECIFICATIONS

SHEET NUMBER: E-1

PANEL A

VOLTAGE: 208Y/120V
SYSTEM: 3PH, 4W
SOLID NEUTRAL: YES

MAIN: 100A MCB
BUS RATING: 100A
GROUND BUS: YES

INTEGRAL SPD: YES
MOUNTING: SURFACE
INTERRUPT RATING: 65,000 AIC

CKT	LOAD SERVED	BKR	PHASE	NEUT	GND	COND	L1	L2	L3	CKT	LOAD SERVED	BKR	PHASE	NEUT	GND	COND	L1	L2	L3
1	SPARE	20/1	-	-	-	-	-			2	COMPACTOR DISCONNECT	60/3	#6	-	#10	1"	3.7		
3	SPARE	20/1	-	-	-	-		-		4	10HP-3PH-208V	-	#6	-	-	-		3.7	
5	SPARE	20/1	-	-	-	-			-	6	-	-	#6	-	-	-			3.7
7	SERVICE REC	20/1	#12	#12	#12	3/4"	.18			8	REC FOR OZONATOR	20/1	#12	#12	#12	3/4"	.5		
9	COMPACTOR CONTROLS	20/1	#12	#12	#12	3/4"		.2		10	SPARE	20/1	-	-	-	-		-	
11	SPARE	20/1	-	-	-	-			-	12	SPARE	20/1	-	-	-	-			-
13	REC COMM BOX	20/1	#12	#12	#12	3/4"	.18			14	SPD DISC MEANS	60/3	#6	#6	#6	1"	-		
15	MOTORIZED GATE	20/1	#12	#12	#12	3/4"		.65		16	(IF DISC MEANS REQUIRED)	-	#6	-	-	-		-	
17	LTG FIXTURE	20/1	#12	#12	#12	3/4"			.15	18	"	-	#6	-	-	-			-
																PHASE LOAD TOTALS	4.56	4.55	3.85

PROVIDE WITH NEMA 3R ENCLOSURE
SERVICE ENTRANCE RATED AND LABELED

LOADS (KVA)	CONNECTED	DEMAND FACTOR	DEMAND
LIGHTING	.15	1.25	.19
REC TO 10 KVA	.86	1.0	.86
REC REMAINING	0	0.5	0
SPACE HEATING	0	0.0	0
AIR CONDITIONING	0	1.0	0
NON-SEASONAL MOTORS	0	1.0	0
LARGEST MOTOR	11.09	0.25	2.77
WATER HEATING	0	1.0	0

LOADS (KVA)	CONNECTED	DEMAND FACTOR	DEMAND	
KITCHEN EQUIPMENT	0	1.0	0	
CONTINUOUS	0	1.25	0	
NON-CONTINUOUS	11.95	1.0	11.95	
DEMAND	0	1.0	0	
TOTAL CONNECTED LOAD	13	KVA	36	AMPS
MIN. FEEDER / PANEL CAPACITY	15.8	KVA	43.8	AMPS
OVERALL DEMAND FACTOR	1.22			

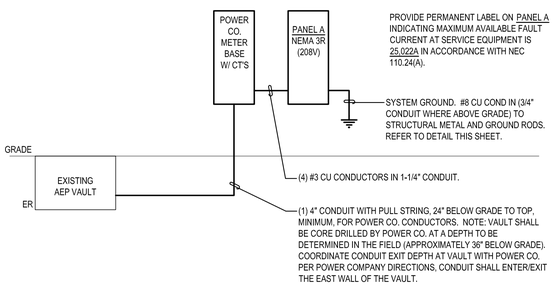

POWER RISER DIAGRAM

NO SCALE

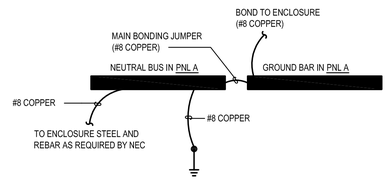

GROUNDING SCHEMATIC

NO SCALE

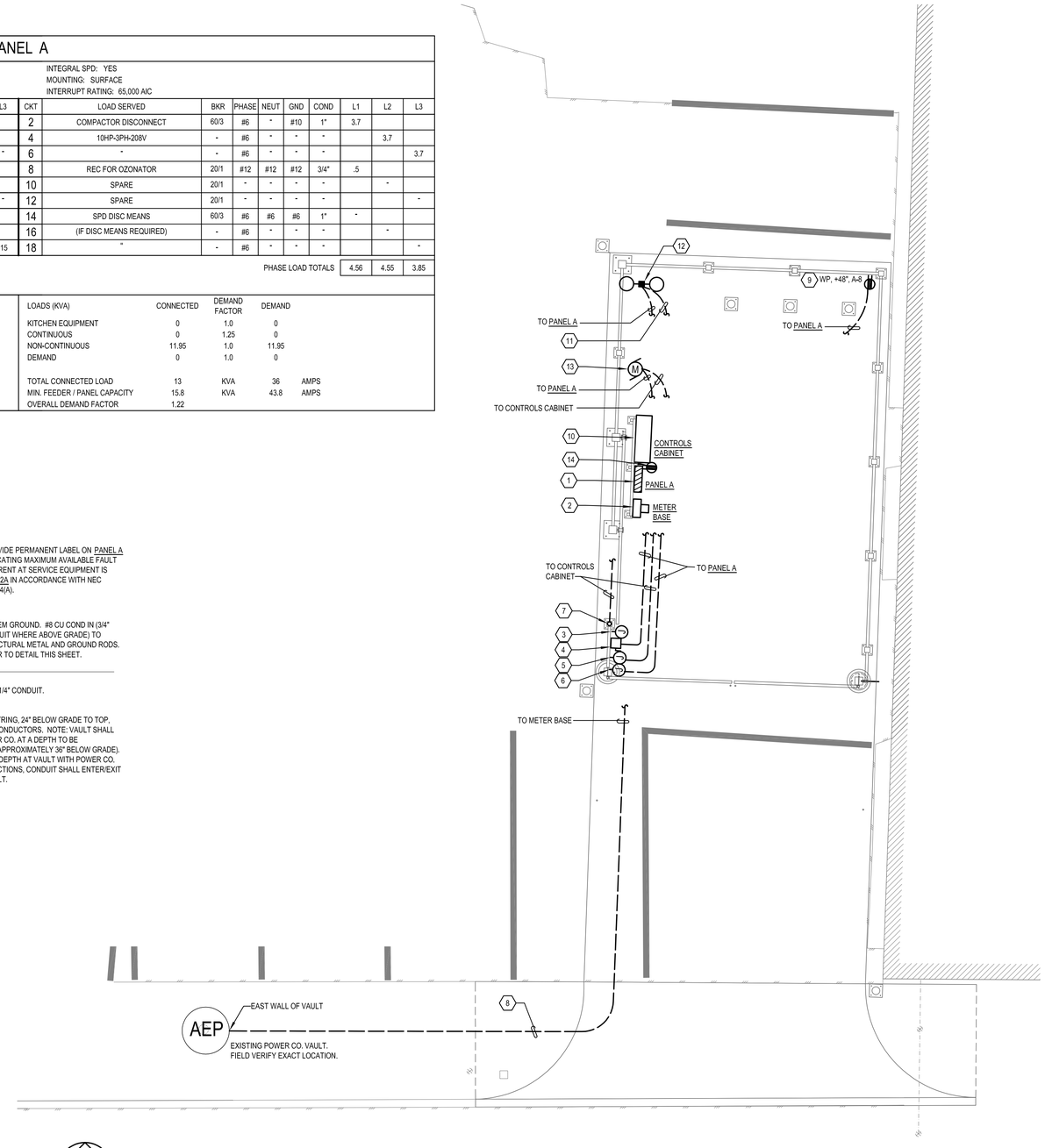

ELECTRICAL PLAN

SCALE: 1/4" = 1'-0"

PLAN NOTES:

1. PANEL A MOUNTED ON UNISTRUT STRUCTURE. REFER TO CIVIL DRAWINGS FOR STRUCTURAL DETAILS.
2. POWER CO. METER BASE WITH SELF-CONTAINED CT'S, MOUNTED ON UNISTRUT STRUCTURE.
3. SINGLE GANG WEATHERPROOF JUNCTION BOX FOR "PUSH TO EXIT" CONTROLS (DEVICE AND WIRING BY VENDOR). MOUNT BOX 48" ABOVE GRADE ATTACHED TO ENCLOSURE. PROVIDE ONE (1) 3/4" FLEXIBLE CONDUIT FROM JUNCTION BOX TO LASER EYE (PROVIDED BY VENDOR, FIELD VERIFY LOCATION).
4. COMPACTOR DISCONNECT SWITCH, N/3/60, NEMA 3R. LINE SIDE CONDUCTORS AND CONDUIT SHALL BE BY CONTRACTOR, LOAD SIDE CONDUCTORS AND CONDUIT BY VENDOR. PROVIDE ONE (1) 1" CONDUIT, 24" BELOW GRADE TO TOP, MINIMUM, FROM PANEL A FOR CONDUCTORS AND CONNECT TO CIRCUIT A-2. MOUNT DISCONNECT ATTACHED TO ENCLOSURE.
5. 2-GANG WEATHERPROOF JUNCTION BOX FOR ACCESS AND COMPACTOR CONTROLS (CONTROLS AND WIRING BY VENDOR). MOUNT BOX 36" ABOVE GRADE ATTACHED TO ENCLOSURE. PROVIDE ONE (1) 1" CONDUIT FROM CONTROLS CABINET TO JUNCTION BOX. CONDUIT SHALL BE 24" BELOW GRADE TO TOP, MINIMUM. EXTEND ONE (1) 3/4" CONDUIT TO "PUSH TO EXIT" JUNCTION BOX AND ONE (1) 3/4" FLEXIBLE CONDUIT TO COMPACTOR CONTROLLER (PROVIDED BY VENDOR, FIELD VERIFY LOCATION).
6. SINGLE GANG WEATHERPROOF JUNCTION BOX FOR COMPACTOR 120V CONTROLS. EXTEND ONE (1) 3/4" CONDUIT, 24" BELOW GRADE TO TOP, MINIMUM, FROM PANEL A, CIRCUIT 9, TO JUNCTION BOX AND ONE (1) 3/4" CONDUIT FROM JUNCTION BOX TO COMPACTOR CONTROLLER (PROVIDED BY VENDOR, FIELD VERIFY LOCATION). WIRING FROM PANEL TO JUNCTION BOX BY CONTRACTOR; WIRING FROM JUNCTION BOX TO COMPACTOR CONTROLLER BY VENDOR.
7. ONE (1) 3/4" CONDUIT FROM CONTROLS CABINET FOR GATE ACCESS CONTROL (DEVICE AND WIRING BY VENDOR). CONDUIT SHALL BE 24" BELOW GRADE TO TOP, MINIMUM, SHALL TURN UP IN HOLLOW COLUMN. REFER TO DETAIL ON CIVIL DRAWINGS FOR TURNING CONDUIT UP IN HOLLOW COLUMN.
8. NEW UNDERGROUND SECONDARY CONDUIT FROM EXISTING VAULT TO NEW METER BASE. COORDINATE EXACT ROUTE IN FIELD WITH EXISTING AND NEW UTILITIES. CONDUIT SHALL BE 24" BELOW GRADE TO TOP, MINIMUM.
9. FOR OZONATOR, VERIFY DEVICE LOCATION WITH VENDOR. CONDUIT FEEDING DEVICE SHALL BE 24" BELOW GRADE TO TOP, MINIMUM.
10. CONTROLS CABINET. PROVIDE 36"X36"X12", NEMA 3R, LOCKABLE CABINET WITH SIDE HINGED COVER ON WALL 72" ABOVE GRADE TO TOP ON UNISTRUT. CABINET SHALL SERVE AS TERMINATION POINT FOR CONDUITS FROM GATE ACCESS AND CAMERAS. PROVIDE 3/4" THICK, FIRE TREATED PLYWOOD BACKBOARD IN CABINET AND PROVIDE DUPLEX RECEPTACLE CONNECTED TO CIRCUIT A-13.
11. ONE (1) 1" CONDUIT, 24" BELOW GRADE TO TOP, MINIMUM, FROM CONTROLS CABINET TO POLE BASE AND TURNED UP INSIDE POLE FOR VENDOR CCTV CAMERAS AND CABLING (VENDOR FURNISHED AND INSTALLED).
12. TWO HEAD, EACH WITH 6602 NOMINAL LUMENS, LED AREA LIGHT ON A SINGLE 15' TALL, 4" SQUARE STEEL POLE. FINISH OF FIXTURE AND POLE SHALL MATCH AND BE SELECTED BY OWNER. FIXTURE SHALL BE LITHONIA #KAD-LED-1-30C530/40K-R4-MVOLT-SPD04-DLL127F1.5JU OR APPROVED EQUAL. PROVIDE EACH FIXTURE WITH TWIST-LOCK PHOTOCELL. POLE SHALL BE LITHONIA #SSS-15-4C-DM28-EHH12B. PROVIDE HANDHOLE AT BASE OF POLE AND ANOTHER HANDHOLE 12' ABOVE GRADE FOR CCTV CAMERAS. PROVIDE 3/4" CONDUIT, 24" BELOW GRADE TO TOP, MINIMUM, FOR CONDUCTORS AND TURN CONDUIT UP INSIDE POLE. UTILIZE PVC JACKETED MC CABLE FOR POWER WIRING WITHIN THE POLE. CONNECT FIXTURE TO CIRCUIT A-17. REFER TO CIVIL DRAWINGS FOR POLE BASE DETAIL.
13. MOTORIZED GATE, CONNECT TO CIRCUIT A-15. PROVIDE A SEPARATE 3/4" CONDUIT FROM GATE MOTOR TO CONTROLS CABINET FOR CONTROLS WIRING (BY VENDOR).
14. DUPLEX RECEPTACLE WITH WEATHERPROOF, WHILE-IN-USE COVER MOUNTED ON UNISTRUT STRUCTURE. CONNECT TO CIRCUIT A-7

LPA
LAWRENCE PERRY & ASSOCIATES
Consulting Engineers
15 E Salem Avenue SE, Suite 101
Roanoke, Virginia 24011
Ph: (540) 342-1816
Fax: (540) 344-3410
Comm. No.: 16101.11

©Lawrence Perry and Associates, Inc.

GAY AND NEEL, INC.
ENGINEERING ❖ LANDSCAPE ARCHITECTURE ❖ SURVEYING
1260 Radford Street
Christiansburg, Virginia 24073
Phone: (540) 381-6011
Fax: (540) 381-2773
Email: info@gayandneel.com
Web: www.gayandneel.com

The drawing, design, and digital files relating to this project are the property of Gay and Neel, Inc. The reproduction, copying, or other use of this drawing without GNI's written consent is prohibited.

LUCK AVENUE
COMPACTOR #5

CITY OF ROANOKE, VIRGINIA

COMMONWEALTH OF VIRGINIA
03/30/16
BEAU MONTGOMERY
Lic. No. 049584
PROFESSIONAL ENGINEER

REVISIONS		
NO.	COMMENTS	DATE

PROJECT TEAM	
PIC	JOHN T. NEEL, PE
PM	MATTHEW P. TOMLINSON, PE
DESIGN	BSM

ISSUE DATE
03/30/2016

GNI JOB NO.
2642.0

SHEET TITLE
ELECTRICAL PLAN, PANEL SCHEDULE AND POWER RISER DIAGRAM

SHEET NUMBER
E-2