PROJECT LOCATION MAP

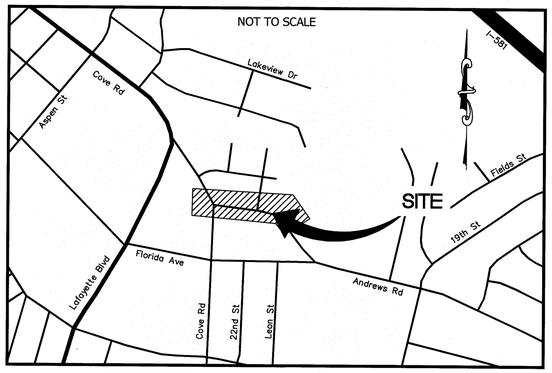

ROANOKE

OFFICE OF THE CITY ENGINEER
215 CHURCH AVENUE, SW
ROOM 350
ROANOKE, VIRGINIA 24011-1587
PHONE: (540) 853-2731
FAX: (540) 853-1364
ENGINEER@ROANOKEVA.GOV

INDEX OF SHEETS

C001 COVER SHEET
C002 GENERAL NOTES AND LEGEND
C101 EXISTING CONDITIONS
C201 EROSION & SEDIMENT CONTROL PLAN
C301 PLAN & PROFILE
C401 EROSION AND SEDIMENT CONTROL DETAILS
C402 STORM STRUCTURE DETAILS
C403 UTILITY & SITE DETAILS

SITE SUMMARY

TAX MAP NUMBER:	#9999998 (RIGHT-OF-WAY),#2350601, #2450207
LOCATION:	ANDREWS/COVE ROADS ROANOKE, VIRIGNIA
PRESENT ZONING:	R-7
PRESENT USE:	RESIDENTIAL/RIGHT-OF-WAY
DISTURBED AREA:	WITHIN PAVED ROADWAY: 0.15 AC OUTSIDE PAVED ROADWAY: 0.04 AC

CONSULTING ENGINEERS

Draper Aden Associates
Engineering • Surveying • Environmental Services

Blacksburg, VA
2206 South Main Street
Blacksburg, VA 24060
540-552-0444 Fax: 540-552-0291
www.daa.com

Richmond, VA
Charlottesville, VA
Hampton Roads, VA
Coats, NC

DAA PROJECT NO: B13179B-01

SUBMITTAL DATE: JANUARY 12, 2015

COMMISSION NUMBER: _____

COMMONWEALTH OF VIRGINIA
MATTHEW BRUCE JAMES
Lic No 0402050828
1/12/2015
PROFESSIONAL ENGINEER

PROJECT NAME

ANDREWS/COVE ROAD STORMWATER DRAINAGE IMPROVEMENTS

CITY ENGINEERING PLAN NUMBER: _____

CITY PLANNING NUMBER: _____

REVISION BY	DESCRIPTION:	DATE

APPROVED FOR CONSTRUCTION

ROANOKE CITY ENGINEER	1.14.2015 DATE
DIRECTOR OF PUBLIC WORKS	01/14/2015 DATE
ASSISTANT CITY MANAGER - OPERATIONS	1/14/15 DATE

ADVERTISED DATE: _____

SET NUMBER: _____

SHEET NUMBER: 1 OF 8

ANDREWS/COVE ROAD STORMWATER DRAINAGE IMPROVEMENTS

STATE MINIMUM STANDARDS FOR EROSION CONTROL

AN EROSION AND SEDIMENT CONTROL PROGRAM ADOPTED BY A DISTRICT OR LOCALITY MUST BE CONSISTENT WITH THE FOLLOWING CRITERIA, TECHNIQUES AND METHODS:

MS-1 PERMANENT OR TEMPORARY SOIL STABILIZATION SHALL BE APPLIED TO DENUDED AREAS WITHIN SEVEN DAYS AFTER FINAL GRADE IS REACHED ON ANY PORTION OF THE SITE. TEMPORARY SOIL STABILIZATION SHALL BE APPLIED WITHIN SEVEN DAYS TO DENUDED AREAS THAT MAY NOT BE AT FINAL GRADE BUT WILL REMAIN DORMANT (UNDISTURBED) FOR LONGER THAN 14 DAYS. PERMANENT STABILIZATION SHALL BE APPLIED TO AREAS THAT ARE TO BE LEFT DORMANT FOR MORE THAN ONE YEAR.
SEEDING IS SHOWN ON THE ESC PLAN.

MS-2 DURING CONSTRUCTION OF THE PROJECT, SOIL STOCKPILES SHALL BE STABILIZED OR PROTECTED WITH SEDIMENT TRAPPING MEASURES. THE CONTRACTOR IS RESPONSIBLE FOR THE TEMPORARY PROTECTION AND PERMANENT STABILIZATION OF ALL SOIL STOCKPILES ON SITE AS WELL AS SOIL INTENTIONALLY TRANSPORTED FROM THE PROJECT SITE.
NO SOIL STOCKPILING IS ANTICIPATED.

MS-3 A PERMANENT VEGETATIVE COVER SHALL BE ESTABLISHED ON DENUDED AREAS NOT OTHERWISE PERMANENTLY STABILIZED. PERMANENT VEGETATION SHALL NOT BE CONSIDERED ESTABLISHED UNTIL A GROUND COVER IS ACHIEVED THAT, IN THE OPINION OF THE DIVISION OF SOIL AND WATER CONSERVATION OF THE DEPARTMENT OF CONSERVATION AND RECREATION, IS UNIFORM, MATURE ENOUGH TO SURVIVE AND WILL INHIBIT EROSION.
PERMANENT VEGETATIVE COVER IS SPECIFIED IN UNPAVED AREAS.

MS-4 SEDIMENT BASINS AND TRAPS, PERIMETER DIKES, SEDIMENT BARRIERS, AND OTHER MEASURES INTENDED TO TRAP SEDIMENT SHALL BE CONSTRUCTED AS A FIRST STEP IN ANY LAND DISTURBING ACTIVITY, AND SHALL BE MADE FUNCTIONAL BEFORE UPSLOPE LAND DISTURBANCE TAKES PLACE.
SILT FENCE IS PROPOSED AS A SEDIMENT BARRIER FOR THIS PROJECT.

MS-5 STABILIZATION MEASURES SHALL BE APPLIED TO EARTHEN STRUCTURES SUCH AS DAMS, DIKES AND DIVERSIONS IMMEDIATELY AFTER INSTALLATION.
N/A

MS-6 SEDIMENT TRAPS AND SEDIMENT BASINS SHALL BE DESIGNED AND CONSTRUCTED BASED UPON THE TOTAL DRAINAGE AREA TO BE SERVED BY THE TRAP OR BASIN.
N/A

A. THE MINIMUM STORAGE CAPACITY OF A SEDIMENT TRAP SHALL BE 134 CUBIC YARDS PER ACRE OF DRAINAGE AREA AND THE TRAP SHALL ONLY CONTROL DRAINAGE AREAS LESS THAT THREE ACRES.

B. THE SURFACE RUNOFF FROM DISTURBED AREAS THAT IS COMPRISED OF FLOW FROM DRAINAGE AREAS GREATER THAN OR EQUAL TO THREE ACRES SHALL BE CONTROLLED BY A SEDIMENT BASIN. THE MINIMUM STORAGE CAPACITY OF A SEDIMENT BASIN SHALL BE 134 CUBIC YARDS PER ACRE OF DRAINAGE AREA. THE OUTFALL SYSTEM SHALL, AT A MINIMUM, MAINTAIN THE STRUCTURAL INTEGRITY OF THE BASIN DURING A TWENTY-FIVE YEAR STORM OF 24-HOUR DURATION. RUNOFF COEFFICIENTS USED IN RUNOFF CALCULATIONS SHALL CORRESPOND TO A BARE EARTH CONDITION OR THOSE CONDITIONS EXPECTED TO EXIST WHILE THE SEDIMENT BASIN IS UTILIZED.

MS-7 CUT AND FILL SLOPES SHALL BE DESIGNED AND CONSTRUCTED IN A MANNER THAT WILL MINIMIZE EROSION. SLOPES THAT ARE FOUND TO BE ERODING EXCESSIVELY WITHIN ONE YEAR OF PERMANENT STABILIZATION SHALL BE PROVIDED WITH ADDITIONAL SLOPE STABILIZING MEASURES UNTIL THE PROBLEM IS CORRECTED.
N/A

MS-8 CONCENTRATED RUNOFF SHALL NOT FLOW DOWN CUT OR FILL SLOPES UNLESS CONTAINED WITHIN AN ADEQUATE TEMPORARY OR PERMANENT CHANNEL, FLUME OR SLOPE DRAIN STRUCTURE.
N/A

MS-9 WHENEVER WATER SEEPS FROM A SLOPE FACE, ADEQUATE DRAINAGE OR OTHER PROTECTION SHALL BE PROVIDED.
N/A

MS-10 ALL STORM SEWER INLETS THAT ARE MADE OPERABLE DURING CONSTRUCTION SHALL BE PROTECTED SO THAT SEDIMENT-LADEN WATER CANNOT ENTER THE CONVEYANCE SYSTEM WITHOUT FIRST BEING FILTERED OR OTHERWISE TREATED TO REMOVE SEDIMENT.
INLET PROTECTION SHOULD BE INSTALLED ON ALL NEW AND EXISTING INLETS.

MS-11 BEFORE NEWLY CONSTRUCTED STORMWATER CONVEYANCE CHANNELS OR PIPES ARE MADE OPERATIONAL, ADEQUATE OUTLET PROTECTION AND ANY REQUIRED TEMPORARY OR PERMANENT CHANNEL LINING SHALL BE INSTALLED IN BOTH THE CONVEYANCE CHANNEL AND RECEIVING CHANNEL.
EXISTING OUTLET PROTECTION IS ADEQUATE.

MS-12 WHEN WORK IN A LIVE WATERCOURSE IS PERFORMED, PRECAUTIONS SHALL BE TAKEN TO MINIMIZE ENCROACHMENT, CONTROL SEDIMENT TRANSPORT AND STABILIZE THE WORK AREA TO THE GREATEST EXTENT POSSIBLE DURING CONSTRUCTION. NONERODIBLE MATERIAL SHALL BE USED FOR THE CONSTRUCTION OF CAUSEWAYS AND COFFERDAMS. EARTHEN FILL MAY BE USED FOR THESE STRUCTURES IF ARMORED BY NONERODIBLE COVER MATERIALS.
N/A

MS-13 WHEN A LIVE WATERCOURSE MUST BE CROSSED BY CONSTRUCTION VEHICLES MORE THAN TWICE IN ANY SIX-MONTH PERIOD, A TEMPORARY VEHICULAR STREAM CROSSING CONSTRUCTED OF NONERODIBLE MATERIAL SHALL BE PROVIDED.
N/A

MS-14 ALL APPLICABLE FEDERAL, STATE AND LOCAL REGULATIONS PERTAINING TO WORKING IN OR CROSSING LIVE WATERCOURSES SHALL BE MET.
N/A

MS-15 THE BED AND BANKS OF A WATERCOURSE SHALL BE STABILIZED INNEDIATELY AFTER WORK IN THE WATERCOURSE IS COMPLETED.
N/A

MS-16 UNDERGROUND UTILITY LINES SHALL BE INSTALLED IN ACCORDANCE WITH THE FOLLOWING STANDARDS IN ADDITION TO OTHER APPLICABLE CRITERIA:
THIS APPLIES TO ALL NEWLY INSTALLED STORM SEWER.

A. NO MORE THAN 500 LINEAR FEET OF TRENCH MAY BE OPENED AT ONE TIME.

B. EXCAVATED MATERIAL SHALL BE PLACED ON THE UPHILL SIDE OF TRENCHES.

C. EFFLUENT FROM DEWATERING OPERATIONS SHALL BE FILTERED OR PASSED THROUGH AN APPROVED SEDIMENT TRAPPING DEVICE, OR BOTH, AND DISCHARGED IN A MANNER THAT DOES NOT ADVERSELY AFFECT FLOWING STREAMS OR OFF-SITE PROPERTY.

D. MATERIAL USED FOR BACKFILLING TRENCHES SHALL BE PROPERLY COMPACTED IN ORDER TO MINIMIZE EROSION AND PROMOTE STABILIZATION.

E. RESTABILIZATION SHALL BE ACCOMPLISHED IN ACCORDANCE WITH THESE REGULATIONS.

F. APPLICABLE SAFETY REGULATIONS SHALL BE COMPLIED WITH.

MS-17 WHERE CONSTRUCTION VEHICLE ACCESS ROUTES INTERSECT PAVED PUBLIC ROADS, PROVISIONS SHALL BE MADE TO MINIMIZE THE TRANSPORT OF SEDIMENT BY VEHICULAR TRACKING ONTO THE PAVED SURFACE. WHERE SEDIMENT IS TRANSPORTED ONTO A PUBLIC ROAD SURFACE, THE ROAD SHALL BE CLEANED THOROUGHLY AT THE END OF EACH DAY. SEDIMENT SHALL BE REMOVED FROM THE ROADS BY SHOVELING OR SWEEPING AND TRANSPORTED TO A SEDIMENT CONTROL DISPOSAL AREA. STREET WASHING SHALL BE ALLOWED ONLY AFTER SEDIMENT IS REMOVED IN THIS MANNER. THIS PROVISION SHALL APPLY TO INDIVIDUAL SUBDIVISION LOTS AS WELL AS TO LARGER LAND-DISTURBING ACTIVITIES.
A CONSTRUCTION ENTRANCE IS PROPOSED.

MS-18 ALL TEMPORARY EROSION CONTROL MEASURES SHALL BE REMOVED WITHIN 30 DAYS AFTER FINAL SITE STABILIZATION, OR AFTER THE TEMPORARY MEASURES ARE NO LONGER NEEDED UNLESS OTHERWISE AUTHORIZED BY THE VESCP ADMINISTRATOR. TRAPPED SEDIMENT AND THE DISTURBED SOIL AREAS RESULTING FROM THE DISPOSITION OF TEMPORARY MEASURES SHALL BE PERMANENTLY STABILIZED TO PREVENT FURTHER EROSION AND SEDIMENTATION.
THIS APPLIES TO ALL SILT FENCE, INLET PROTECTION, AND CONSTRUCTION ENTRANCE.

MS-19 PROPERTIES AND WATERWAYS DOWNSTREAM FROM DEVELOPMENT SITES SHALL BE PROTECTED FROM SEDIMENT DEPOSITION, EROSION AND DAMAGE DUE TO INCREASES IN VOLUME, VELOCITY AND PEAK FLOW RATE OF STORMWATER RUNOFF FOR THE STATED FREQUENCY STORM OF 24-HOUR DURATION IN ACCORDANCE WITH THE FOLLOWING STANDARDS AND CRITERIA. STREAM RESTORATION AND RELOCATION PROJECTS THAT INCORPORATE NATURAL CHANNEL DESIGN CONCEPTS ARE NOT MAN-MADE CHANNELS AND SHALL BE EXEMPT FROM ANY FLOW RATE CAPACITY AND VELOCITY REQUIREMENTS FOR NATURAL OR MAN-MADE CHANNELS:

RUNOFF FROM THE PROPOSED STORM SEWER SYSTEM DISCHARGES INTO A CONCRETE FLUME, WHICH WILL BE REBUILT TO HANDLE POST-DEVELOPMENT 10-YEAR FLOW RATES. THIS FLUME DISCHARGES INTO A NATURAL CHANNEL, WHICH HAS BEEN ANALYZED AND FOUND TO BE ADEQUATE FOR EROSION AND CAPACITY IN A 2-YEAR STORM EVENT.

A. CONCENTRATED STORMWATER RUNOFF LEAVING A DEVELOPMENT SITE SHALL BE DISCHARGED DIRECTLY INTO AN ADEQUATE NATURAL OR MAN-MADE RECEIVING CHANNEL, PIPE OR STORM SEWER SYSTEM. FOR THOSE SITES WHERE RUNOFF IS DISCHARGED INTO A PIPE OR PIPE SYSTEM, DOWNSTREAM STABILITY ANALYSES AT THE OUTFALL OF THE PIPE OR PIPE SYSTEM SHALL BE PERFORMED.

B. ADEQUACY OF ALL CHANNELS AND PIPES SHALL BE VERIFIED IN THE FOLLOWING MANNER:

(1) THE APPLICANT SHALL DEMONSTRATE THAT THE TOTAL DRAINAGE AREA TO THE POINT OF ANALYSIS WITHIN THE CHANNEL IS ONE HUNDRED TIMES GREATER THAN THE CONTRIBUTING DRAINAGE AREA OF THE PROJECT IN QUESTION; OR

(2)(A) NATURAL CHANNELS SHALL BE ANALYZED BY THE USE OF A TWO-YEAR STORM TO VERIFY THAT STORMWATER WILL NOT OVERTOP CHANNEL BANKS NOR CAUSE EROSION OF CHANNEL BED OR BANKS.

(B) ALL PREVIOUSLY CONSTRUCTED MAN-MADE CHANNELS SHALL BE ANALYZED BY THE USE OF A TEN-YEAR STORM TO VERIFY THAT STORMWATER WILL NOT OVERTOP ITS BANKS AND BY THE USE OF A TWO-YEAR STORM TO DEMONSTRATE THAT STORMWATER WILL NOT CAUSE EROSION OF CHANNEL BED OR BANKS; AND

(C) PIPES AND STORM SEWER SYSTEMS SHALL BE ANALYZED BY THE USE OF A TEN-YEAR STORM TO VERIFY THAT STORMWATER WILL BE CONTAINED WITHIN THE PIPE OR SYSTEM.

IF EXISTING NATURAL RECEIVING CHANNELS OR PREVIOUSLY CONSTRUCTED MAN-MADE CHANNELS OR PIPES ARE NOT ADEQUATE, THE APPLICANT SHALL:

(1) IMPROVE THE CHANNELS TO A CONDITION WHERE A TEN-YEAR STORM WILL NOT OVERTOP THE BANKS AND A TWO-YEAR STORM WILL NOT CAUSE EROSION TO CHANNEL THE BED OR BANKS; OR

(2) IMPROVE THE PIPE OR PIPE SYSTEM TO A CONDITION WHERE THE TEN-YEAR STORM IS CONTAINED WITHIN THE APPURTENANCES;

(3) DEVELOP A SITE DESIGN THAT WILL NOT CAUSE THE PRE-DEVELOPMENT PEAK RUNOFF RATE FROM A TWO-YEAR STORM TO INCREASE WHEN RUNOFF OUTFALLS INTO A NATURAL CHANNEL OR WILL NOT CAUSE THE PRE-DEVELOPMENT PEAK RUNOFF RATE FROM A TEN-YEAR STORM TO INCREASE WHEN RUNOFF OUTFALLS INTO A MAN-MADE CHANNEL; OR

(4) PROVIDE A COMBINATION OF CHANNEL IMPROVEMENT, STORMWATER DETENTION OR OTHER MEASURES WHICH IS SATISFACTORY TO THE VESCP AUTHORITY TO PREVENT DOWNSTREAM EROSION.

D. THE APPLICANT SHALL PROVIDE EVIDENCE OF PERMISSION TO MAKE THE IMPROVEMENTS.

E. ALL HYDROLOGIC ANALYSES SHALL BE BASED ON THE EXISTING WATERSHED CHARACTERISTICS AND THE ULTIMATE DEVELOPMENT CONDITION OF THE SUBJECT PROJECT.

F. IF THE APPLICANT CHOOSES AN OPTION THAT INCLUDES STORMWATER DETENTION, HE SHALL OBTAIN APPROVAL FROM THE VESCP OF A PLAN FOR MAINTENANCE OF THE DETENTION FACILITIES. THE PLAN SHALL SET FORTH THE MAINTENANCE REQUIREMENTS OF THE FACILITY AND THE PERSON RESPONSIBLE FOR PERFORMING THE MAINTENANCE.

G. OUTFALL FROM A DETENTION FACILITY SHALL BE DISCHARGED TO A RECEIVING CHANNEL, AND ENERGY DISSIPATORS SHALL BE PLACED AT THE OUTFALL OF ALL DETENTION FACILITIES AS NECESSARY TO PROVIDE A STABILIZED TRANSITION FROM THE FACILITY TO THE RECEIVING CHANNEL.

H. ALL ON-SITE CHANNELS MUST BE VERIFIED TO BE ADEQUATE.

I. INCREASED VOLUMES OF SHEET FLOWS THAT MAY CAUSE EROSION OR SEDIMENTATION ON ADJACENT PROPERTY SHALL BE DIVERTED TO A STABLE OUTLET, ADEQUATE CHANNEL, PIPE OR PIPE SYSTEM, OR TO A DETENTION FACILITY.

J. IN APPLYING THESE STORMWATER MANAGEMENT CRITERIA, INDIVIDUAL LOTS OR PARCELS IN A RESIDENTIAL, COMMERCIAL OR INDUSTRIAL DEVELOPMENT SHALL NOT BE CONSIDERED TO BE SEPARATE DEVELOPMENT PROJECTS. INSTEAD, THE DEVELOPMENT, AS A WHOLE, SHALL BE CONSIDERED TO BE A SINGLE DEVELOPMENT PROJECT. HYDROLOGIC PARAMETERS THAT REFLECT THE ULTIMATE DEVELOPMENT CONDITION SHALL BE USED IN ALL ENGINEERING CALCULATIONS.

K. ALL MEASURES USED TO PROTECT PROPERTIES AND WATERWAYS SHALL BE EMPLOYED IN A MANNER WHICH MINIMIZES IMPACTS ON THE PHYSICAL, CHEMICAL AND BIOLOGICAL INTEGRITY OF RIVERS, STREAMS AND OTHER WATERS OF THE STATE.

L. ANY PLAN APPROVED PRIOR TO JULY 1, 2014, THAT PROVIDES FOR STORMWATER MANAGEMENT THAT ADDRESSES ANY FLOW RATE CAPACITY AND VELOCITY REQUIREMENTS FOR NATURAL OR MAN-MADE CHANNELS SHALL SATISFY THE FLOW RATE CAPACITY AND VELOCITY REQUIREMENTS FOR NATURAL OR MAN-MADE CHANNELS IF THE PRACTICES ARE DESIGNED TO (I) DETAIN THE WATER QUALITY VOLUME AND TO RELEASE IT OVER 48 HOURS; (II) DETAIN AND RELEASE OVER A 24-HOUR PERIOD THE EXPECTED RAINFALL RESULTING FROM THE ONE YEAR, 24-HOUR STORM; AND (III) REDUCE THE ALLOWABLE PEAK FLOW RATE RESULTING FROM THE 1.5, 2, AND 10-YEAR, 24-HOUR STORMS TO A LEVEL THAT IS LESS THAN OR EQUAL TO THE PEAK FLOW RATE FROM THE SITE ASSUMING IT WAS IN A GOOD FORESTED CONDITION, ACHIEVED THROUGH MULTIPLICATION OF THE FORESTED PEAK FLOW RATE BY A REDUCTION FACTOR THAT IS EQUAL TO THE RUNOFF VOLUME FROM THE SITE WHEN IT WAS IN A GOOD FORESTED CONDITION DIVIDED BY THE RUNOFF VOLUME FROM THE SITE IN ITS PROPOSED CONDITION, AND SHALL BE EXEMPT FROM ANY FLOW RATE CAPACITY AND VELOCITY REQUIREMENTS FOR NATURAL OR MAN-MADE CHANNELS AS DEFINED IN ANY REGULATIONS PROMULGATED PURSUANT TO § 10.1-562 OR 10.1-570 OF THE ACT.

M. FOR PLANS APPROVED ON AND AFTER JULY 1, 2014, THE FLOW RATE CAPACITY AND VELOCITY REQUIREMENTS OF § 10.1-561 A OF THE ACT AND THIS SUBSECTION SHALL BE SATISFIED BY COMPLIANCE WITH WATER QUANTITY REQUIREMENTS IN THE STORMWATER MANAGEMENT ACT (§ 10.1-603.2 ET SEQ. OF THE CODE OF VIRGINIA) AND ATTENDANT REGULATIONS, UNLESS SUCH LAND-DISTURBING ACTIVITIES ARE IN ACCORDANCE WITH 4VAC50-60-48 OF THE VIRGINIA STORMWATER MANAGEMENT PROGRAM (VSMP) PERMIT REGULATIONS.

N. COMPLIANCE WITH THE WATER QUANTITY MINIMUM STANDARDS SET OUT IN 4VAC50-60-66 OF THE VIRGINIA STORMWATER MANAGEMENT PROGRAM (VSMP) PERMIT REGULATIONS SHALL BE DEEMED TO SATISFY THE REQUIREMENTS OF MINIMUM STANDARD 19.

GENERAL EROSION AND SEDIMENT CONTROL NOTES

ES-1 UNLESS OTHERWISE INDICATED, ALL VEGETATIVE AND STRUCTURAL EROSION AND SEDIMENT CONTROL PRACTICES WILL BE CONSTRUCTED AND MAINTAINED ACCORDING TO MINIMUM STANDARDS AND SPECIFICATIONS OF THE VIRGINIA EROSION AND SEDIMENT CONTROL HANDBOOK (VESCH) AND VIRGINIA REGULATIONS 9VAC25-840 EROSION AND SEDIMENT CONTROL REGULATIONS. A COPY OF THE APPROVED EROSION AND SEDIMENT CONTROL PLAN SHALL BE MAINTAINED ON THE SITE AT ALL TIMES.

ES-2 THE CITY OF ROANOKE MUST BE NOTIFIED ONE WEEK PRIOR TO THE PRE-CONSTRUCTION CONFERENCE, ONE WEEK PRIOR TO THE COMMENCEMENT OF LAND DISTURBING ACTIVITY, AND ONE WEEK PRIOR TO THE FINAL INSPECTION.

ES-3 ALL EROSION AND SEDIMENT CONTROL MEASURES ARE TO BE PLACED PRIOR TO OR AS THE FIRST STEP IN CLEARING, GRADING OR LAND-DISTURBING AND SEQUENCE OF CONSTRUCTION APPROVED.

ES-4 A COPY OF THE APPROVED EROSION AND SEDIMENT CONTROL PLAN SHALL BE MAINTAINED ON THE SITE AT ALL TIMES.

ES-5 PRIOR TO LAND DISTURBING ACTIVITIES IN AREAS OTHER THAN INDICATED ON THESE PLANS OR OFF-SITE FILL ACTIVITIES, THE CONTRACTOR SHALL SUBMIT A SUPPLEMENTARY EROSION CONTROL PLAN TO THE OWNER FOR REVIEW AND FOR APPROVAL BY THE CITY OF ROANOKE.

ES-6 THE CONTRACTOR IS RESPONSIBLE FOR INSTALLATION OF ANY ADDITIONAL EROSION CONTROL MEASURES NECESSARY TO PREVENT EROSION AND SEDIMENTATION AS DETERMINED BY THE CITY OF ROANOKE.

ES-7 SITE GRADING IS TO DRAIN TO THE PERIMETER CONTROLS AT ALL TIMES DURING LAND DISTURBING ACTIVITIES AND DURING CONSTRUCTION, UNTIL FINAL STABILIZATION IS ACHIEVED.

ES-8 DURING DEWATERING OPERATIONS, WATER WILL BE PUMPED INTO AN APPROVED FILTERING DEVICE.

ES-9 THE CONTRACTOR SHALL INSPECT ALL EROSION CONTROL MEASURES PERIODICALLY (AT LEAST DAILY) AND AFTER EACH RUNOFF-PRODUCING RAINFALL EVENT. ANY NECESSARY REPAIRS OR CLEANUP TO MAINTAIN THE EFFECTIVENESS OF THE EROSION CONTROL DEVICES SHALL BE MADE IMMEDIATELY.

CONSTRUCTION PROCEDURE REQUIREMENTS

NOTICE: ALL LANDOWNERS, DEVELOPERS, AND CONTRACTORS – FAILURE TO COMPLY WITH THE CONSTRUCTION PROCEDURE REQUIREMENTS LISTED BELOW MAY RESULT IN THE COSTLY REMOVAL OF STRUCTURES, TIME DELAYS, OR THE ISSUANCE OF A STOP WORK ORDER.

1. RIGHT-OF-WAY EXCAVATION PERMIT – PRIOR TO THE COMMENCEMENT OF ANY DIGGING, ALTERATION OR CONSTRUCTION WITHIN THE PUBLIC RIGHT-OF-WAY (STREETS, ALLEYS, PUBLIC EASEMENTS), A RIGHT-OF-WAY EXCAVATION PERMIT SHALL BE APPLIED FOR AND OBTAINED BY THE CONTRACTOR FROM THE CITY OF ROANOKE.
2. PLANS AND PERMITS – A COPY OF THE PLANS AS APPROVED BY THE CITY (SIGNED BY THE PROPER CITY OFFICIALS) AND ALL PERMITS ISSUED BY THE CITY SHALL BE AVAILABLE AT THE CONSTRUCTION SITE AT ALL TIMES OF ONGOING CONSTRUCTION.
3. LOCATION OF UTILITIES – THE CONTRACTOR SHALL VERIFY THE LOCATION OF ALL EXISTING UTILITIES PRIOR TO THE COMMENCEMENT OF ANY CONSTRUCTION.
4. STREETS TO REMAIN CLEAN – IT SHALL BE THE RESPONSIBILITY OF THE CONTRACTOR TO ENSURE THAT THE PUBLIC STREET ADJACENT TO THE CONSTRUCTION ENTRANCE REMAINS FREE OF MUD, DIRT, DUST, AND/OR ANY TYPE OF CONSTRUCTION MATERIALS OR LITTER AT ALL TIMES.
5. BARRICADES/DITCHES – THE CONTRACTOR SHALL MAINTAIN THE INTEGRITY OF ALL EXCAVATED DITCHES AND SHALL FURNISH AND ENSURE THAT ALL BARRICADES PROPER AND NECESSARY FOR THE SAFETY OF THE PUBLIC ARE IN PLACE.
6. SEWER AND PAVEMENT REPLACEMENT – CONSTRUCTION OF STORM SEWERS AND THE REPLACEMENT OF PAVEMENT SHALL BE IN ACCORDANCE WITH APPROVED STANDARDS AND SPECIFICATIONS OF THE CITY OF ROANOKE AND THE WESTERN VIRGINIA WATER AUTHORITY.
7. APPROVED PLANS/CONSTRUCTION CHANGES – ANY CHANGE OR VARIATION FROM CONSTRUCTION DESIGN AS SHOWN ON THE OFFICIALLY APPROVED PLANS SHALL BE APPROVED BY THE EROSION AND SEDIMENT CONTROL AGENT PRIOR TO SAID CHANGES OR VARIATION BEING MADE.
8. FINAL ACCEPTANCE/CITY – THE OWNER OR DEVELOPER SHALL FURNISH THE CITY OF ROANOKE'S PLANNING BUILDING AND DEVELOPMENT DEPARTMENT WITH A FIELD SURVEYED FINAL CORRECT SET OF AS-BUILT PLANS OF THE NEWLY CONSTRUCTED STORM DRAIN AND/OR STORMWATER MANAGEMENT FACILITIES PRIOR TO FINAL ACCEPTANCE AND ISSUANCE OF A CERTIFICATE OF OCCUPANCY BY THE CITY. AS-BUILT PLANS SHALL BE PROVIDED IN THE STATE PLACE VIRGINIA SOUTH COORDINATE SYSTEM, NAD 1983, FIPS 4502 FEET, US SURVEY FEET, DATUM NA 83, IN THE FORM OF 1 PAPER COPY AND 1 DIGITAL AUTOCAD FILE.

GENERAL SITE & ESC NOTES:

1. GENERAL SITE INFORMATION:
   A. TOPOGRAPHIC SURVEY PERFORMED BY DRAPER ADEN ASSOCIATES DURING THE WEEK OF JANUARY 27, 2014. REFER TO SHEET C101 FOR ADDITIONAL SURVEY NOTES.
2. SITE CONSTRUCTION SHALL BE PERFORMED IN ACCORDANCE WITH THE FOLLOWING GENERAL REQUIREMENTS:
   A. FIELD LAYOUT SHALL BE BASED ON THE DIMENSIONS SHOWN ON THE DRAWINGS. DIMENSIONS ARE FROM INSIDE BOTTOM FACE OF CURB, UNLESS NOTED OTHERWISE.
   B. ALL WORK IS TO BE PERFORMED IN ACCORDANCE WITH FEDERAL, STATE, AND LOCAL REQUIREMENTS. IT IS THE CONTRACTOR'S RESPONSIBILITY TO OBTAIN ALL NECESSARY PERMITS PRIOR TO THE START OF CONSTRUCTION, AND TO PAY ALL NECESSARY PERMIT AND UTILITY CONNECTION FEES.
   C. NOTHING ON THESE CONTRACT DRAWINGS SHALL BE CONSTRUED AS A GUARANTEE THAT UTILITIES INDICATED AS EXISTING ARE IN THE LOCATION INDICATED OR THAT THEY ACTUALLY EXIST, OR THAT OTHER EXISTING UTILITIES ARE NOT WITHIN THE AREA OF OPERATIONS. PRIOR TO COMMENCEMENT OF WORK, THE CONTRACTOR SHALL MAKE ALL NECESSARY INVESTIGATIONS TO DETERMINE THE EXISTENCE, LOCATIONS, AND ELEVATIONS OF EXISTING UTILITIES IN THE WORK AREA. THE CONTRACTOR SHALL BE HELD RESPONSIBLE FOR THE PROTECTION OF EXISTING UTILITIES AND STRUCTURES WITHIN THE CONSTRUCTION ZONE. DAMAGE TO STRUCTURES, UTILITIES, AND EQUIPMENT TO REMAIN SHALL BE REPAIRED BY THE CONTRACTOR AT HIS EXPENSE, IN ACCORDANCE WITH THE STATE AND LOCAL REQUIREMENTS, THE OWNER'S REPRESENTATIVE, AND THE AUTHORITIES HAVING JURISDICTION. CONTRACTOR SHALL CONTACT MISS UTILITY AT 811, AT LEAST THREE WORKING DAYS PRIOR TO ANY EARTH MOVING OR DIGGING ACTIVITIES.
   D. CONTRACTOR SHALL OBTAIN ADVANCE APPROVAL FROM THE CITY OF ROANOKE FOR ANY WORK PERFORMED IN ROADWAYS OR WALKWAYS ADJACENT TO SITE AND FOR ANY DETOURING OF TRAFFIC. PROVIDE ALL SAFETY MEASURES AND DEVICES REQUIRED BY APPLICABLE REGULATORY AGENCIES. TRAFFIC SHALL BE MAINTAINED AT ALL TIMES IN ACCORDANCE WITH THE 2011 VIRGINIA WORK AREA PROTECTION MANUAL. ONE-WAY TRAFFIC WILL BE PERMITTED FOR LIMITED DISTANCES ONLY AS APPROVED BY THE CITY OF ROANOKE.
   E. CONTRACTOR SHALL BARRICADE OPEN EXCAVATIONS OCCURRING AS PART OF THIS WORK AND POST WITH WARNING LIGHTS. OPERATE WARNING LIGHTS AS RECOMMENDED BY AUTHORITIES HAVING JURISDICTION.
   F. IT IS THE CONTRACTOR'S RESPONSIBILITY TO COMPLY WITH SECTION 59.1-406, ET SEQ. OF THE CODE OF VIRGINIA (OVERHEAD HIGH VOLTAGE LINES SAFETY ACT).
   G. ALL IMPROVEMENTS AND WORK SHALL BE SUBJECT TO INSPECTION BY THE CITY OF ROANOKE AND ITS REPRESENTATIVES.
   H. CONTRACTOR SHALL MAINTAIN EMERGENCY, SERVICE, AND DELIVERY VEHICLE ACCESS TO THE SURROUNDING AREA; COORDINATE WITH THE CITY OF ROANOKE.
   I. CONTRACTOR SHALL MINIMIZE DISRUPTION OF PEDESTRIAN ACCESS. CONTRACTOR SHALL PROVIDE TEMPORARY CONSTRUCTION FENCE APPROXIMATELY ALONG ACTIVE LIMITS OF CONSTRUCTION AS SHOWN. CONTRACTOR SHALL MAKE NECESSARY ADJUSTMENTS IN CONSTRUCTION FENCING AND/OR INSTALL ADDITIONAL CONSTRUCTION FENCING AS REQUIRED TO MAINTAIN ACCESS REQUIREMENTS AND TO SEPARATE PEDESTRIAN TRAFFIC FROM THE ACTIVE CONSTRUCTION ZONE. ESTABLISH NEW PEDESTRIAN ACCESS ROUTES PRIOR TO ERECTING FENCE. APPROPRIATE DETOUR SIGNAGE SHALL BE MAINTAINED.
3. TOTAL DISTURBED AREA: WITHIN PAVED ROADWAY: 0.15 ACRES
   OUTSIDE PAVED ROADWAY: 0.04 ACRES
4. MINIMUM MEASURES ARE INDICATED. THE CONTRACTOR IS RESPONSIBLE FOR IMPLEMENTATION AND MAINTENANCE OF THESE MINIMUM REQUIREMENTS AND ALL OTHER MEASURES NECESSARY TO CONTROL, FILTER, AND PREVENT SEDIMENT FROM LEAVING THE SITE. EROSION CONTROL MEASURES SHALL BE PLACED PRIOR TO COMMENCEMENT OF UPSLOPE EARTHWORK ACTIVITIES. IN NO CASE DURING CONSTRUCTION SHALL WATER RUNOFF BE DIVERTED OR ALLOWED TO FLOW TO LOCATIONS WHERE ADEQUATE PROTECTION HAS NOT BEEN PROVIDED. EROSION AND SEDIMENT CONTROL MEASURES SHALL BE MAINTAINED UNTIL UPSLOPE DISTURBED AREAS ARE STABILIZED.
5. ALL WORK SHALL BE SUBJECT TO INSPECTION BY THE CITY OF ROANOKE AND THE COMMONWEALTH OF VIRGINIA DEPARTMENT OF ENVIRONMENTAL QUALITY. THESE AGENCIES HAVE THE RIGHT TO ADD OR DELETE E&SC CONTROLS IN THE FIELD. ANY CHANGES REQUIRED BY THE INSPECTOR OR NOTED DEFICIENCIES SHALL BE CORRECTED BY THE CONTRACTOR.
6. PERMANENT SEEDING SHALL BE APPLIED TO INDICATED AREAS WITHIN SEVEN DAYS AFTER FINAL GRADE IS REACHED ON ANY PORTION OF THE SITE. PERMANENT SEEDING SHALL ALSO BE APPLIED TO AREAS THAT ARE TO BE LEFT DORMANT FOR MORE THAN 1 YEAR.
7. IF PERMANENT SEEDING IS NOT APPLIED TO DENUDED AREAS WITHIN 7 DAYS AFTER FINAL GRADE IS REACHED ON ANY PORTION OF THE SITE, THE ASSOCIATED AREA SHALL BE TEMPORARILY SEEDED. TEMPORARY SEEDING SHALL BE APPLIED WITHIN 7 DAYS ON DENUDED AREAS THAT MAY NOT BE AT FINAL GRADE, BUT WILL REMAIN DORMANT (UNDISTURBED) FOR LONGER THAN 14 DAYS.
8. ENTRANCE LOCATIONS THAT ARE INDICATED MAY BE SHIFTED TO FIT FIELD CONDITIONS. ANY ENTRANCE THAT BECOMES ACTIVE PRIOR TO PERMANENT SITE STABILIZATION SHALL BE CLASSIFIED AS A "TEMPORARY STONE CONSTRUCTION ENTRANCE" AND SHALL BE INSTALLED IN ACCORDANCE WITH VESCH STANDARD AND SPECIFICATION NO. 3.02. DURING CONSTRUCTION, THE CONTRACTOR SHALL PERIODICALLY TOP-DRESS THE CONSTRUCTION ENTRANCE WITH CLEAN STONE. VEHICLES' TIRES SHALL BE WASHED IF THE CONSTRUCTION ENTRANCE FAILS TO REMOVE SOIL FROM THE TIRES OF VEHICLES ENTERING THE PAVED STREET. WASH WATER SHALL BE CARRIED AWAY FROM THE ENTRANCE TO AN APPROVED SETTLING AREA TO REMOVE SEDIMENT. WHERE SEDIMENT IS TRANSPORTED ONTO A PAVED ROAD SURFACE, THE ROAD SURFACE SHALL BE CLEANED THOROUGHLY AT THE END OF EACH DAY BY THE CONTRACTOR. SEDIMENT SHALL BE REMOVED FROM THE ROADS BY SHOVELING OR SWEEPING AND TRANSPORTED TO A TRAPPING DISPOSAL AREA. NO WASHING BEFORE SWEEPING AND SHOVELING. CONTRACTOR SHALL FLAG AND CONTROL TRAFFIC WHILE REMOVAL IS BEING PERFORMED.
9. DUST SHALL BE CONTROLLED IN ACCORDANCE WITH VESCH, STD. 3.39.
10. ALL EROSION AND SEDIMENT CONTROL MEASURES ARE TO BE INSTALLED BEFORE ANY UPSLOPE ACTIVITIES BEGIN.
11. THE METHODS AND STRATEGIES TO CONTAIN EROSION AND SEDIMENT AS LISTED IN THE DOCUMENT ENTITLED "EROSION AND SEDIMENT CONTROL NARRATIVE – ANDREWS/COVE ROAD STORMWATER DRAINAGE IMPROVEMENTS", SHALL BE FOLLOWED DURING CONSTRUCTION.
12. PRIOR TO COMMENCING LAND DISTURBING ACTIVITIES IN AREAS OTHER THAN INDICATED ON THESE PLANS (INCLUDING, BUT NOT LIMITED TO, OFF-SITE BORROW OR WASTE AREAS), THE CONTRACTOR SHALL SUBMIT A SUPPLEMENTARY EROSION CONTROL PLAN TO THE OWNER FOR REVIEW AND APPROVAL BY THE PLAN APPROVING AUTHORITY.
13. ADJUST WATER METER BOXES AS NECESSARY – CONTACT WESTERN VIRGINIA WATER AUTHORITY FOR CONSULTATION.
14. THE CONTRACTOR SHALL SUBMIT A TRAFFIC CONTROL PLAN TO THE CITY OF ROANOKE PRIOR TO LAND DISTURBANCE.

DESCRIPTION: THIS PROJECT INCLUDES CONSTRUCTION OF APPROXIMATELY 800 LINEAR FEET OF STORM SEWER TO PROVIDE DRAINAGE TO AN EXISTING LOW AREA NEAR THE INTERSECTION OF COVE ROAD AND ANDREWS DRIVE.

NOTE: CONTRACTOR TO CONTACT MISS UTILITY (811) IN ADVANCE OF PLANNED WORK. ADVANCE TIME PERIOD SHALL BE IN ACCORDANCE WITH CURRENT MISS UTILITY GUIDELINES (www.missutilityofvirginia.com).

DESIGN TICKET: A400602026

ALWAYS CARE BEFORE YOU DIG — CALL "MISS UTILITY" — KEEP VIRGINIA SAFE!

EROSION & SEDIMENT CONTROL PHASING NOTES:

1. AS FIRST STEP MEASURES, CONSTRUCTION ENTRANCES, SILT FENCE, AND INLET PROTECTION SHALL BE INSTALLED AS INDICATED PRIOR TO UPSLOPE LAND DISTURBANCE.
2. THROUGHOUT CONSTRUCTION ACTIVITIES, APPLY DUST CONTROL MEASURES ACCORDING TO VESCH STD. & SPEC. 3.39.
3. PERMANENT SEEDING AND MULCH WILL BE USED ON ALL DISTURBED AREAS THAT ARE NOT SCHEDULED TO RECEIVE CONCRETE SURFACING OR LANDSCAPING (HARDWOOD MULCH, ETC.) ONCE BROUGHT TO FINAL GRADE.
4. ALL TEMPORARY EROSION AND SEDIMENT CONTROL MEASURES SHALL BE REMOVED WITHIN 30 DAYS AFTER FINAL SITE STABILIZATION OR AFTER TEMPORARY MEASURES ARE NO LONGER NEEDED, UNLESS OTHERWISE AUTHORIZED BY THE LOCAL PROGRAM AUTHORITY. TRAPPED SEDIMENT AND THE DISTURBED SOIL AREAS RESULTING FROM THE DISPOSITION OF TEMPORARY MEASURES SHALL BE PERMANENTLY STABILIZED TO PREVENT FURTHER EROSION AND SEDIMENTATION.

DRAPER ADEN ASSOCIATES REVIEW

THESE PLANS HAVE BEEN SUBJECTED TO TECHNICAL AND QUALITY REVIEWS BY:

NAME	ROLE	SIGNATURE	DATE
ANDREW J. HEMMEN, E.I.T.	PROJECT DESIGNER	[signature]	1/12/15
MATTHEW B. JAMES, P.E.	PROJECT ENGINEER	[signature]	1/12/2015
CAROLYN A. HOWARD, P.E.	QUALITY REVIEWER	Carolyn A. Howard	1/12/15

LEGEND

EXISTING		PROPOSED
1000	CONTOURS	1000
× 1561.3	GROUND ELEVATION	1528.3 / TC 1528.3
	SHRUB	N/A
	TREE	N/A
	TREELINE	N/A
x x	FENCE	N/A
	PROPERTY LINE/ROW	
	BUILDING	N/A
	ASPHALT	N/A
	CONCRETE	N/A
	GRAVEL	N/A
	SIGN	N/A
	BOLLARD	N/A
	STORM SEWER	
	STORM CLEANOUT	N/A
	STORM MANHOLE	
	STORM DRAINAGE INLET	
	SANITARY MANHOLE	N/A
ss	SANITARY SEWER	N/A
uge	UNDERGROUND ELECTRIC	N/A
ohp	OVERHEAD POWER	N/A
	GUY WIRE	N/A
	LIGHT POLE	N/A
	ELECTRIC POLE	
	ELECTRIC MANHOLE	N/A
w	WATER	N/A
	WATER VALVE	N/A
	FIRE HYDRANT	N/A
	WATER MANHOLE	N/A
	STEAM MANHOLE	N/A
cns	CNS	N/A
t	TELEPHONE LINE	N/A
ugt	UNDERGROUND TELEPHONE	N/A
	TELEPHONE BOX	N/A
	TELEPHONE MANHOLE	N/A
	TELEPHONE PEDESTAL	N/A
	TELEPHONE POLE	N/A
	ROD FOUND	N/A
	MONUMENT FOUND	N/A
	BENCHMARK	N/A
	SURFACE DRAINAGE	N/A
IPF	IRON PIN FOUND	N/A

These documents, including drawings and specifications, were prepared by Draper Aden Associates, Consulting Engineers, pursuant to a contract by and between Draper Aden Associates and the City of Roanoke with respect to the project described in said contract. Any reuse or modification of said documents (whether hard copy or electronic) without written verification or adaptation by Draper Aden Associates for the specific purpose intended will be at the sole risk of the individual or entity utilizing said documents, drawings and specifications and such use is without the authorization of Draper Aden Associates. Draper Aden Associates, Consulting Engineers, shall have no legal liability resulting from any and all claims, damages, losses, and expenses, including attorney's fees arising out of the unauthorized use of these documents, drawings, specifications, reports, and studies prepared as a result of the aforesaid contract.

COMMONWEALTH OF VIRGINIA — MATTHEW BRUCE JAMES — Lic. No. 0402050828 — 1/12/2015 — PROFESSIONAL ENGINEER

Draper Aden Associates
Engineering • Surveying • Environmental Services
Blacksburg, VA — 2206 South Main Street, Blacksburg, VA 24060 — 540-552-0444 Fax: 540-552-0291 — www.daa.com
Richmond, VA
Charlottesville, VA
Hampton Roads, VA

GENERAL NOTES AND LEGEND
ANDREWS/COVE ROAD STORMWATER DRAINAGE IMPROVEMENTS
ROANOKE, VIRGINIA

REVISIONS

DESIGNED BY:	MBJ
DRAWN BY:	MBJ
CHECKED BY:	CAH
SCALE:	NO SCALE
DATE:	JANUARY 12, 2015
PROJECT NUMBER:	B13179B-01
	C002

EXISTING SANITARY STRUCTURE DATA

(A) sanitary manhole
top 1079.31
6" inv. in 1071.42 SW
8" inv. in 1071.39 NW
6" inv. in 1071.41 NE
10" Inv. out 1071.31 SE

(B) sanitary manhole
top 1085.26
6" inv. in 1077.68 NW
6" inv. in 1077.71 NW
6" inv. in 1077.72 NE
8" inv. out 1077.61 SE

EXISTING STORM STRUCTURE DATA

(1) curb inlet
top 1082.42
15" inv. in 1079.21 SW
15" inv. out 1079.17 NE

(2) grate inlet
top 1081.21
15" inv. in 1079.26 SE
15" inv. in 1079.31 NW
15" inv. out 1079.21 NE

(3) grate inlet
top 1081.52
12" inv. in 1079.82 SE (plugged)
15" inv. out 1079.82 NW

(4) grate inlet
top 1082.04
15" inv. in 1079.76 NW
15" inv. out 1079.73 SE

(5) curb inlet
top 1083.21
15" inv. in 1080.53 W
15" inv. out 1080.51 SE

(6) grate inlet
top 1082.55
15" inv. out 1080.12 E

SURVEY NOTES:

1. SOURCE OF MERIDIAN: VIRGINIA STATE PLANE, SOUTH ZONE, (NAD 83)BASED UPON: STATIC GPS SESSIONS PREFORMED BY DRAPER ADEN ASSOCIATES.
2. 2.) VERTICAL DATUM: (NAVD) BASED UPON: STATIC GPS SESSIONS PREFORMED BY DRAPER ADEN ASSOCIATES.
3. THIS SURVEY WAS PREPARED WITHOUT THE BENEFIT OF A TITLE COMMITMENT OR TITLE REPORT AND ALL EASEMENTS AND ENCUMBRANCES THAT MIGHT BE DISCLOSED IN A TITLE SEARCH MAY NOT BE SHOWN.
4. UTILITIES SHOWN ARE BASED UPON: MISS UTILITY, TICKET # A400602026, VISIBLE EVIDENCE AND COMPILED RECORDS.
5. THIS TOPOGRAPHIC SURVEY, ANDREWS ROAD DRAINAGE IMPROVEMENTS WAS COMPLETED UNDER THE DIRECT AND RESPONSIBLE CHARGE OF LOREN W. KNIGHTING FROM AN ACTUAL GROUND SURVEY MADE UNDER MY SUPERVISION; THAT THE IMAGERY AND/OR ORIGINAL DATA WAS OBTAINED ON THE WEEK OF JAN. 27, 2014; AND THAT THIS PLAT AND/OR MAP MEETS MINIMUM ACCURACY STANDARDS UNLESS OTHERWISE NOTED.
6. CONTOUR INTERVAL: 1'.
7. THIS SURVEY WAS PREPARED FOR THE CITY OF ROANOKE. DRAPER ADEN ASSOCIATES ASSUMES NO LIABILITY FOR REUSE OR MODIFICATION OF THIS DOCUMENT.
8. PROPERTY LINES SHOWN HEREON ARE COMPILED FROM RECORD INFORMATION.
9. DRAPER ADEN ASSOCIATES PROVIDES BENCHMARKS FOR THE CONSTRUCTION OF THE IMPROVEMENTS SHOWN ON THESE PLANS. ALL OTHER EXISTING ELEVATIONS ARE FOR REFERENCE TO EXISTING CONDITIONS ONLY. DO NOT USE SPOT ELEVATIONS, FINISH FLOOR ELEVATIONS, ELEVATIONS ON MANHOLES, ELEVATIONS ON SURVEY NAILS, SURVEY HUBS, CONTROL POINTS (HORIZONTAL POINTS PROVIDED) OR ANY OTHER POINTS FOR CONSTRUCTION OTHER THAN THE PROVIDED BENCHMARKS. FAILURE TO UTILIZE AND VERIFY THE PROVIDED BENCHMARKS COULD RESULT IN DAMAGES AND ADDITIONAL COST THAT ARE THE CONTRACTOR'S RESPONSIBILITY.
10. REFER TO SHEET C002 FOR GENERAL NOTES AND LEGEND.

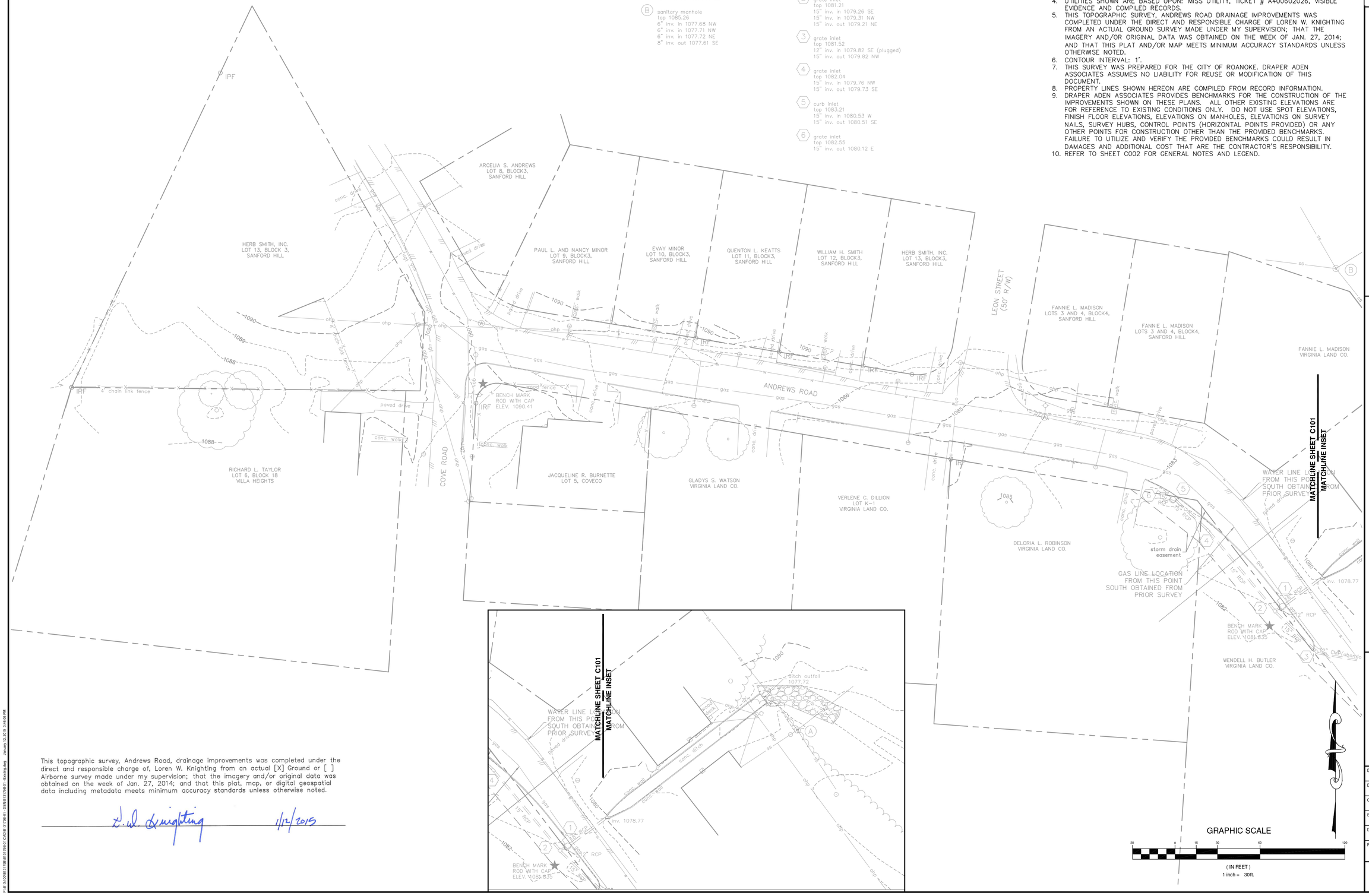

This topographic survey, Andrews Road, drainage improvements was completed under the direct and responsible charge of, Loren W. Knighting from an actual [X] Ground or [ ] Airborne survey made under my supervision; that the imagery and/or original data was obtained on the week of Jan. 27, 2014; and that this plat, map, or digital geospatial data including metadata meets minimum accuracy standards unless otherwise noted.

L. W. Knighting 1/12/2015

COMMONWEALTH OF VIRGINIA
L. W. KNIGHTING
Lic. No. 1460
1/12/2015
LAND SURVEYOR

Draper Aden Associates
Engineering • Surveying • Environmental Services
Blacksburg, VA
2905 South Main Street
Blacksburg, VA 24060
540-552-0444 Fax: 540-552-0291
www.daa.com
Richmond, VA
Charlottesville, VA
Hampton Roads, VA

EXISTING CONDITIONS
ANDREWS/COVE ROAD STORMWATER DRAINAGE IMPROVEMENTS
ROANOKE, VIRGINIA

REVISIONS

DESIGNED BY:	MBJ
DRAWN BY:	MBJ
CHECKED BY:	CAH
SCALE:	1" = 30'
DATE:	JANUARY 12, 2015
PROJECT NUMBER:	B13179B-01

C101

EXISTING SANITARY STRUCTURE DATA

(A) sanitary manhole
top 1079.31
6" inv. in 1071.42 SW
8" inv. in 1071.39 NW
6" inv. in 1071.41 NE
10" inv. out 1071.31 SE

(B) sanitary manhole
top 1085.26
6" inv. in 1077.68 NW
6" inv. in 1077.71 NW
6" inv. in 1077.72 NE
8" inv. out 1077.61 SE

EXISTING STORM STRUCTURE DATA

(1) curb inlet
top 1082.42
15" inv. in 1079.21 SW
15" inv. out 1079.17 NE

(2) grate inlet
top 1081.21
15" inv. in 1079.26 SE
15" inv. in 1079.31 NW
15" inv. out 1079.21 NE

(3) grate inlet
top 1081.52
12" inv. in 1079.82 SE (plugged)
15" inv. out 1079.82 NW

(4) grate inlet
top 1082.04
15" inv. in 1079.76 NW
15" inv. out 1079.73 SE

(5) curb inlet
top 1083.21
15" inv. in 1080.53 W
15" inv. out 1080.51 SE

(6) grate inlet
top 1082.55
15" inv. out 1080.12 E

EROSION & SEDIMENT CONTROL LEGEND

No.	TITLE	KEY	SYMBOL
3.07	STORM DRAIN INLET PROTECTION	IP	
3.30	TOPSOILING	TO	TO
3.32	PERMANENT SEEDING	PS	PS
3.35	MULCHING	MU	MU

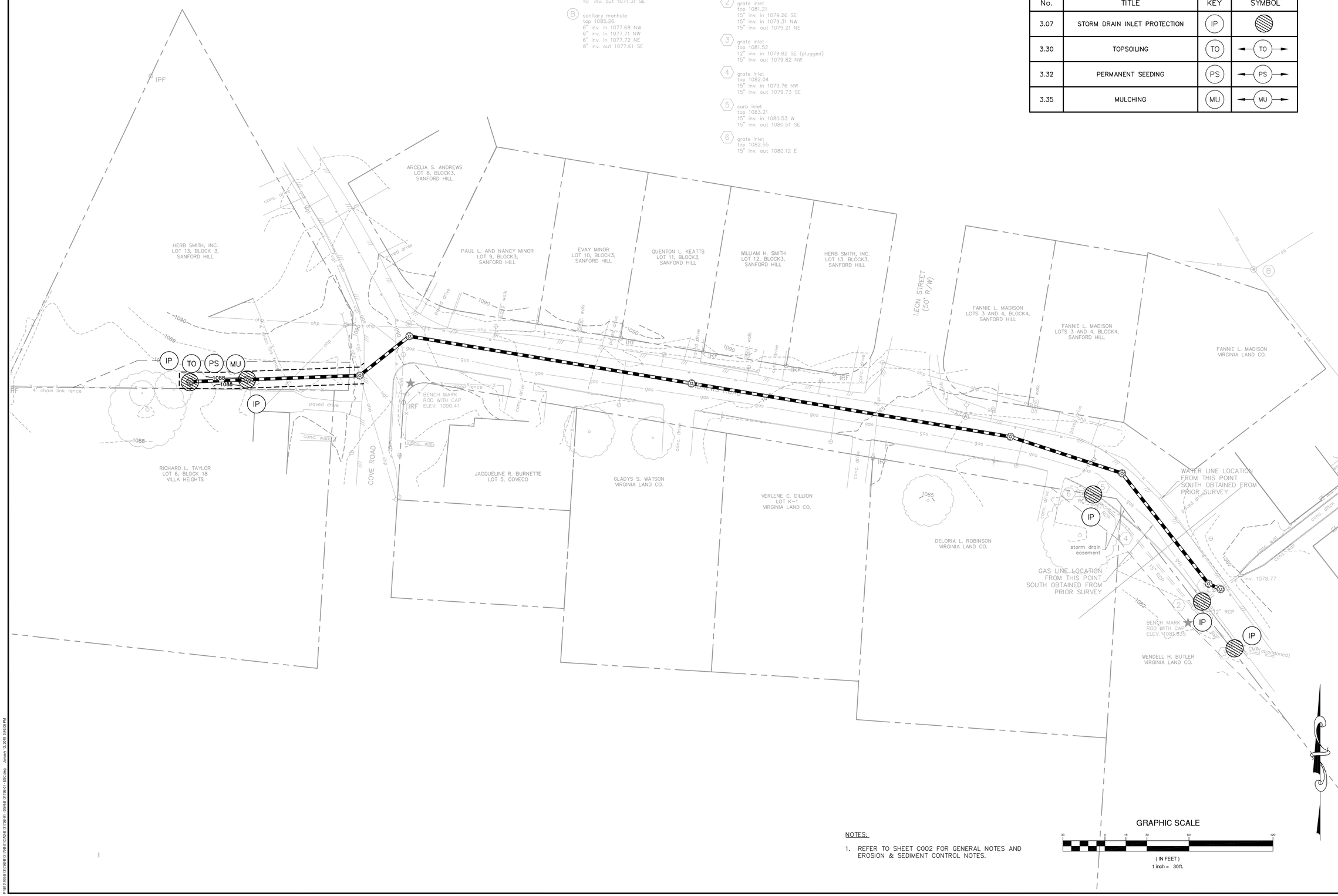

NOTES:

1. REFER TO SHEET C002 FOR GENERAL NOTES AND EROSION & SEDIMENT CONTROL NOTES.

GRAPHIC SCALE

30 0 15 30 60 120

(IN FEET)
1 inch = 30ft.

COMMONWEALTH OF VIRGINIA
MATTHEW BRUCE JAMES
Lic No 0402050828
1/12/2015
PROFESSIONAL ENGINEER

Draper Aden Associates
Engineering • Surveying • Environmental Services
Blacksburg, VA
2905 South Main Street
Blacksburg, VA 24060
540-552-0444 Fax: 540-552-0291
www.daa.com
Richmond, VA
Charlottesville, VA
Hampton Roads, VA

EROSION & SEDIMENT CONTROL PLAN
ANDREWS/COVE ROAD STORMWATER DRAINAGE IMPROVEMENTS
ROANOKE, VIRGINIA

REVISIONS

DESIGNED BY:	MBJ
DRAWN BY:	MBJ
CHECKED BY:	CAH
SCALE:	1" = 30'
DATE:	JANUARY 12, 2015
PROJECT NUMBER:	B13179B-01

C201

J:\B13100\B13179B\B13179B-01\CAD\B13179B-01 - DSN\B13179B-01 - ESC.dwg January 12, 2015 3:44:09 PM

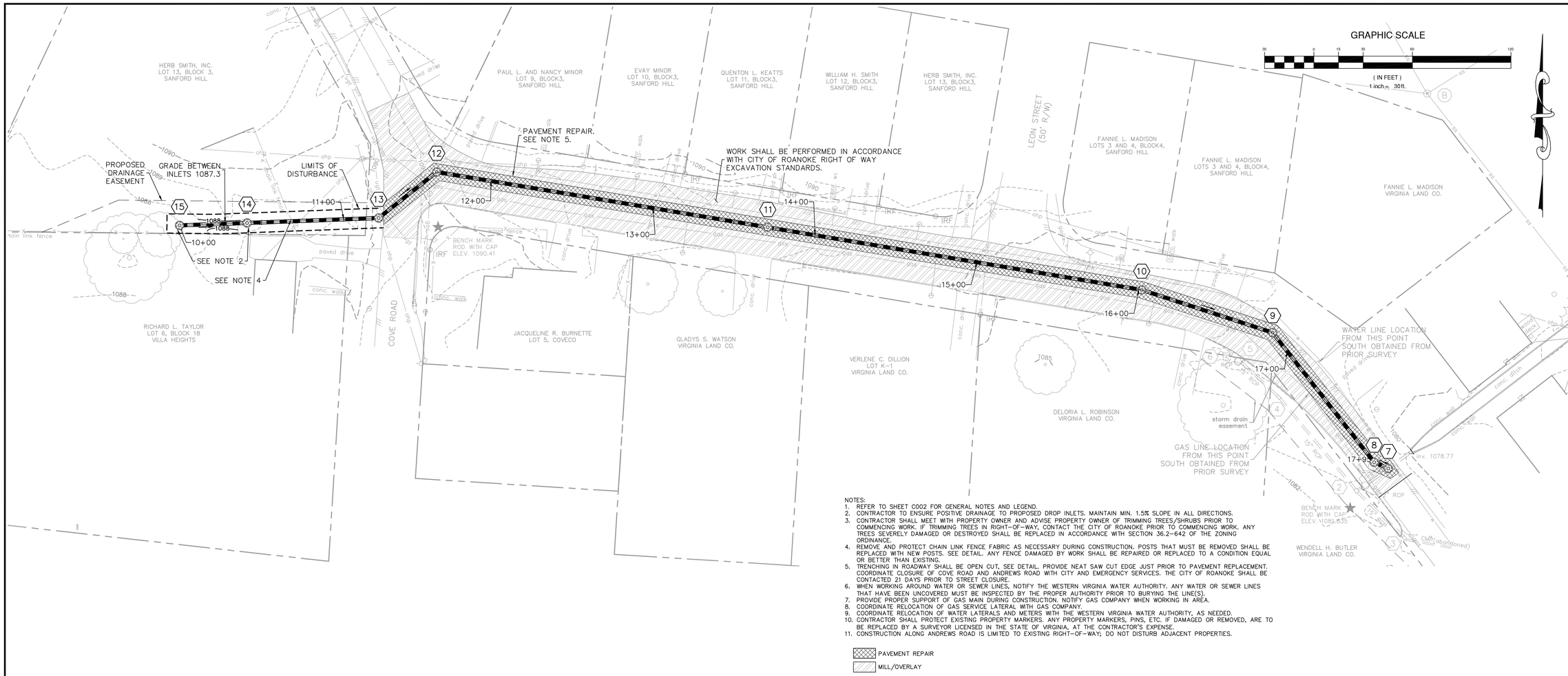

NOTES:

1. REFER TO SHEET C002 FOR GENERAL NOTES AND LEGEND.
2. CONTRACTOR TO ENSURE POSITIVE DRAINAGE TO PROPOSED DROP INLETS. MAINTAIN MIN. 1.5% SLOPE IN ALL DIRECTIONS.
3. CONTRACTOR SHALL MEET WITH PROPERTY OWNER AND ADVISE PROPERTY OWNER OF TRIMMING TREES/SHRUBS PRIOR TO COMMENCING WORK. IF TRIMMING TREES IN RIGHT-OF-WAY, CONTACT THE CITY OF ROANOKE PRIOR TO COMMENCING WORK. ANY TREES SEVERELY DAMAGED OR DESTROYED SHALL BE REPLACED IN ACCORDANCE WITH SECTION 36.2-642 OF THE ZONING ORDINANCE.
4. REMOVE AND PROTECT CHAIN LINK FENCE FABRIC AS NECESSARY DURING CONSTRUCTION. POSTS THAT MUST BE REMOVED SHALL BE REPLACED WITH NEW POSTS. SEE DETAIL. ANY FENCE DAMAGED BY WORK SHALL BE REPAIRED OR REPLACED TO A CONDITION EQUAL OR BETTER THAN EXISTING.
5. TRENCHING IN ROADWAY SHALL BE OPEN CUT, SEE DETAIL. PROVIDE NEAT SAW CUT EDGE JUST PRIOR TO PAVEMENT REPLACEMENT. COORDINATE CLOSURE OF COVE ROAD AND ANDREWS ROAD WITH CITY AND EMERGENCY SERVICES. THE CITY OF ROANOKE SHALL BE CONTACTED 21 DAYS PRIOR TO STREET CLOSURE.
6. WHEN WORKING AROUND WATER OR SEWER LINES, NOTIFY THE WESTERN VIRGINIA WATER AUTHORITY. ANY WATER OR SEWER LINES THAT HAVE BEEN UNCOVERED MUST BE INSPECTED BY THE PROPER AUTHORITY PRIOR TO BURYING THE LINE(S).
7. PROVIDE PROPER SUPPORT OF GAS MAIN DURING CONSTRUCTION. NOTIFY GAS COMPANY WHEN WORKING IN AREA.
8. COORDINATE RELOCATION OF GAS SERVICE LATERAL WITH GAS COMPANY.
9. COORDINATE RELOCATION OF WATER LATERALS AND METERS WITH THE WESTERN VIRGINIA WATER AUTHORITY, AS NEEDED.
10. CONTRACTOR SHALL PROTECT EXISTING PROPERTY MARKERS. ANY PROPERTY MARKERS, PINS, ETC. IF DAMAGED OR REMOVED, ARE TO BE REPLACED BY A SURVEYOR LICENSED IN THE STATE OF VIRGINIA, AT THE CONTRACTOR'S EXPENSE.
11. CONSTRUCTION ALONG ANDREWS ROAD IS LIMITED TO EXISTING RIGHT-OF-WAY; DO NOT DISTURB ADJACENT PROPERTIES.

PAVEMENT REPAIR

MILL/OVERLAY

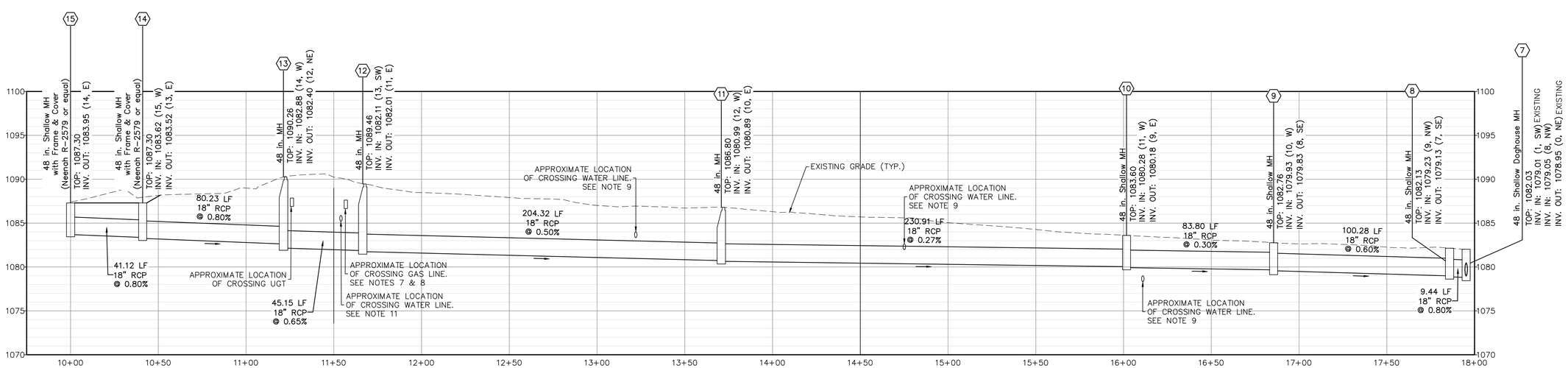

STORM SEWER PROFILE
Scale: H: 1"=30', V: 1"=6'

COMMONWEALTH OF VIRGINIA
MATTHEW BRUCE JAMES
Lic No 0402050828
1/12/2015
PROFESSIONAL ENGINEER

Draper Aden Associates
Engineering • Surveying • Environmental Services
Blacksburg, VA 2790 Pratt Drive, Suite 1 Blacksburg, VA 24060 540-552-4444 Fax: 540-552-0291 www.daa.com
Richmond, VA Charlottesville, VA Hampton Roads, VA

PLAN & PROFILE
ANDREWS/COVE ROAD STORMWATER DRAINAGE IMPROVEMENTS
ROANOKE, VIRGINIA

REVISIONS

DESIGNED BY:	MBJ
DRAWN BY:	MBJ
CHECKED BY:	CAH
SCALE:	1" = 30'
DATE:	JANUARY 12, 2015
PROJECT NUMBER:	B13179B-01

C301

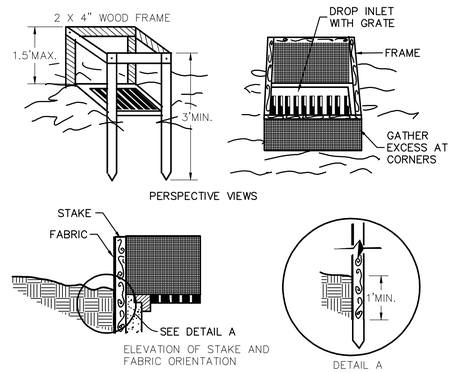

SPECIFIC APPLICATION

THIS METHOD OF INLET PROTECTION IS APPLICABLE WHERE THE INLET DRAINS A RELATIVELY FLAT AREA (SLOPE NO GREATER THAN 5%) WHERE THE INLET SHEET OR OVERLAND FLOWS (NOT EXCEEDING 1 C.F.S.) ARE TYPICAL. THE METHOD SHALL NOT APPLY TO INLETS RECEIVING CONCENTRATED FLOWS, SUCH AS IN STREET OR HIGHWAY MEDIANS.

(IP) DROP INLET INLET PROTECTION

NO SCALE

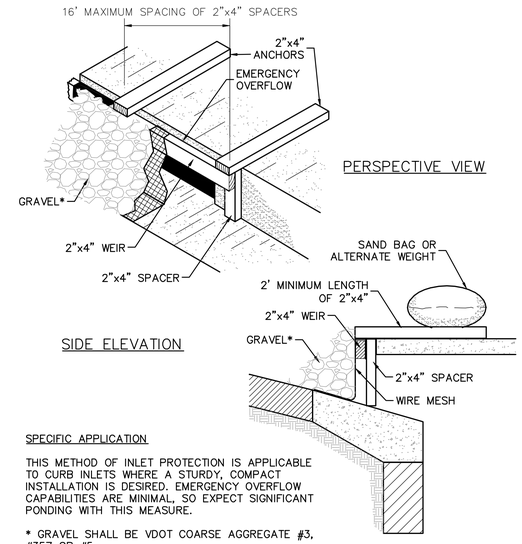

SPECIFIC APPLICATION

THIS METHOD OF INLET PROTECTION IS APPLICABLE TO CURB INLETS WHERE A STURDY, COMPACT INSTALLATION IS DESIRED. EMERGENCY OVERFLOW CAPABILITIES ARE MINIMAL, SO EXPECT SIGNIFICANT PONDING WITH THIS MEASURE.

* GRAVEL SHALL BE VDOT COARSE AGGREGATE #3, #357 OR #5

(IP) CURB INLET PROTECTION

NO SCALE

GENERAL SLOPE (3:1 OR LESS)	TOTAL LBS PER ACRE
KENTUCKY 31 FESCUE	200 LBS.
KENTUCKY BLUEGRASS	10 LBS.
RED TOP GRASS	10 LBS.
SEASONAL NURSE CROP	30 LBS.
WHITE CLOVER	2 LBS.
	252 LBS.

SEASONAL NURSE CROP	
MARCH, APRIL THROUGH MAY 15	ANNUAL RYE
MAY 16 THROUGH AUGUST 15	FOXTAIL
AUGUST 16 THROUGH	MILLET
SEPTEMBER,OCTOBER	ANNUAL RYE
NOVEMBER THROUGH FEBRUARY	WINTER RYE

LIME AND FERTILIZER NEEDS SHALL BE DETERMINED BY SOIL TESTS.

SEEDINGS TO BE MULCHED AT THE RATE OF 2 TONS PER ACRE WITH TACKIFIED STRAW, IMMEDIATELY UPON COMPLETION OF SEED APPLICATION, IN ACCORDANCE W/ VA E&S STD 3.35.

(PS) PERMANENT SEEDING SCHEDULE

ACCEPTABLE TEMPORARY SEEDING PLANT MATERIALS

PLANTING DATES	SPECIES	RATE (LBS/ACRE)
SEPT 1–FEB 15	50/50 MIX OF ANNUAL RYEGRASS (LOLIUM MULTI–FLORUM) & CEREAL (WINTER) RYE (SECALE CEREALE)	50–100
FEB 16–APR 20	ANNUAL RYEGRASS (LOLIUM MULTI–FLORUM)	60–100
MAY 1–AUG 31	GERMAN MILLET (SETARIA ITALICA)	50

SEEDINGS MADE IN FALL FOR WINTER COVER AND DURING HOT AND DRY SUMMER MONTHS SHALL BE MULCHED IMMEDIATELY UPON COMPLETION OF SEED APPLICATION WITH TACKIFIED STRAW, IN ACCORDANCE WITH VA E&S STD 3.35.

(TS) TEMPORARY SEEDING SCHEDULE

SEEDING SCHEDULES

NO SCALE

COMMONWEALTH OF VIRGINIA
MATTHEW BRUCE JAMES
Lic No 0402050828
1/12/2015
PROFESSIONAL ENGINEER

Draper Aden Associates
Engineering • Surveying • Environmental Services
Blacksburg, VA
2905 South Main Street
Blacksburg, VA 24060
540-552-0444 Fax: 540-552-0291
www.daa.com
Richmond, VA
Charlottesville, VA
Hampton Roads, VA

EROSION AND SEDIMENT CONTROL DETAILS

ANDREWS/COVE ROAD STORMWATER DRAINAGE IMPROVEMENTS

ROANOKE, VIRGINIA

REVISIONS

DESIGNED BY:	MBJ
DRAWN BY:	MBJ
CHECKED BY:	CAH
SCALE:	NO SCALE
DATE:	JANUARY 12, 2015
PROJECT NUMBER:	B13179B-01

C401

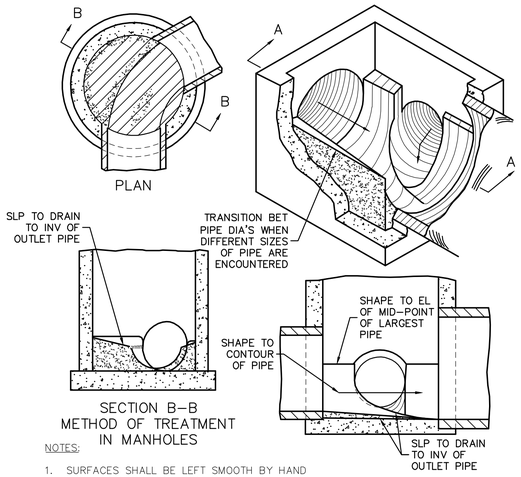

SECTION B–B
METHOD OF TREATMENT
IN MANHOLES

SECTION A–A
METHOD OF TREATMENT
IN DROP INLETS

NOTES:

1. SURFACES SHALL BE LEFT SMOOTH BY HAND TROWELING. COARSE AGGR SHALL NOT REMAIN EXPOSED.
2. DET'S OF INV SHAPING AS SHOWN HEREON ARE FOR EXAMPLE PURPOSES ONLY. EACH MH OR DI SHALL BE SHAPED INDIVIDUALLY TO FIT THE PARTICULAR INLET AND OUTLET CONFIGURATION AND FLOW LINES.

METHOD OF SHAPING MANHOLE AND INLET INVERTS

NO SCALE

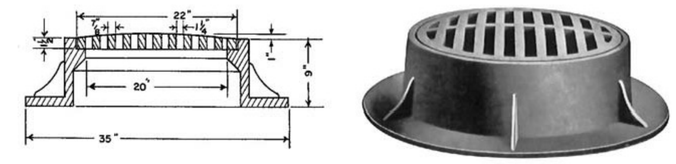

CATALOG NUMBER	GRATE TYPE	SQ. FT. OPEN	WEIR PERIMETER LINEAL FEET
R-2579	B	1.3	5.8

NOTES:

FRAME AND COVER TO BE NEENAH R–2579 OR APPROVED EQUAL.

MANHOLE FRAME & COVER

NO SCALE

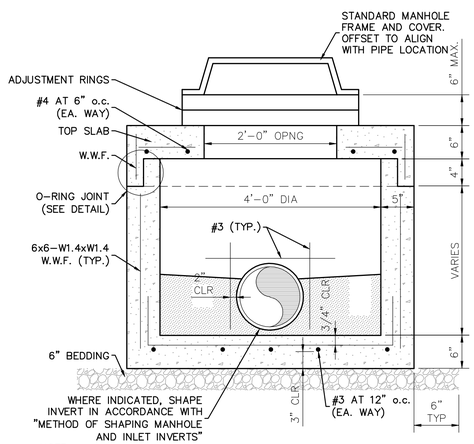

NOTE:
USE FLUSH TYPE FRAME AND COVER (C61) WHERE MANHOLE DEPTH IS NOT SUFFICIENT FOR STANDARD FRAME AND COVER, AND WHERE FLUSH TYPE FRAME AND COVER IS INDICATED ON PLANS OR PROFILES.

PRECAST SHALLOW MANHOLE DETAIL

NO SCALE

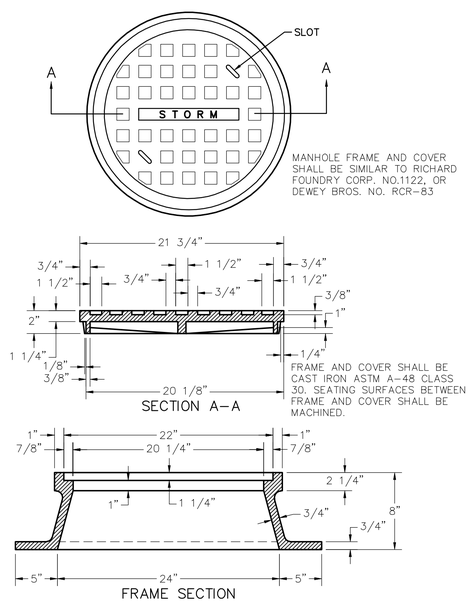

STANDARD MANHOLE FRAME AND COVER

NO SCALE

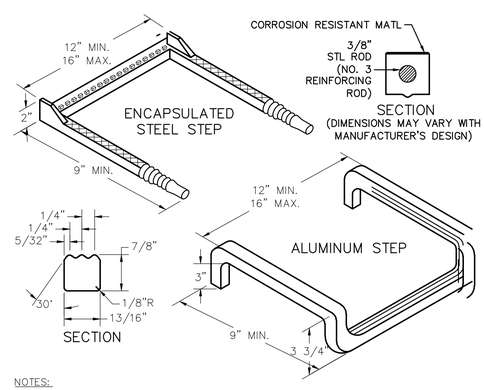

NOTES:

1. STEPS WILL BE REQUIRED IN ALL STRUCTURES WITH A DEPTH 4'–0" OR GREATER UNLESS OTHERWISE NOTED ON THE PLANS.
2. ALL STEPS SHALL PROTRUDE 5" FROM THE INSIDE FACE OF STRUCTURE WALL.
3. THE MAXIMUM STEP SPACING SHALL BE 1'–4" CENTER TO CENTER.
4. STEPS SHALL WITHSTAND A MINIMUM LOAD OF 300 POUNDS WHEN EXTENDED 5" FROM THE FACE OF THE SUPPORT.
5. STEPS ARE TO BE VERTICALLY ALIGNED AND UNIFORMLY SPACED FOR THE ENTIRE DEPTH OF ANY STRUCTURE.
6. IN PRECAST UNITS, STEPS MAY BE CAST IN PLACE OR MORTARED INTO HOLES PROVIDED BY THE FABRICATOR.
7. STEPS DIFFERING IN DIMENSIONS, CONFIGURATIONS OR MATERIALS FROM THOSE SHOWN MAY ALSO BE USED PROVIDED THEY MEET THE MINIMUM REQUIREMENTS SHOWN HEREON AND THE CONTRACTOR HAS FURNISHED THE ENGINEER WITH DETAILS AND CERTIFIED TEST REPORTS OF THE PROPOSED SUBSTITUTE AND HAS RECEIVED WRITTEN APPROVAL FOR THE USE OF SUCH STEPS FROM THE ENGINEER.
8. PORTION OF AL STEP EMBEDDED IN CONC SHALL BE COATED W/ AN ASPHALT COATING.

MANHOLE STEP

NO SCALE

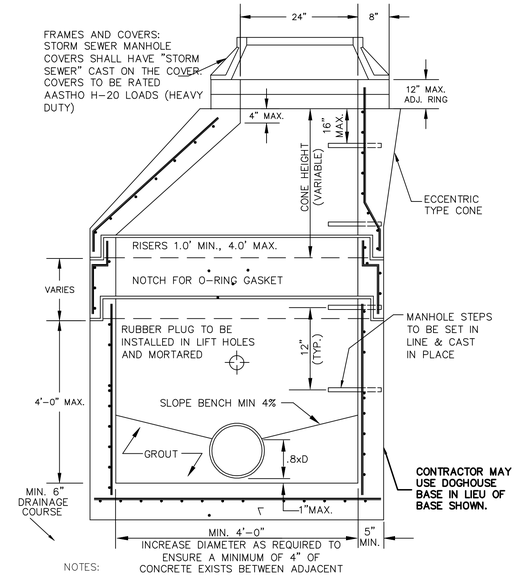

NOTES:

1. MANHOLE TO MEET CURRENT REQUIREMENTS OF ASTM C–478.
2. CONCRETE TO BE 4000 PSI MINIMUM COMPRESSIVE STRENGTH.
3. ALL REINFORCING STEEL TO MEET CURRENT REQUIREMENTS OF ASTM A–615.
4. TAPERED JOINT WITH O–RING GASKET TO MEET CURRENT REQUIREMENTS OF ASTM C–361 & C–443.
5. COLD APPLIED JOINT SEALER (SAHOM–98) SHALL BE USED IN ADDITION TO THE JOINT SPECIFIED.
6. FLEXIBLE JOINT (KOR–N–SEAL OR EQUAL) REQUIRED ON ALL PIPE CONNECTIONS TO MANHOLES. VOIDS SHALL BE FILLED FLUSH WITH INSIDE FACE OF MANHOLE WITH NON–SHRINK GROUT.

TYPICAL PRECAST CONCRETE MANHOLE

NO SCALE

COMMONWEALTH OF VIRGINIA
MATTHEW BRUCE JAMES
Lic No 0402050828
1/12/2015
PROFESSIONAL ENGINEER

Draper Aden Associates
Engineering • Surveying • Environmental Services
Blacksburg, VA
2905 South Main Street
Blacksburg, VA 24060
540-552-0444 Fax: 540-552-0291
www.daa.com
Richmond, VA
Charlottesville, VA
Hampton Roads, VA

STORM STRUCTURE DETAILS
ANDREWS/COVE ROAD STORMWATER DRAINAGE IMPROVEMENTS
ROANOKE, VIRGINIA

REVISIONS

DESIGNED BY:	MBJ
DRAWN BY:	MBJ
CHECKED BY:	CAH
SCALE:	NO SCALE
DATE:	JANUARY 12, 2015
PROJECT NUMBER:	B13179B-01

C402

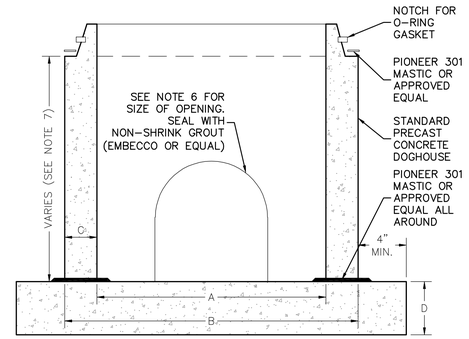

NOTES:
1. CONCRETE TO BE CLASS A-4
2. ALL REINFORCING TO MEET CURRENT REQUIREMENTS OF ASTM A-615.
3. MANHOLE SECTIONS TO MEET REQUIREMENTS OF CURRENT ASTM SPEC. C-478.
4. TAPERED JOINT WITH O-RING GASKET TO MEET CURRENT REQUIREMENTS OF ASTM SPEC. C-361.
5. DOGHOUSE OPENING MAY ONLY BE USED WHEN PLACING A NEW MH OVER AN EXISTING LINE; OTHERWISE, THE OPENING MUST BE CAST. SIZE, LOCATION & ANGLE OF ENTRY SHALL BE AS REQUIRED BY THE PLANS.
6. HOLES IN PRECAST UNITS ARE TO BE 4" MIN. TO 8" MAX. LARGER THAN THE OUTSIDE DIA. OF THE PROPOSED PIPE.
7. BASE SECTION TO PROVIDE MIN. 6" CLEARANCE BETWEEN TOP OF PIPE OPENING AND BOTTOM OF BELL AND SPIGOT JOINT.
8. BASE SECTION SHALL BE REINFORCED WITH #4 AT 6" O.C. EACH WAY.
9. CONTRACTOR IS TO SAWCUT AND REMOVE TOP HALF OF EXISTING PIPE. BENCH AND INVERT SHALL BE CONSTRUCTED USING CONCRETE.

	MINIMUM DIMENSIONS		
MH	4'-0"	5'-0"	6'-0"
A	48"	60"	72"
B	58"	72"	86"
C	5"	6"	7"
D	8"	10"	10"

TYPICAL PRECAST CONCRETE MANHOLE DOGHOUSE BASE
NOT TO SCALE

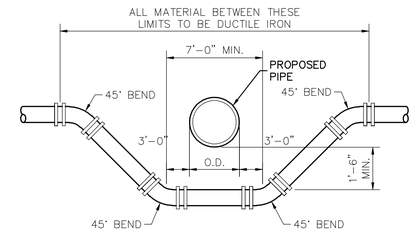

NOTE:
USE RETAINER GLANDS ON 45° BENDS.

TYPICAL METHOD OF ADJUSTING WATERLINES
NOT TO SCALE

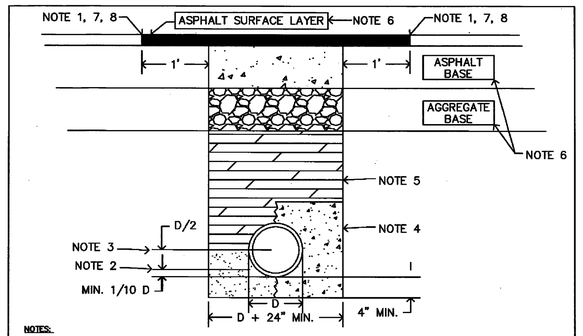

NOTES:

1. ALL PAVEMENTS SHALL BE SAW CUT WITH NEAT, UNIFORM LINES PRIOR TO EXCAVATION.
2. PIPE BEDDING MATERIAL SHALL BE CRUSHER RUN (VDOT NO. 25 OR 28) OR OPEN GRADED AGGREGATE (VDOT NO. 57, 68, 7, OR 8). ALTERNATE MATERIAL MUST BE APPROVED BY THE TRANSPORTATION DIVISION INSPECTOR.
3. MAXIMUM DEPTH OF PIPE BEDDING MATERIAL IF USING OPEN GRADED AGGREGATE FOR BEDDING.
4. OPTIONAL CONCRETE ENCASEMENT FOR POWER OR COMMUNICATION CONDUIT. PROVIDE A MINIMUM OF 4" CONCRETE COVER FROM ALL SIDES OF CONDUIT.
5. BACKFILL MATERIAL SHALL BE VDOT NO. 21A AGGREGATE OR FLOWABLE FILL.
   A. AGGREGATE SHALL BE PLACED IN LOOSE LIFTS NOT EXCEEDING 6", AND COMPACTED TO AT LEAST 95% MAXIMUM DRY DENSITY WITHIN 2 PERCENTAGE POINTS OF OPTIMUM MOISTURE (VTM-1) WITH THE USE OF MECHANICAL TAMPERS OR VIBRATORY ROLLERS. WATER COMPACTION IS NOT PERMITTED. LOCAL MATERIAL CLASSIFIED AS TYPE I SELECT MATERIAL MAY BE USED AS BACKFILL UPON PRIOR APPROVAL BY THE TRANSPORTATION DIVISION. SEE STANDARDS FOR ADDITIONAL INFORMATION ON DENSITY AND TESTING REQUIREMENTS.
   B. FLOWABLE FILL, IF USED, SHALL MEET THE REQUIREMENTS OF VDOT'S SPECIAL PROVISION FOR FLOWABLE BACKFILL. THE MATERIAL SHALL BE PLANT-CERTIFIED TO PROVIDE A 28-DAY COMPRESSIVE STRENGTH BETWEEN 30 AND 200 PSI. SEE STANDARDS FOR ADDITIONAL INFORMATION ON DENSITY AND TESTING REQUIREMENTS
6. RESTORATION OF ASPHALT PAVEMENT SHALL CONFORM TO SECTION 5.1 OF THE STANDARDS.
7. THE REPAIR SHALL BE RECTANGULAR AND SAW CUT IN STRAIGHT, UNIFORM LINES THAT ARE ALIGNED WITH THE STREET CENTERLINE. WHEN EDGES OF PAVEMENT HAVE BEEN UNDERMINED, PAVEMENT SHALL BE REMOVED TO A NEAT LINE 12" BEYOND THE UNDERMINED AREA. ANY INITIAL PAVEMENT REPAIR WITH AN AREA GREATER THAN 40 SQUARE FEET MAY BE NON-RECTANGULAR, HOWEVER, THE REPAIR SHALL BE SAW CUT IN STRAIGHT, UNIFORM LINES. ANY OTHER DEVIATION ON PATCH SHAPE MUST BE APPROVED BY THE INSPECTOR PRIOR TO THE REPAIR BEING MADE. THE FINISHED PATCH SURFACE SHALL BE WITHIN 1/4 INCH AT ANY POINT ACROSS THE PATCH AS IT RELATES TO THE SURROUNDING STREET SURFACE.
8. A FULL COVERAGE TACK COAT IS REQUIRED ON ALL SURFACES THAT WILL CONTACT THE NEW SURFACE LAYER.

DATE: July 1, 2013	UTILITY TRENCH REPAIR	UTR-1

1. SETTER TO BE A.Y. McDONALD 20-215WXDD33, FORD VB72-15W-11-33 OR APPROVED EQUAL.
2. SADDLES MUST BE USED WITH ALL PLASTIC & DUCTILE IRON PIPE. SERVICE SADDLES SHALL BE USED IN ACCORDANCE WITH WATER DISTRIBUTION PIPING SPECIFICATION. SERVICE SADDLES FOR PLASTIC PIPE SHALL BE: POWERSEAL 3417, OR 3412AS, ROMAC 202S, OR 306, OR FORD METER FS202 OR FS303. FOR DUCTILE IRON PIPE USE THE ABOVE OR POWERSEAL 3413, ROMAC 202 OR FORD METER F202.
3. METER BOX SHALL BE CARSON/MID-STATES PLASTICS, INC. PLASTIC BOX WITH FORD A32-T (ELECTRONIC READ LID) OR A. Y. McDONALD MODEL 74M32CTC CAST IRON BASE & COVER OR APPROVED EQUAL. METER BOX SHALL NOT BE PLACED IN AREAS SUBJECT TO VEHICULAR TRAFFIC. IF TRAFFIC BEARING BOX IS REQUIRED, DESIGN ENGINEER SHALL CONSULT WITH PARTICIPATING UTILITY TO DETERMINE SITE SPECIFIC REQUIREMENTS.
4. CORPORATION STOP SHALL BE FORD F1000-4-G OR APPROVED EQUAL.
5. SERVICE SHALL BE "K" TYPE COPPER, OR COPPER TUBE SIZE POLYETHYLENE (PE) 4710, SODR-9 (200 psi).
6. WHENEVER SIDEWALK EXISTS OR IS PROPOSED, MODIFY METER LOCATION AS DIRECTED.

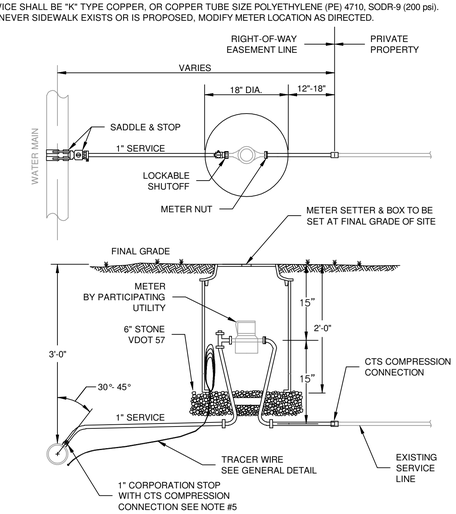

RESIDENTIAL WATER SERVICE ADJUSTMENT
NO SCALE

COMMONWEALTH OF VIRGINIA
MATTHEW BRUCE JAMES
Lic No 0402050828
1/12/2015
PROFESSIONAL ENGINEER

Draper Aden Associates
Engineering • Surveying • Environmental Services
Blacksburg, VA
2905 South Main Street
Blacksburg, VA 24060
540-552-0444 Fax: 540-552-0291
www.daa.com
Richmond, VA
Charlottesville, VA
Hampton Roads, VA

UTILITY & SITE DETAILS
ANDREWS/COVE ROAD STORMWATER DRAINAGE IMPROVEMENTS
ROANOKE, VIRGINIA

REVISIONS

DESIGNED BY:	MBJ
DRAWN BY:	MBJ
CHECKED BY:	CAH
SCALE:	NO SCALE
DATE:	JANUARY 12, 2015
PROJECT NUMBER:	B13179B-01

C403

J:\B13\B13179B\B13179B-01\CAD\B13179B-01 DSHB-01.DWG Details.dwg January 12, 2015 1:46:14 PM