PUB. RD. REGION	STATE	FEDERAL AID ROUTE	FEDERAL AID PROJECT	STATE ROUTE	STATE PROJECT	SHEET NO.	TOTAL SHEETS
2	VA.	—	—	24	0024-149-102, PE101, B601	11 (1)	

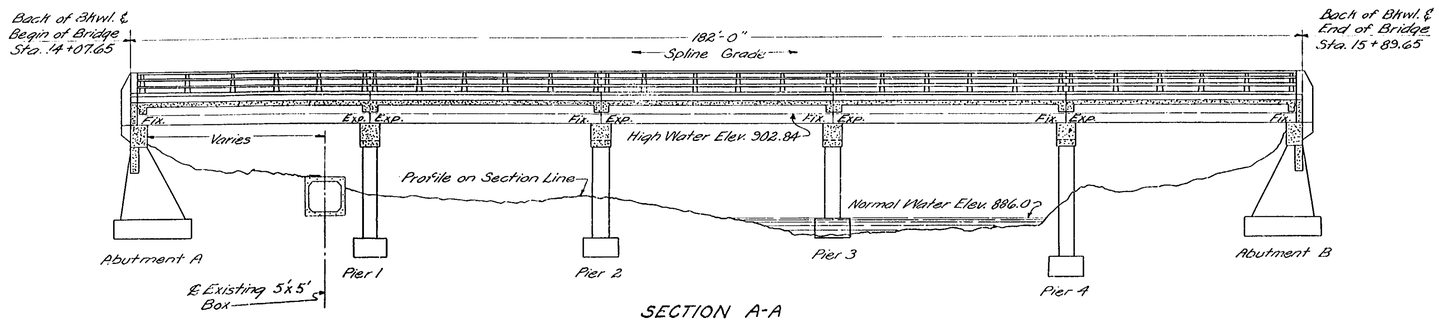

SECTION A-A

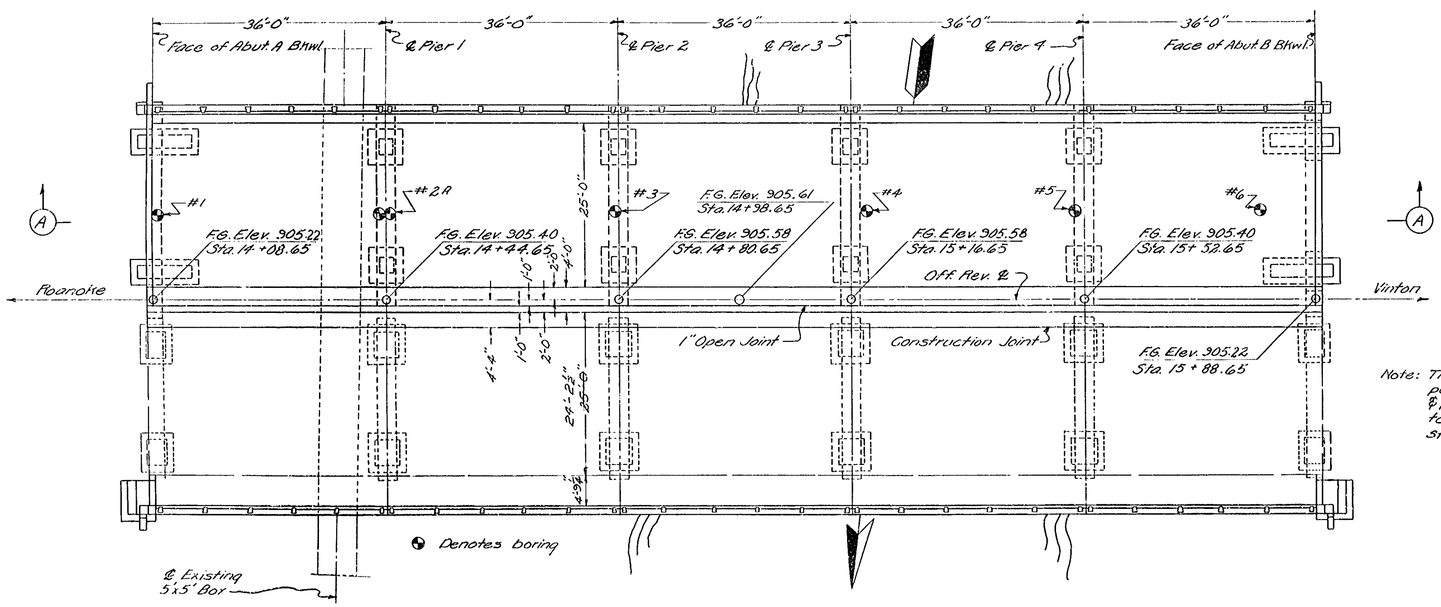

PLAN

GENERAL NOTE:

Roadway: ~~28'-0"~~ 24'-2½" clear EBL & 25'-0" clear WBL. 1-4'-9¼" sidewalk. 4'-0" median strip.

Capacity: HS20-44 loading and B.P.R modified loading for military vehicles.

Specifications:

General - Virginia Department of Highways Road and Bridge Specifications, 1966.

Design - A.A.S.H.O. Standard Specifications for Highway Bridges, 1961, and Interim Specifications thru 1964.

Concrete in superstructure shall be Class A4. All other concrete shall be Class A3, unless otherwise noted.

All reinforcing bar dimensions on the detailed drawings are to centers of bars except where otherwise noted.

Footings shall rest on solid rock. Bearing capacity of foundation shall be 4 tons/sq. ft. min.

Structure excavation above Elev. 886.0 shall be classified as "A"; below, as "B".

Existing structure is shown on plans CXXIV-17 & 18.

Cost of removal of existing Bituminous surfacing shall be included in price bid for new Bituminous surfacing material.

Either steel railing shown on sheet 15 or aluminum railing shown on sheet 14 may be used for North & South Railing.

B.M.: Chiseled "Δ" on south side west Abut. Dale Ave. Br. Elev. 905.48

No Linseed Oil Treatment shall be used on bridge deck where Waterproofing Class I is required.

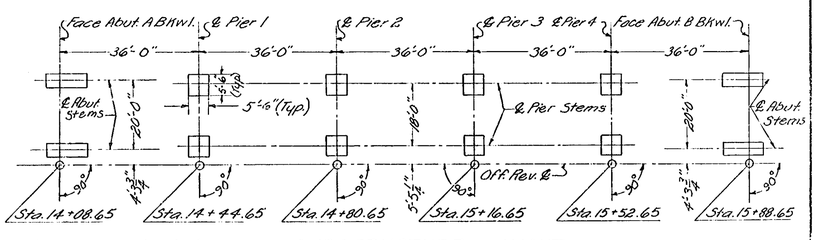

Note: This layout is to be used only for purpose of location of footings of Abuts. & Piers. A field check shall be made to determine the consistency between stations & dimensions given.

SUBSTRUCTURE LAYOUT
Not to Scale
(Showing outlines of Footings)

AS BUILT

COMMONWEALTH OF VIRGINIA
DEPARTMENT OF HIGHWAYS
PROPOSED WIDENING OF BRIDGE
RTE. 24 OVER TINKERS CREEK
TOWN OF VINTON—CITY OF ROANOKE
PROJ. 0024-149-102, B601-STA. 15+00
5-36 FT. CONC. BEAM SPANS

Richmond, Virginia

Recommended For Approval: J. M. Chaney 3-14-67
Bridge Engineer

Recommended For Approval: C. E. Trumbauer 3-16-67
Director of Engineering

Approved: J. E. Kerrwood 3-16-67
Deputy Commissioner and Chief Engineer

FINAL ESTIMATED QUANTITES

	Concrete Cu. Yds. Class A4	Concrete Cu. Yds. Class A3	Reinforcing Steel Lbs.	Excavation Cu. Yds. A	Excavation Cu. Yds. B	Bituminous Concrete Surfacing-Type S-5 Tons	Pneumatically Applied Mortar Sq. Ft.	Bridge Railing L.F.	Waterproofing Class I Sq. Yds.
Superstructure	~~329.3~~ 332.3	502	76,210						
Abutment A	~~337.6~~ 337.6*	~~49.1~~	~~6,340~~ 5,220	~~118~~ 117	~~10~~ 7	~~195~~ 91.5	80	360	~~1034~~ 1045
Pier 1	27.2	~~24.3~~	~~3,920~~ 3,715	~~27~~ 29	~~20~~ 15				
Pier 2	24.4	~~24.3~~	~~3,920~~ 3,830	~~8~~ 17	~~25~~ 20				
Pier 3	23.8	~~32.9~~	~~5,720~~ 3,710	~~0~~ 0	~~7~~ 3				
Pier 4	24.5	~~35.7~~	~~4,120~~ 3,600	~~11~~ 14	~~18~~ 19				
Abutment B	10.4	~~47.6~~	~~5,340~~ 5,100	~~120~~ 105	~~10~~ 0				1045
Totals	~~329.3~~ 332.3	~~193.3~~ 190.5	~~102,570~~ 101,575	278 282	114 64	~~195~~ 91.5	80	360	~~1034~~

* Plan Quantity Error

Finals Posted by Salem Dist. Off. June, 1969

DRAWN BY: W.A.R.
TRACED BY: JDE
CHECKED BY: RWS

Revised: Sept. 12, 1967
March 1, 1967

Scale: ¼" = 1'-0"

CCIX-7
Sheet 1 of 18

1-7 0-6 0 2

PUB. RD REGION	STATE	FEDERAL AID ROUTE	FEDERAL AID PROJECT	STATE ROUTE	STATE PROJECT	SHEET NO	TOTAL SHEETS
2	VA.			24	0024-149-102, PE101B601	11(2)	

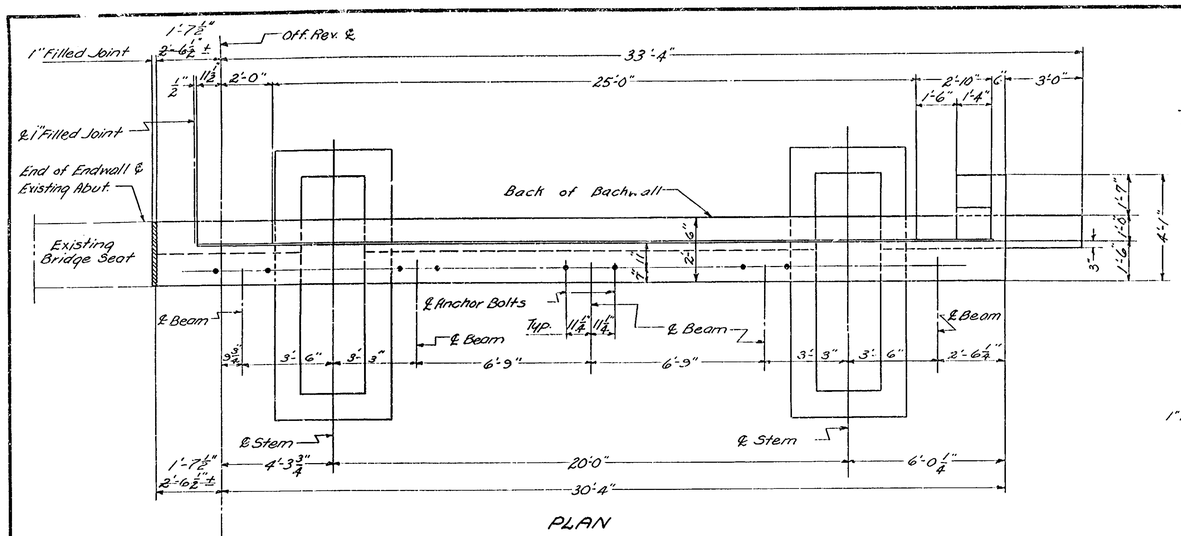

PLAN

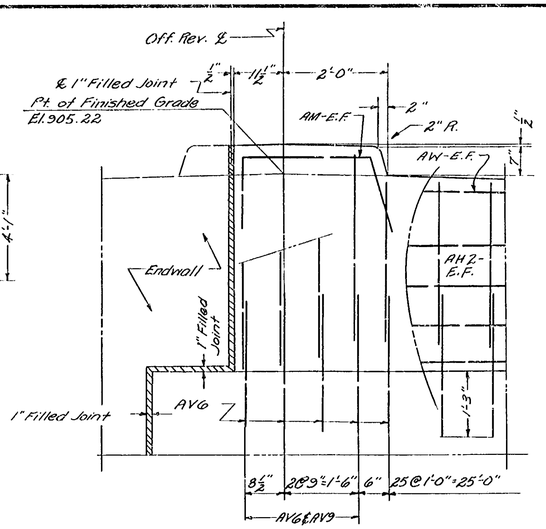

DETAIL A
Scale: 3/4" = 1'-0"

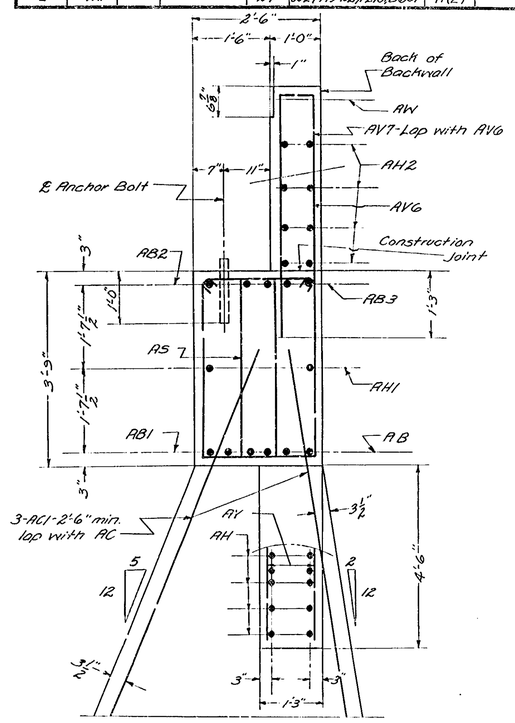

SECTION A-A
Scale: 3/4" = 1'-0"

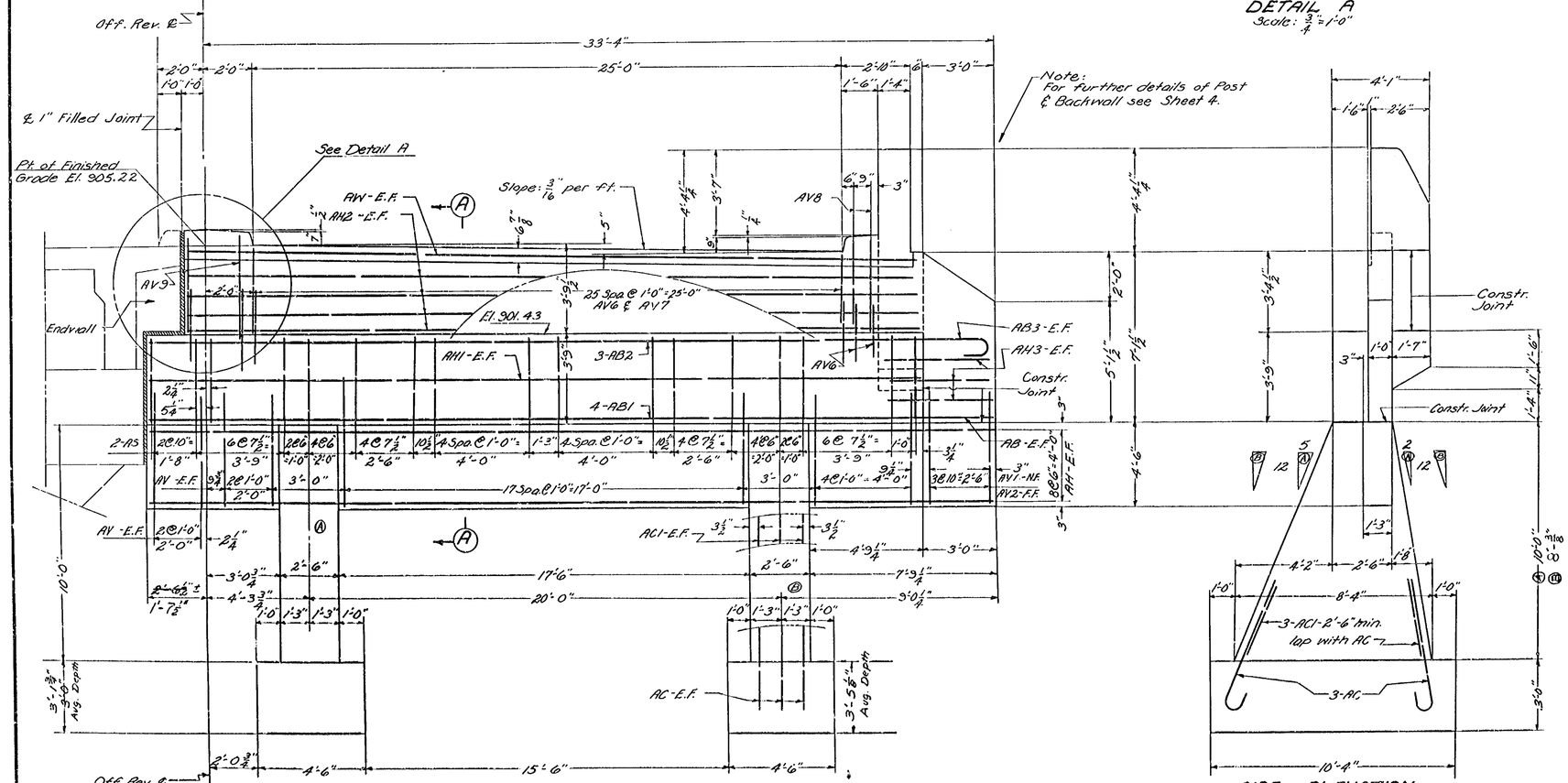

FRONT ELEVATION
Scale: 3/8" = 1'-0"

Note: For further details of Post & Backwall see Sheet 4.

SIDE ELEVATION
Scale: 3/8" = 1'-0"

RTE. 24 OVER TINKERS CREEK

ABUTMENT A -- NORTH

Virginia Department of Highways
Office of the Bridge Engineer
Richmond, Virginia

DRAWN BY: NL
TRACED BY: JDE
CHECKED BY: LGL

March 1, 1967

CCIX-7
Sheet 2 of 18

2009-07-02

PUB. RD. REGION	STATE	FEDERAL AID ROUTE	FEDERAL AID PROJECT	STATE ROUTE	STATE PROJECT	SHEET NO.	TOTAL SHEETS
2	VA.	—	—	24	0024-149-102, PE101, B601	11(3)	

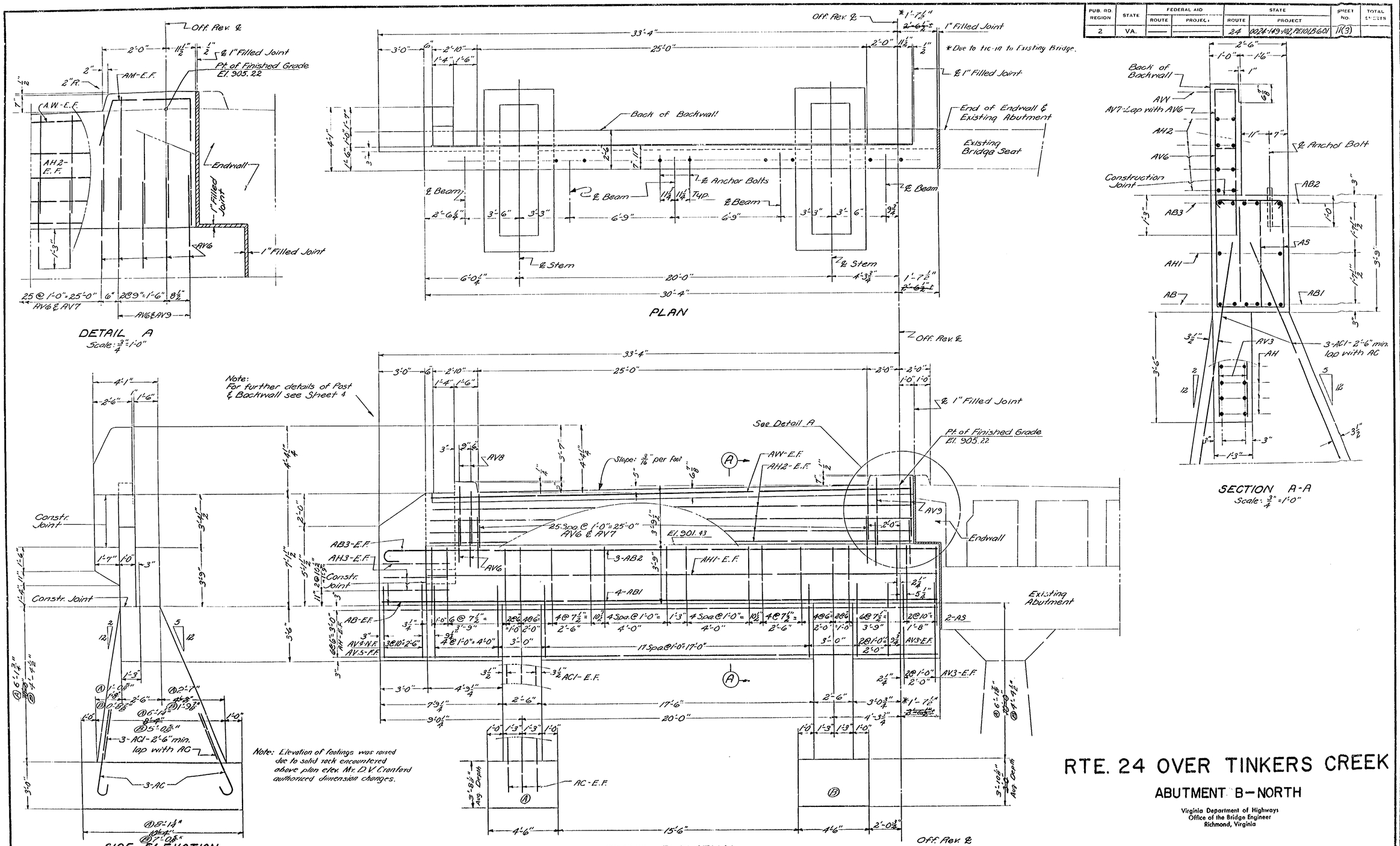

RTE. 24 OVER TINKERS CREEK

ABUTMENT B—NORTH

Virginia Department of Highways
Office of the Bridge Engineer
Richmond, Virginia

DRAWN BY: N.K.L.
TRACED BY: J.D.E.
CHECKED BY: L.G.L.

March 1, 1967

CCIX-7
Sheet 3 of 18

2-09-07-03

PUB. RD REGION	STATE	FEDERAL AID ROUTE	FEDERAL AID PROJECT	STATE ROUTE	STATE PROJECT	SHEET NO.	TOTAL SHEETS
2	VA.			24	0024-149-102, PE101, B601	11(4)	

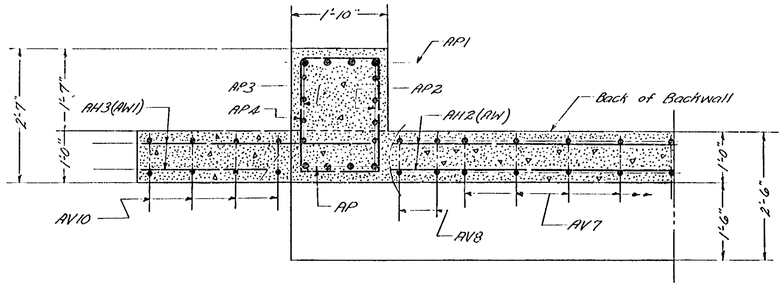

SECTION C-C

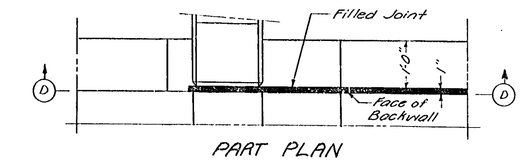

PART PLAN

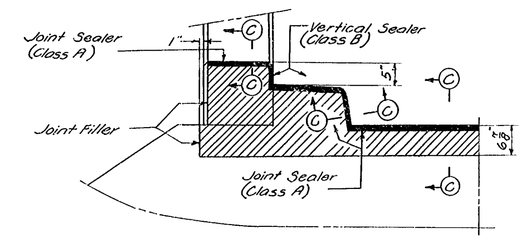

SECTION D-D

For Section C-C see Sheet 9.

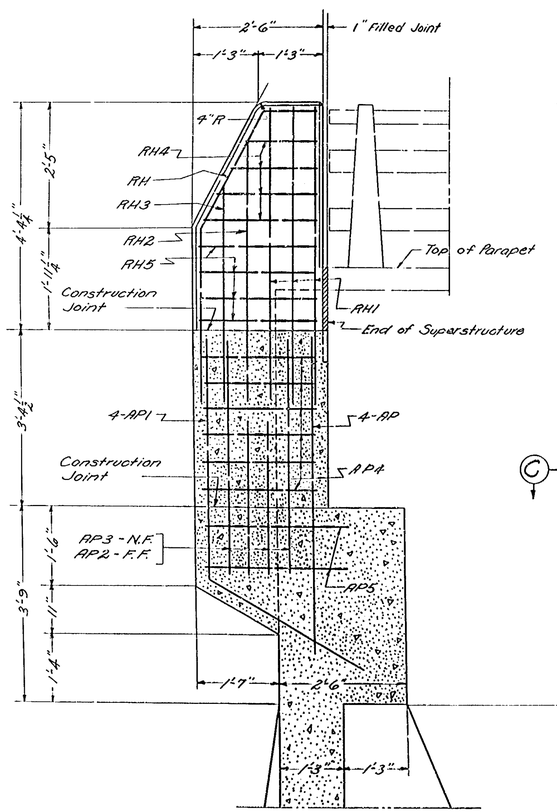

SECTION A-A

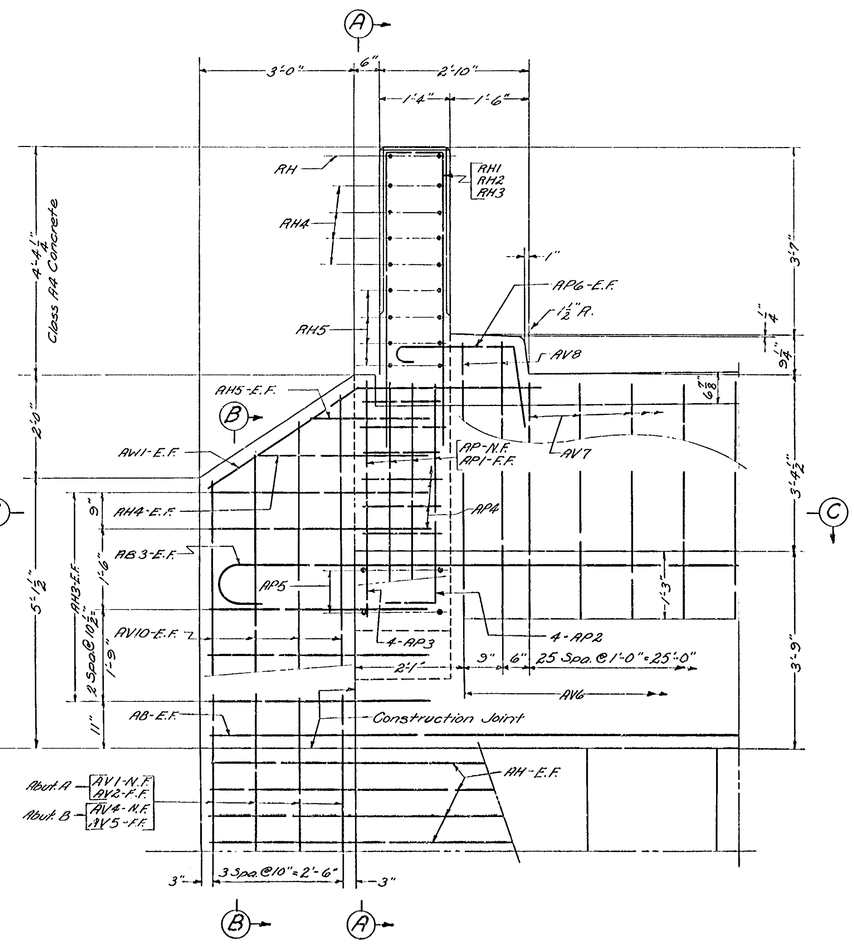

PART ELEVATION

Abutment B- as shown
Abutment A- opposite hand

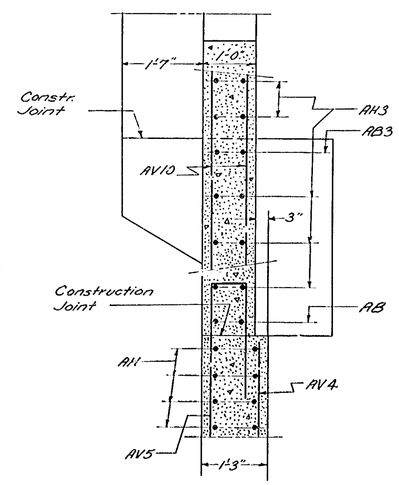

SECTION B-B

RTE. 24 OVER TINKERS CREEK

ABUTMENTS A&B-NORTH

Virginia Department of Highways
Office of the Bridge Engineer
Richmond, Virginia

DRAWN BY: NL
TRACED BY: JDE
CHECKED BY: LGL

March 1, 1967

Scale: ¾" = 1'-0"

CCIX-7
Sheet 4 of 18

0204-0-0-7

PUB. RD REGION	STATE	FEDERAL AID ROUTE	FEDERAL AID PROJECT	STATE ROUTE	STATE PROJECT	SHEET NO.	TOTAL SHEETS
2	VA.	—	—	24	0024-149-102, PE101, B601	11(5)	

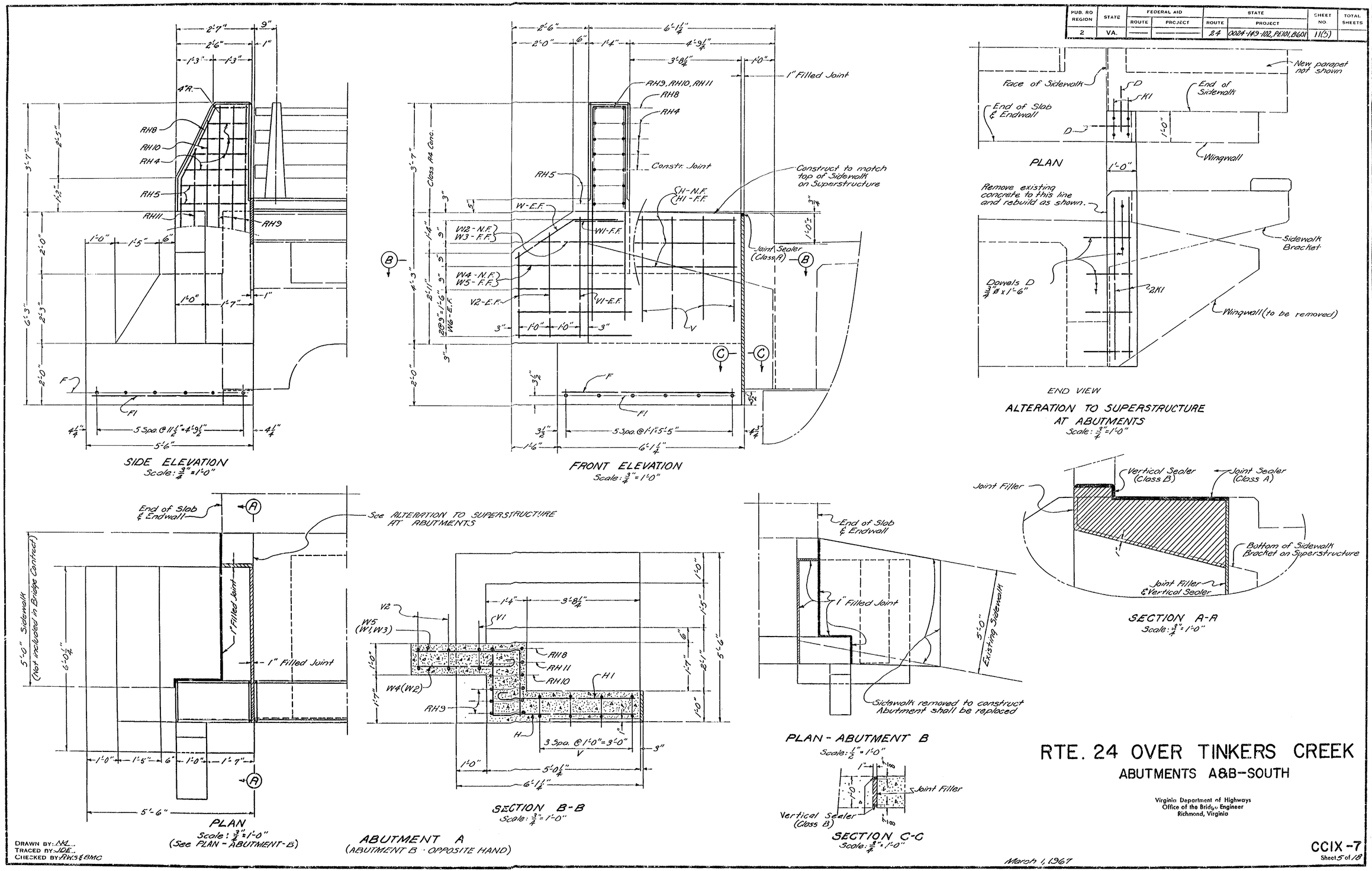

RTE. 24 OVER TINKERS CREEK

ABUTMENTS A&B-SOUTH

Virginia Department of Highways
Office of the Bridge Engineer
Richmond, Virginia

DRAWN BY: NL
TRACED BY: JDE
CHECKED BY: RWS & BMC

March 1, 1967

CCIX-7
Sheet 5 of 18

2 0 9 0 7 0 5

PUB. RD. REGION	STATE	FEDERAL AID ROUTE	FEDERAL AID PROJECT	STATE ROUTE	STATE PROJECT	SHEET NO.	TOTAL SHEETS
2	VA.			24	0024-149-102(PE101)B601	11 (6)	

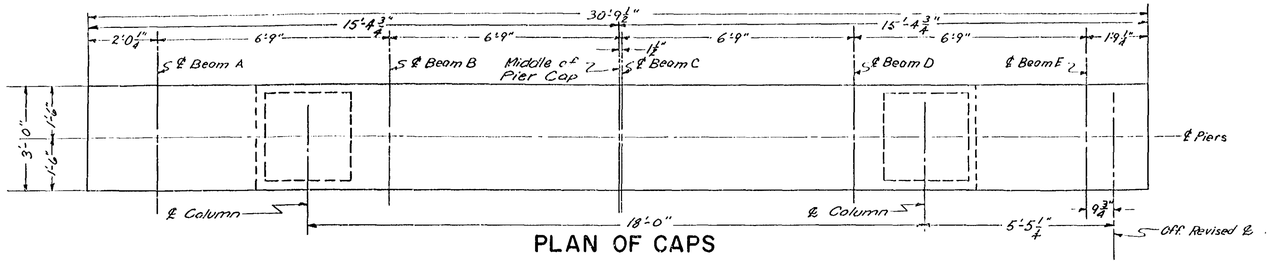

PLAN OF CAPS

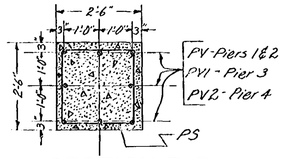

SECTION B-B

Avg. Depth Footings		a		Table of Pier Column Lengths & Stirrup Spacings		
A	B	A	B		a	b (PS Spacing)
3'-6¼"	3'-1¾"	8'-11¾"	12'-9¾"	Pier 1	~~14'-0"~~	13 Spa. @ 1'-0" = 13'-0"
3'-5½"	3'-3¼"	11'-7⅛"	13'-7"	Pier 2	~~14'-0"~~	13 Spa. @ 1'-0" = 13'-0"
3'-5½"	3'-5¾"	9'-8½"	11'-7½"	Pier 3	~~11'-0"~~	10 Spa. @ 1'-0" = 10'-0"
3'-5"	3'-5⅜"	12'-7⅛"	11'-10"	Pier 4	~~17'-0"~~	16 Spa. @ 1'-0" = 16'-0"

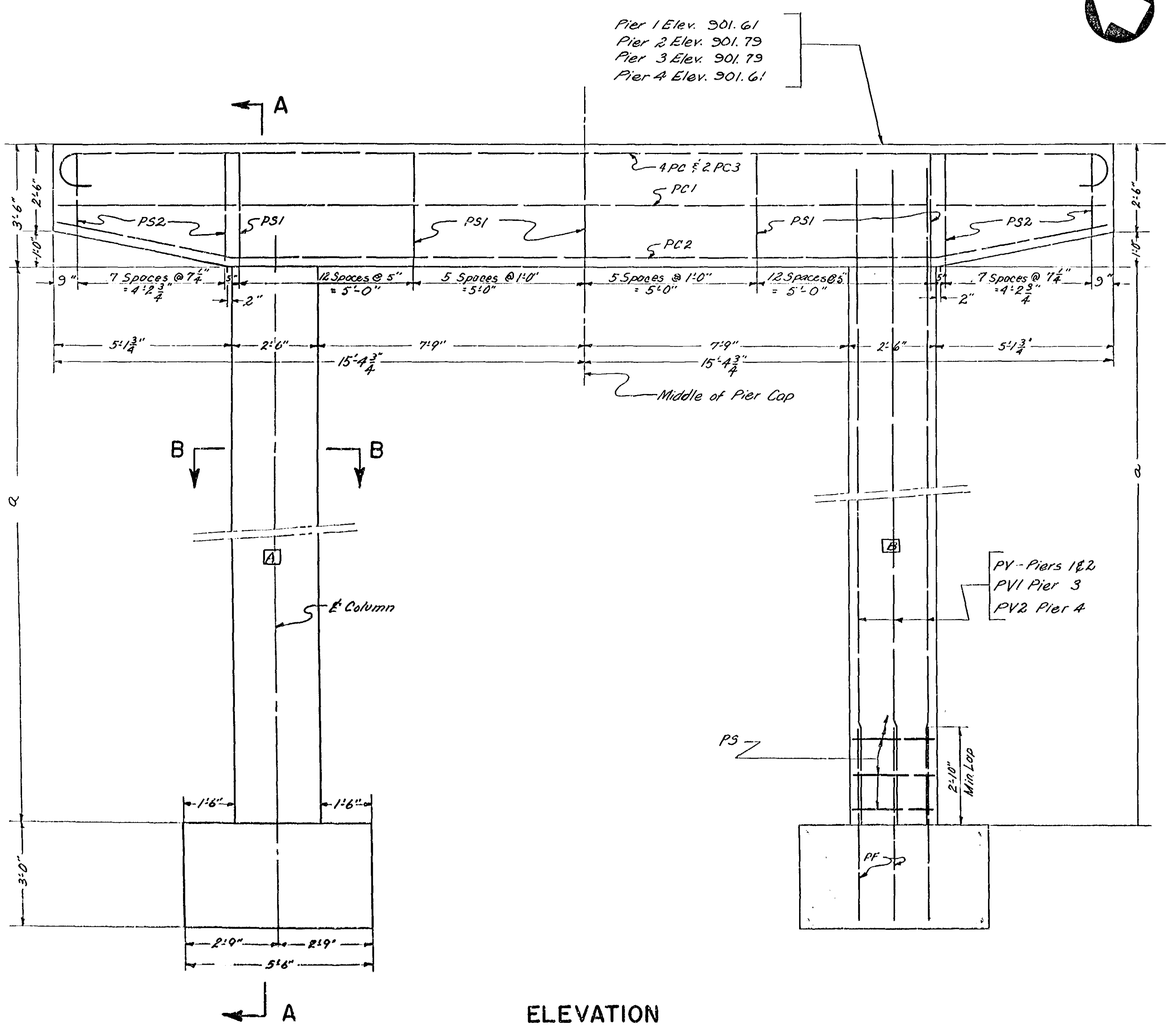

ELEVATION

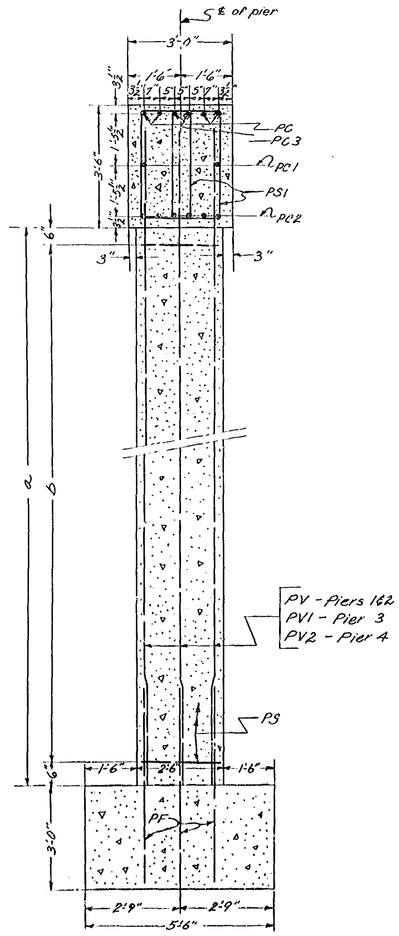

SECTION A-A

REINFORCING STEEL SCHEDULE					
Mark	No.	Size	Length	Pin	Location
PC	16	#11	33'-6"	11"Ø	Caps
PC1	8	#5	30'-5"	—	"
PC2	24	#10	30'-7"	10"Ø	"
PC3	8	#10	33'-2"	10"Ø	"
PF	64	#9	5'-8"	—	Footings
PS	112	#4	9'-6"	2"Ø	Columns
PS1	280	#4	10'-0"	2"Ø	Caps
PS2	128	#4	8'-3" to 9'-10"	2"Ø	"
PV	32	#9	17'-0"	—	Columns - Pier 1&2
PV1	16	#9	14'-0"	—	" " 3
PV2	16	#9	20'-0"	—	" " 4

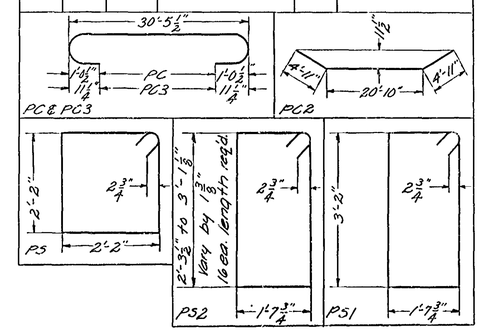

Note: Dimensions in bending diagram are out to out of bars.

RTE. 24 OVER TINKERS CREEK

PIERS 1,2,3 & 4

Virginia Department of Highways
Office of the Bridge Engineer
Richmond, Virginia

DRAWN BY: C.E.O. & B.M.C.
TRACED BY: T.L.E.
CHECKED BY: R.W.S.

March 1, 1967

Scale: ½" = 1'-0"

CCIX-7
Sheet 6 of 18

2 0 9 0 7 - 0 6

PUB. RD REGION	STATE	FEDERAL AID ROUTE	FEDERAL AID PROJECT	STATE ROUTE	STATE PROJECT	SHEET NO.	TOTAL SHEETS
2	VA.	—	—	24	0024-149-102, PE101, B601	11 (7)	

* Due to error in existing bridge width, Mr G. L. Robertson, Resident Engineer, authorized constructing new bridge as shown on plans and narrow down existing roadway from 25'-0" to 24'-2½"

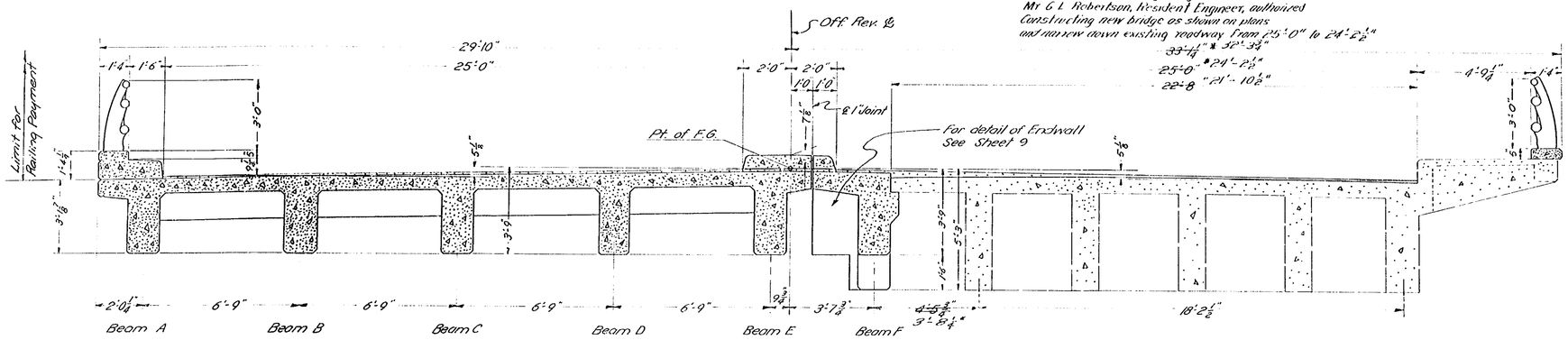

TRANSVERSE SECTION NEAR ABUTMENT B

Opposite Hand near Abutment A

Scale: ⅜" = 1'-0"

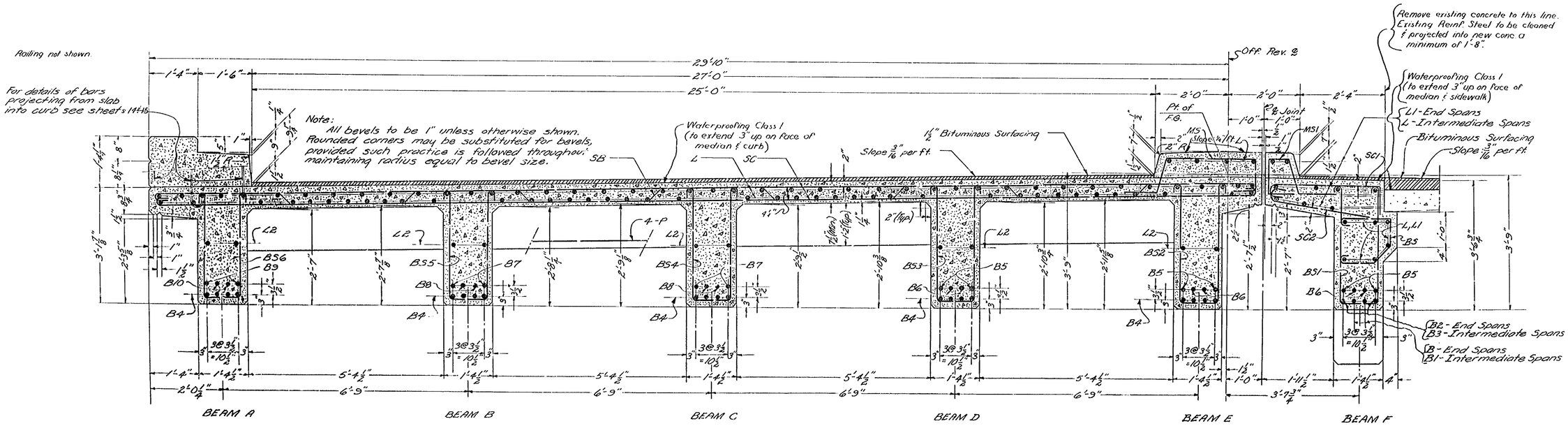

PART TRANSVERSE SECTION NEAR PIERS

Scale: ¾" = 1'-0"

RTE. 24 OVER TINKERS CREEK

SUPERSTRUCTURE

Virginia Department of Highways
Office of the Bridge Engineer
Richmond, Virginia

DRAWN BY: RBM & NKL
TRACED BY: WAR & JDE
CHECKED BY: RWS.

March 1, 1967

CCIX-7

Sheet 7 of 18

2 0 9 - 0 7 - 7 0 7

PUB. RD REGION	STATE	FEDERAL AID ROUTE	FEDERAL AID PROJECT	STATE ROUTE	STATE PROJECT	SHEET NO	TOTAL SHEETS
2	VA.	—	—	24	0024-149-102, PE101, B601	11-(8)	

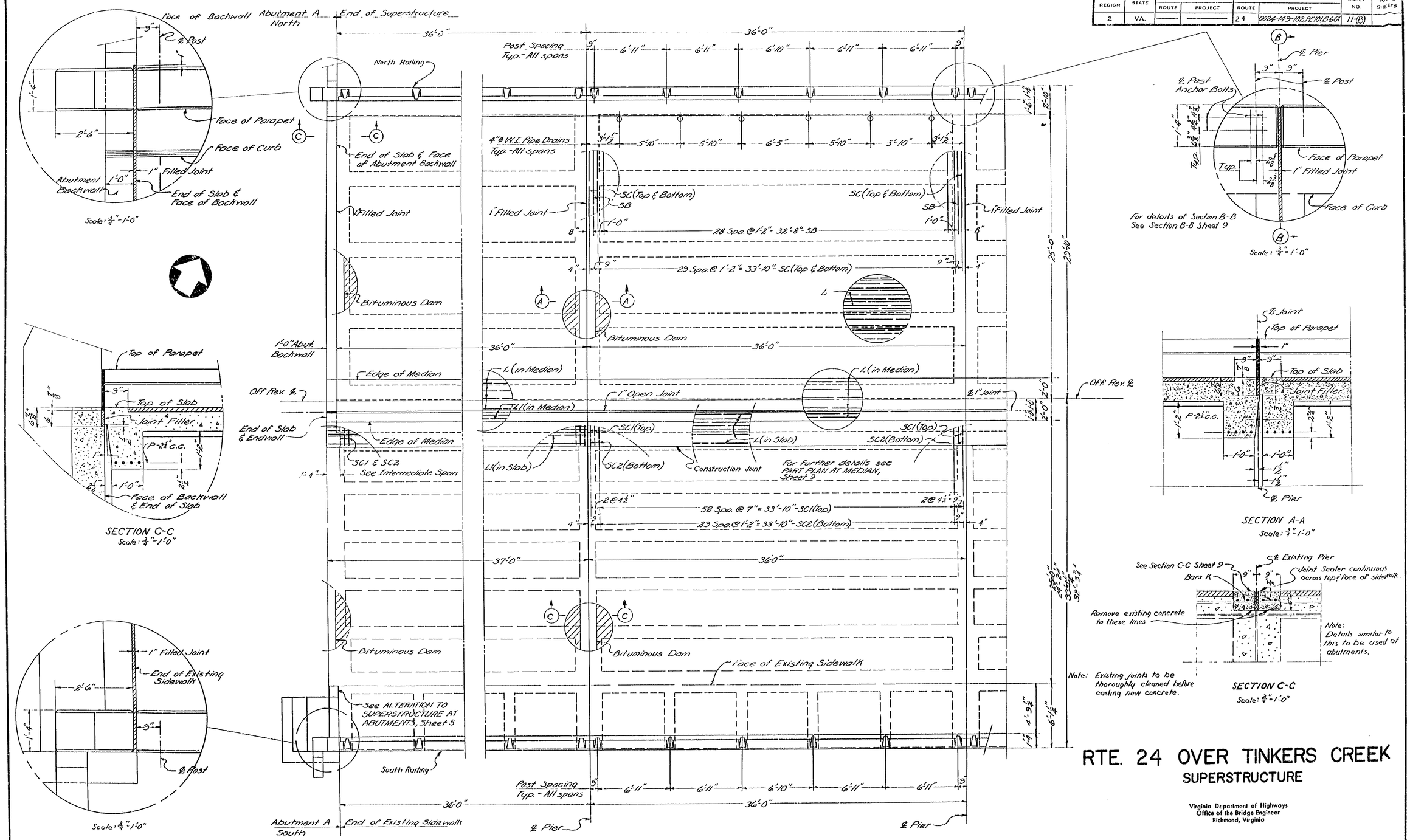

RTE. 24 OVER TINKERS CREEK
SUPERSTRUCTURE

Virginia Department of Highways
Office of the Bridge Engineer
Richmond, Virginia

DRAWN BY: NKL
TRACED BY: JDE
CHECKED BY: RWS

March 1, 1967

CCIX-7
Sheet 8 of 18

7-0-6-0-2

PUB. RD REGION	STATE	FEDERAL AID ROUTE	FEDERAL AID PROJECT	STATE ROUTE	STATE PROJECT	SHEET NO.	TOTAL SHEETS
2	VA.	——	——	24	0024-149-102, PE101, Bl.01	11(9)	

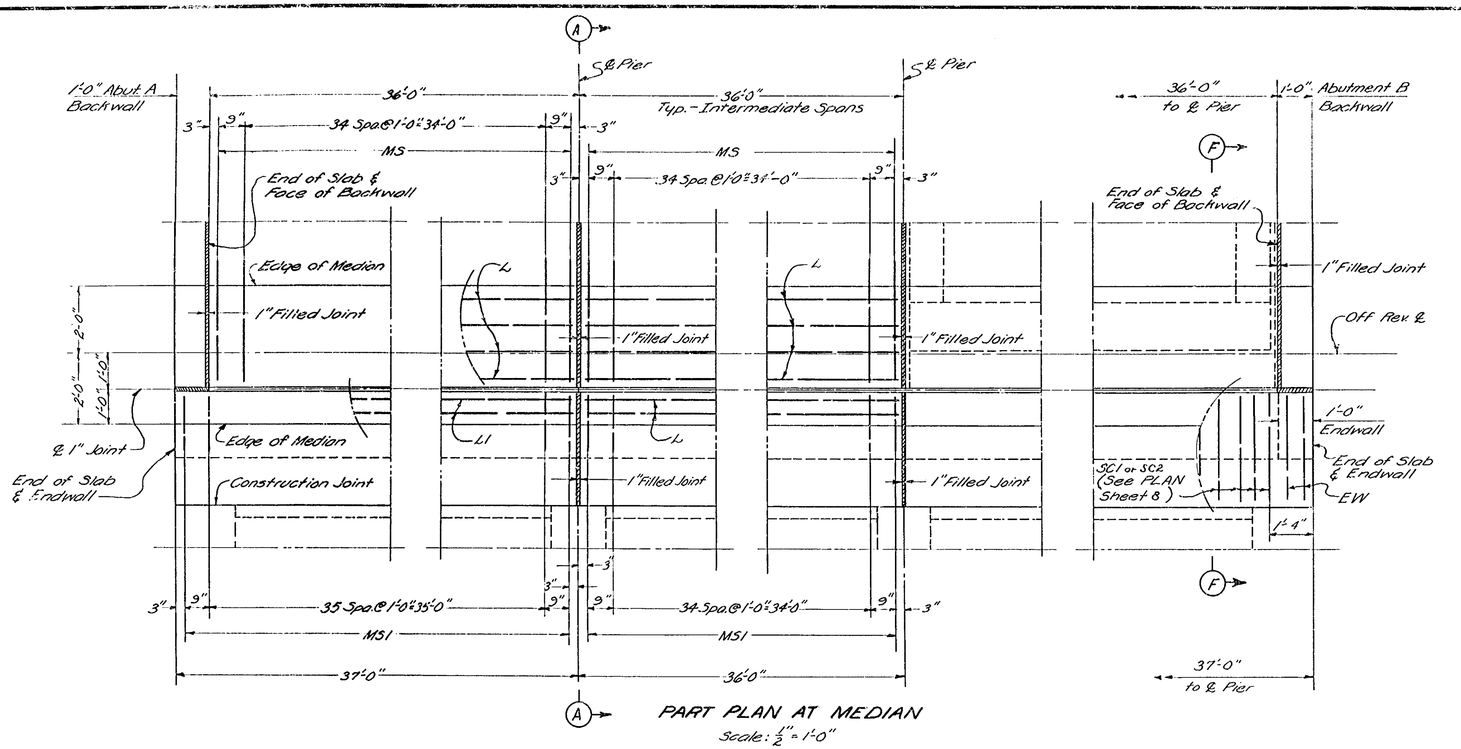

PART PLAN AT MEDIAN
Scale: 1/2" = 1'-0"

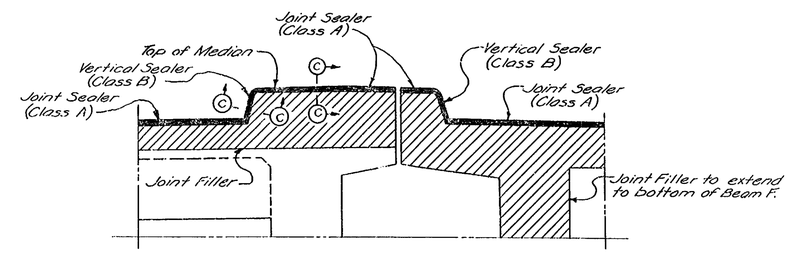

SECTION A-A
Scale 3/4" = 1'-0"

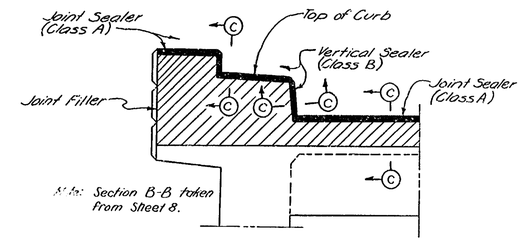

SECTION B-B
Scale: 3/4" = 1'-0"

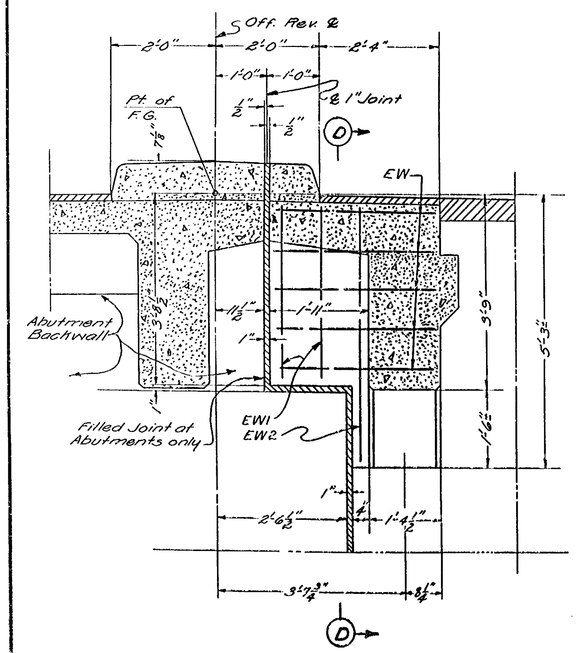

SECTION F-F
Scale: 3/4" = 1'-0"

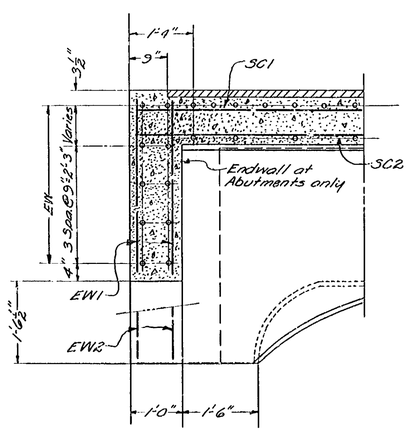

SECTION D-D
Scale: 3/4" = 1'-0"

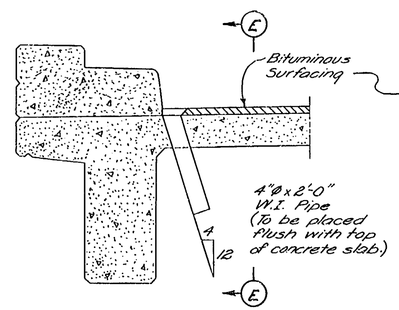

DRAIN DETAILS AT CURB
Scale: 3/4" = 1'-0"

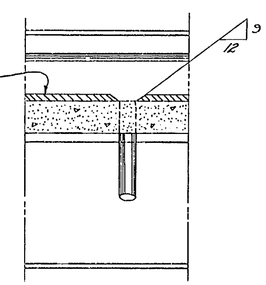

SECTION E-E
Scale: 3/4" = 1'-0"

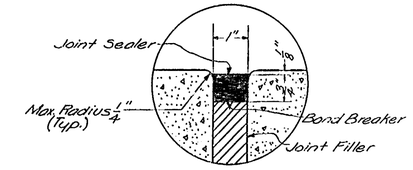

SECTION C-C
Scale: 6" = 1'-0"

JOINT NOTES:
Joints shall be free of cracked and spalled areas and their faces shall be free of all foreign matter, curing compound oils, greases, and dirt. All faces must be sandblasted or brushed with a mechanical rotary wire brush. Just prior to sealing, the joint shall be blown out with oil-free and water-free compressed air.
A two-part polyurethane sealant meeting the requirements of Sec. 213.03 may be used in lieu of the polysulfide-base type specified.

RTE. 24 OVER TINKERS CREEK
MISCELLANEOUS SUPERSTRUCTURE DETAILS

Virginia Department of Highways
Office of the Bridge Engineer
Richmond, Virginia

DRAWN BY: NKL
TRACED BY: JDE
CHECKED BY: RWS

March 1, 1967

CCIX-7
Sheet 9 of 18

7-0-6-0-2

PUB. RD REGION	STATE	FEDERAL AID ROUTE	FEDERAL AID PROJECT	STATE ROUTE	STATE PROJECT	SHEET NO.	TOTAL SHEETS
2	VA.			24	0024-149-102, 2C101, B601	11 (11)	

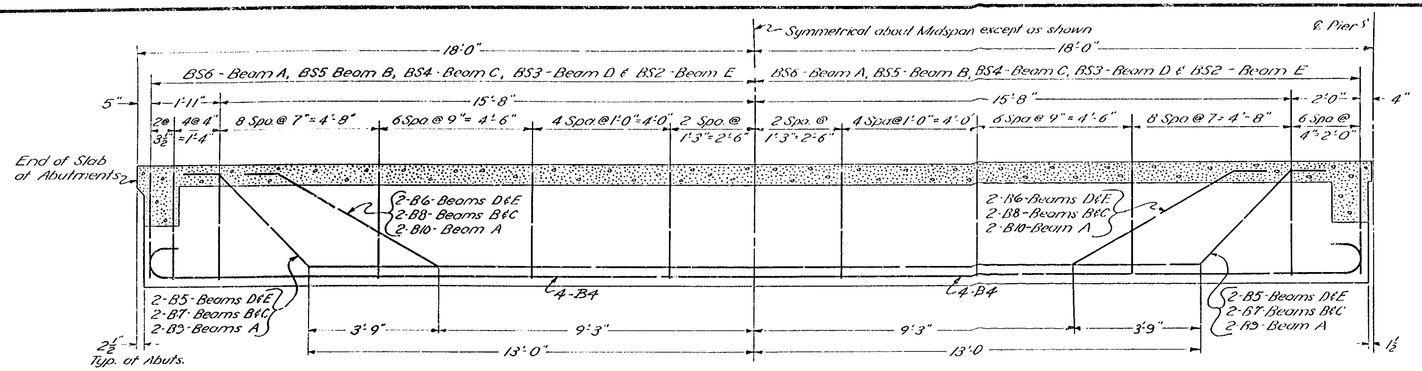

BEAMS A, B, C, D & E
Scale: ½" = 1'-0"

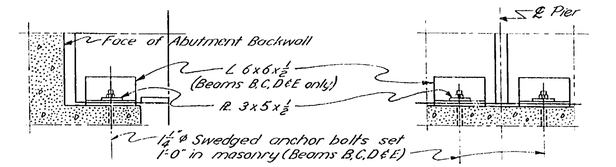

PART SECTION NORMAL TO ABUTMENTS
ABUTMENT BEARINGS

PART SECTION NORMAL TO PIERS
PIER BEARINGS

Scale: ¾" = 1'-0"

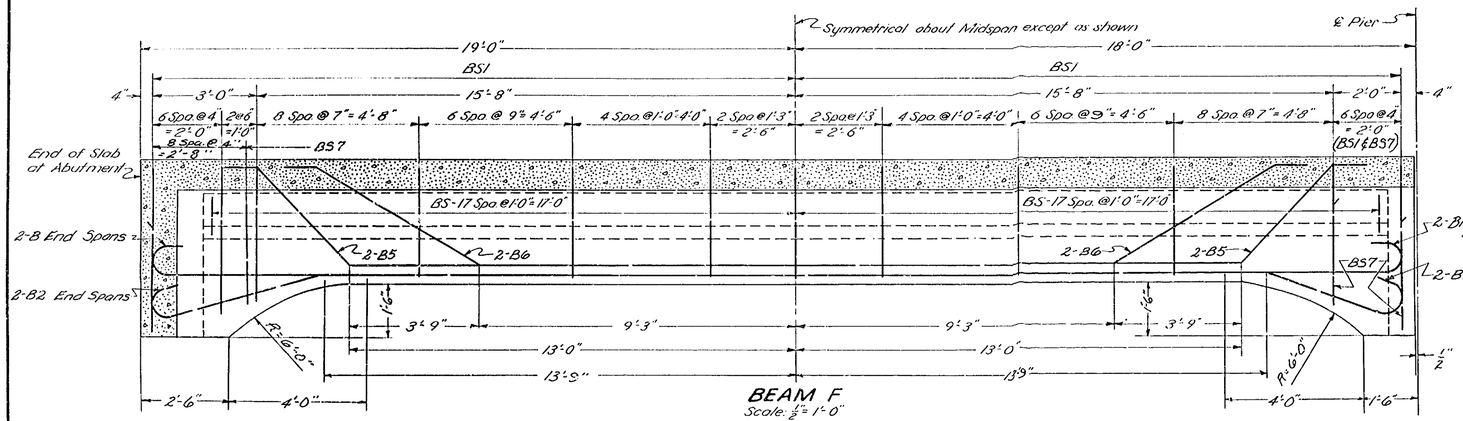

BEAM F
Scale: ½" = 1'-0"

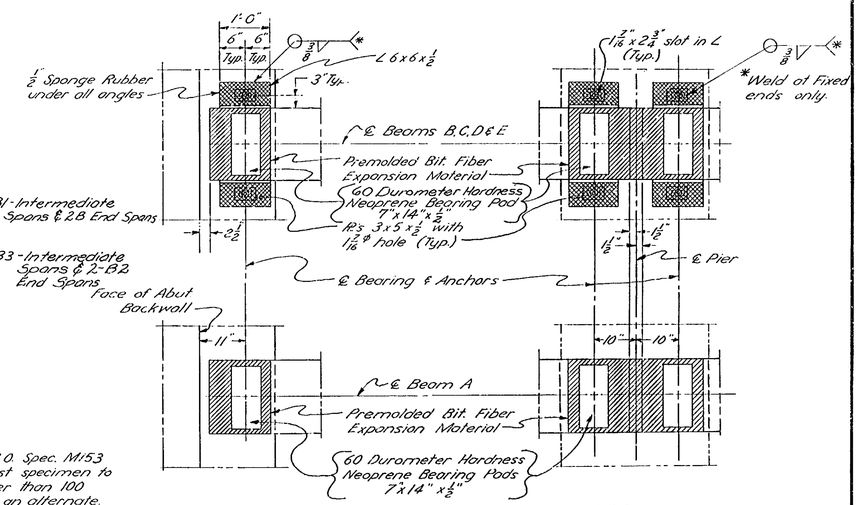

SECTION SHOWING BEARING PADS
Scale: ¾" = 1'-0"

BEARING DETAILS FOR BEAMS A, B, C, D & E

Note:
½" Sponge Rubber shall meet the requirements of A.A.S.H.O. Spec. M153-54 Type I, except that the load required to compress a test specimen to 50 per cent of its thickness before test shall not be greater than 100 pounds per square inch. Expanded Rubber may be used as an alternate.

6x6x½ Angles shall be attached, after full dead load is carried by the member, with approved epoxy adhesive which shall have a minimum adhesive and shear strength equal to the tensile strength of the concrete.

At expansion ends a heavy coat of asphalt paint shall be applied to the top of the ½" Premolded Bituminous Fiber Expansion Material. Proper care shall be taken to maintain the Neoprene Bearing Pads free of any asphalt paint.

Sponge rubber pads shall be compressed to 90% of their original thickness at the time angles are attached to beams.

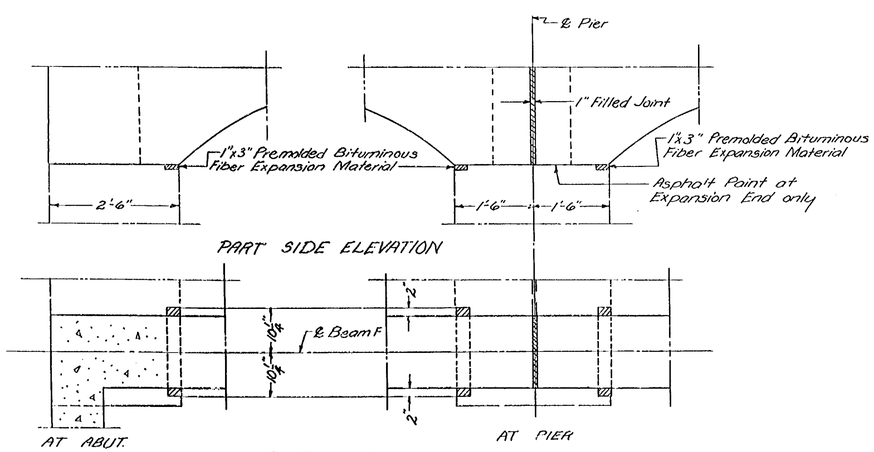

BRIDGE SEAT DETAILS FOR BEAM F
Scale: ¾" = 1'-0"

RTE 24 OVER TINKERS CREEK
BEARINGS AND BEAMS

Virginia Department of Highways
Office of the Bridge Engineer
Richmond, Virginia

DRAWN BY: R.B.M.
TRACED BY: W.A.A.
CHECKED BY: R.W.S. & A.M.

March 1, 1967

CCIX-7
Sheet 10 of 18

0-6-0 7 2

PUB. RD REGION	STATE	FEDERAL AID ROUTE	FEDERAL AID PROJECT	STATE ROUTE	STATE PROJECT	SHEET NO.	TOTAL SHEETS
2	VA.	—	—	24	002K-149-102, PE101, B601	11 (11)	

ABUTMENTS A & B - NORTH

Mark	No.	Size	Length	Pin	Location
AB	4	#10	35'-6"	—	Cap & Wingwall
AB1	8	#10	32'-6"	—	Cap
AW	4	#10	31'-0"	—	Backwall
AW1	4	#10	6'-9"	10"Ø	Backwall
AB2	6	#9	32'-6"	—	Cap
AB3	4	#9	36'-9"	9"Ø	Cap & Wingwall
AC	24	#8	7'-0"	8"Ø	Footing & Stem
AC1	24	#8	13'-0"	—	Stem
AP	8	#8	6'-0"	—	Post
AP1	8	#8	8'-0"	8"Ø	Post
AP2	8	#6	5'-3"	$4\frac{1}{2}$"Ø	Post
AH	32	#6	35'-6"	—	Wall
AV	58	#4	5'-9"	—	Wall & Cap - Abut. A
AV1	4		4'-2"	—	Wall - Abut. A
AV2	4		8'-9"	2"Ø	Wall - Abut. A
AV3	58		4'-9"	—	Wall & Cap - Abut. B
AV4	4		3'-2"	—	Wall - Abut. B
AV5	4		7'-9"	2"Ø	Wall - Abut. B
AV6	64		6'-0"	2"Ø	Cap & Backwall
AV7	52		6'-9"	2"Ø	Backwall
AV8	4		8'-3"	2"Ø	Backwall
AV9	8		8'-9"	2"Ø	Backwall
AV10	16	#4	5'-0" to 6'-$7\frac{1}{2}$"	—	Wingwall
AP3	8	#4	4'-6"	—	Post
AP4	12	#4	7'-11"	2"Ø	Post
AP5	4	#4	7'-0"	2"Ø	Post
AP6	4	#4	4'-2"	2"Ø	Post & Backwall
AH1	4	#4	32'-6"	—	Cap
AH2	16		30'-9"	—	Backwall
AH3	20		4'-3"	—	Cap & Wingwall
AH4	4		3'-6"	—	Wingwall
AH5	4	#4	2'-6"	—	Wingwall
AS	188	#4	10'-1"	2"Ø	Cap
AM	4	#4	5'-0"	2"Ø	Backwall
RH	4	#4	6'-11"	2"Ø	Post
RH1	6		12'-3"	2"Ø	Post
RH2	2		10'-9"	2"Ø	Post
RH3	2		9'-3"	2"Ø	Post
RH4	16		1'-4" to 2'-1"	—	Post
RH5	16	#4	2'-3"	—	Post

ABUTMENTS A & B - SOUTH

Mark	No.	Size	Length	Pin	Location
F	12	#8	5'-6"	—	Footing
F1	12	#8	5'-0"	—	Footing
V	8	#4	7'-0"	2"Ø	Backwall
V1	4	#4	3'-11"	—	Wingwall
V2	8	#4	2'-8" & 3'-4"	—	Wingwall
H	6	#4	6'-9"	2"Ø	Backwall
H1	6	#4	5'-11"	2"Ø	Backwall
W	4	#4	3'-9"	2"Ø	Wingwall
W1	2		3'-9"	2"Ø	
W2	2		3'-2"	2"Ø	
W3	2		4'-11"	2"Ø	
W4	2		3'-8"	2"Ø	
W5	2		5'-6"	2"Ø	
W6	12	#4	3'-9"	—	Wingwall
RH4	16	#4	1'-4" to 2'-1"	—	Post
RH5	8	#4	2'-3"	—	Post
RH8	4	#4	8'-2"	2"Ø	Post
RH9	6		14'-9"	2"Ø	Post
RH10	2		13'-3"	2"Ø	Post
RH11	2	#4	11'-9"	2"Ø	Post

Bending Diagram

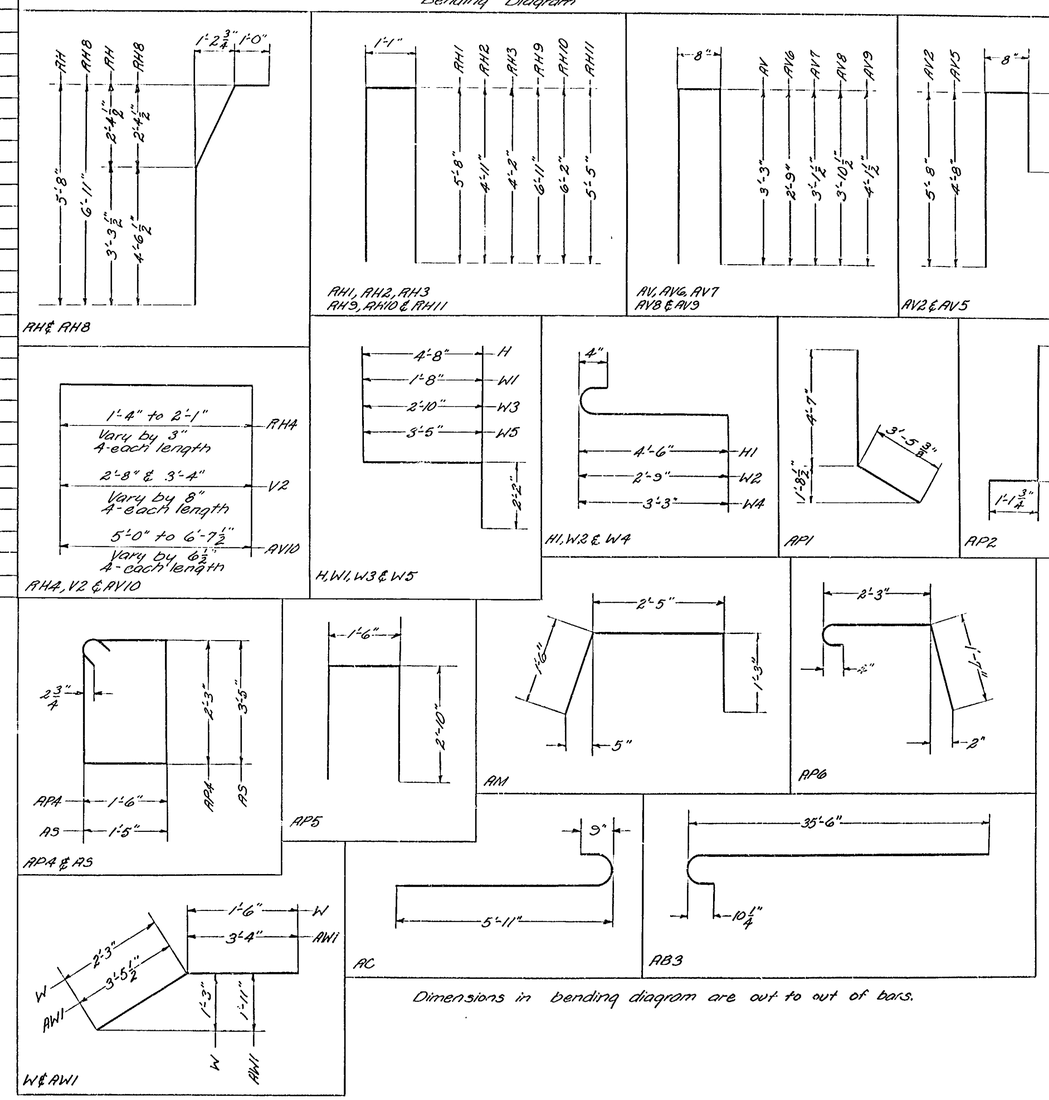

Dimensions in bending diagram are out to out of bars.

RTE. 24 OVER TINKERS CREEK

REINFORCING STEEL SCHEDULE FOR ABUTMENTS

Virginia Department of Highways
Office of the Bridge Engineer
Richmond, Virginia

DRAWN BY: N.R.
TRACED BY: J.D.E.
CHECKED BY: L.G.L.

March 6, 1967

CCIX-7
Sheet 11 of 18

0-6 0 7 2

PUB. RD REGION	STATE	FEDERAL AID ROUTE	FEDERAL AID PROJECT	STATE ROUTE	STATE PROJECT	SHEET NO.	TOTAL SHEETS
2	VA.	—	—	24	0024-149-102,PE101,B601	11(12)	

Mark	No.	Size	Length	Pin	Location
B	4	#10	39'-3"	10"Ø	Beam F - End Spans
B1	6	#10	38'-3"	10"Ø	Beam F - Intermediate Spans
B2	4	#10	39'-3"	10"Ø	Beam F - End Spans
B3	6	#10	38'-3"	10"Ø	Beam F - Intermediate Spans
B4	100	#10	38'-0"	10"Ø	Beams A,B,C,D & E - All Spans
B5	30	#9	35'-6"	9"Ø	Beams D,E & F - All Spans
B6	30	#9	31'-3"	9"Ø	" " " " "
B7	20	#9	35'-0"	9"Ø	Beams B & C - All Spans
B8	20	#9	30'-6"	9"Ø	" " " " "
B9	10	#9	34'-7"	9"Ø	Beam A - All Spans
B10	10	#9	30'-0"	9"Ø	" " " "
SB	155	#5	32'-9"	3¾"Ø	Slab - Upstream Side
SC	320	#5	31'-8"	3¾"Ø	" " "
SC1	315	#5	4'-3"	3¾"Ø	Slab - Downstream Side
SC2	160	#5	3'-9"	3¾"Ø	" " "
BS	175	#4	4'-5"	2"Ø	Beam F - All Spans
BS1	275	#4	8'-5"	2"Ø	" " " "
BS2	265	#4	8'-5"	2"Ø	Beam E - All Spans
BS3	265	#4	8'-3"	2"Ø	Beam D - " "
BS4	265	#4	8'-0"	2"Ø	Beam C - " "
BS5	265	#4	7'-10"	2"Ø	Beam B - " "
BS6	265	#4	7'-7"	2"Ø	Beam A - " "
BS7	74	#4	7'-0"	2"Ø	Beam F - " "
L	480	#4	35'-7"	—	Slab, Median & Beam Intermed. Spans
L1	30	#4	36'-7"	—	Slab, Median, Beam F - End Spans
L2	50	#4	35'-4"	—	Beams A,B,C,D & E - All Spans
MS	185	#4	5'-11"		Median - Upstream Side
MS1	187	#4	3'-11"		Median - Downstream Side
P	40	#4	28'-0"	—	End Bolsters - Upstream Side
K	20	#4	22'-4"	—	Bituminous Dam - Downstream Side
K1	8	#4	5'-3"	—	Endwall at Abuts. - Downstream Side
EW	16	#4	2'-11"	—	Endwalls
EW1	8	#4	3'-2"	—	"
EW2	4	#4	4'-7"	—	"

Bending Diagram

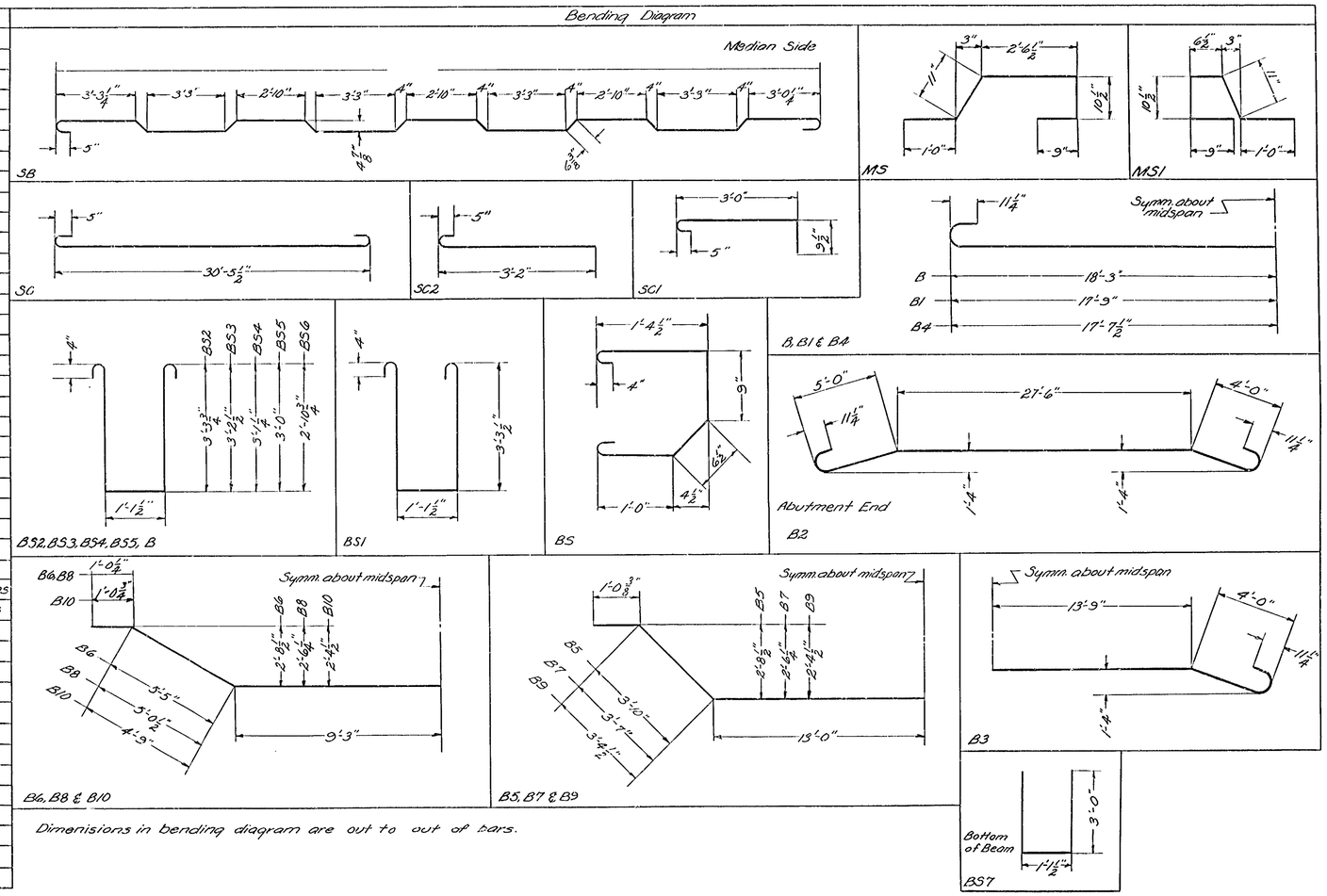

Dimenisions in bending diagram are out to out of bars.

RTE. 24 OVER TINKERS CREEK
REINFORCING STEEL SCHEDULE
SUPERSTRUCTURE

Virginia Department of Highways
Office of the Bridge Engineer
Richmond, Virginia

DRAWN BY: NKL
TRACED BY: JDE
CHECKED BY: RWS

March 1, 1967

CCIX-7
Sheet 12 of 18

2 0 9 0 7 1 2

PUB. RD REGION	STATE	FEDERAL AID ROUTE	FEDERAL AID PROJECT	STATE ROUTE	STATE PROJECT	SHEET NO.	TOTAL SHEETS
2	VA.	—	—	24	0024-149-102, P101, B601	11 (13)	

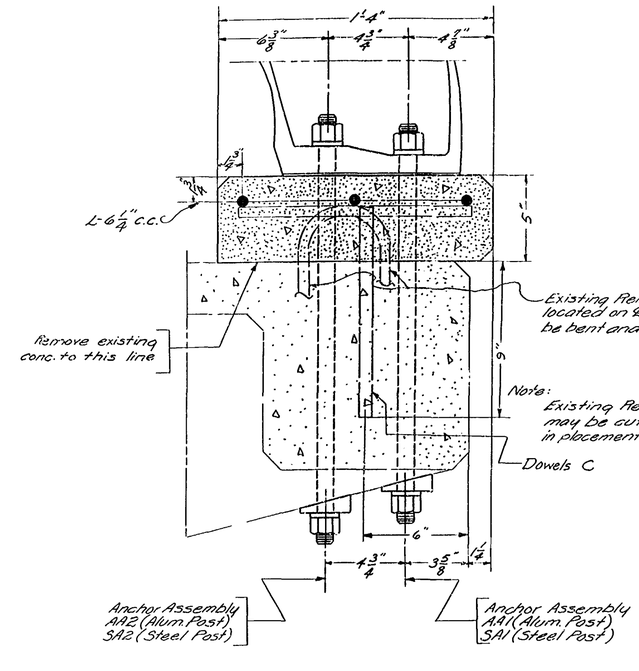

SECTION A-A
(Existing Exterior Reinforcing Steel not shown)
Scale: 3" = 1'-0"

Note: Rods AA1 & AA2 or SA1 & SA2 shall be placed by drilling 1 1/8" ø holes in existing conc.

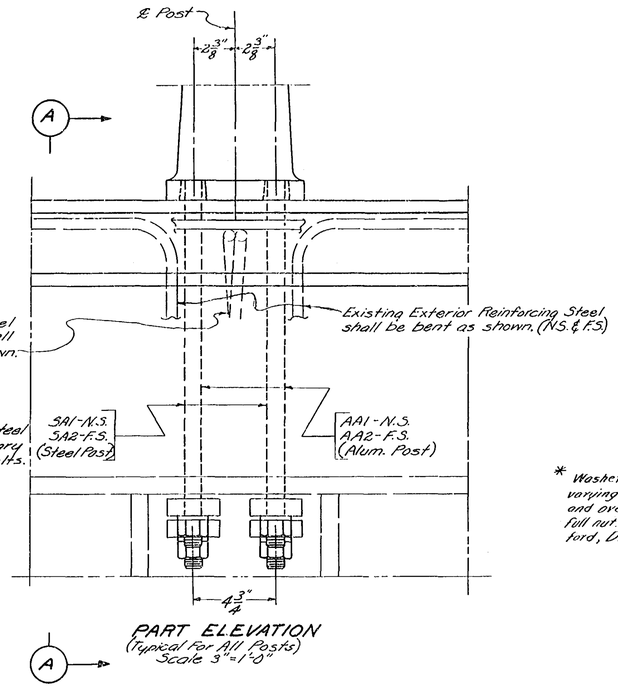

PART ELEVATION
(Typical For All Posts)
Scale 3" = 1'-0"

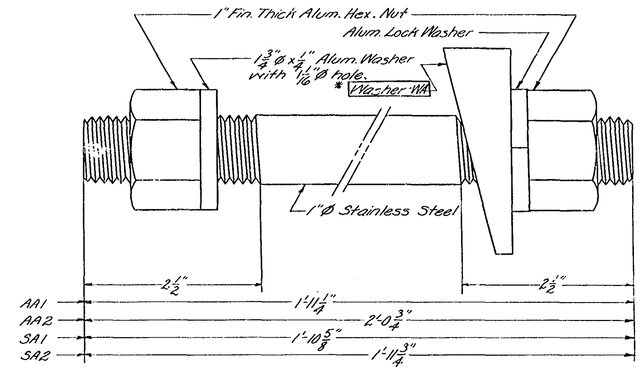

ANCHOR ASSEMBLY
(AA1, AA2, SA1 & SA2)
Full Scale

* Washer-WA was eliminated due to varying thickness of existing sidewalk and overhang in order to obtain a full nut. Authorized by Mr. D.V. Crawford, Dist. Bridge Engineer.

Note: The material for this rod shall conform to that required for rod C shown on sheet 16. These nuts shall meet requirements in ASTM B211 & the washers shall meet requirements in ASTM B209, Alloy Alclad 2024-T3.

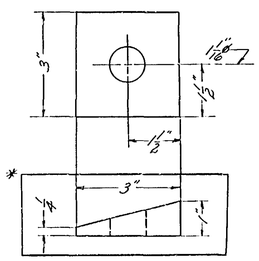

WASHER-WA
(120 Required)
Scale: 6" = 1'-0"

Note: For Post and Rail details not shown see sheets 14, 15 & 16.

Note: Reinforcing Steel for this railing included in Steel Schedule for North Railing. See sheets 14 or 15.

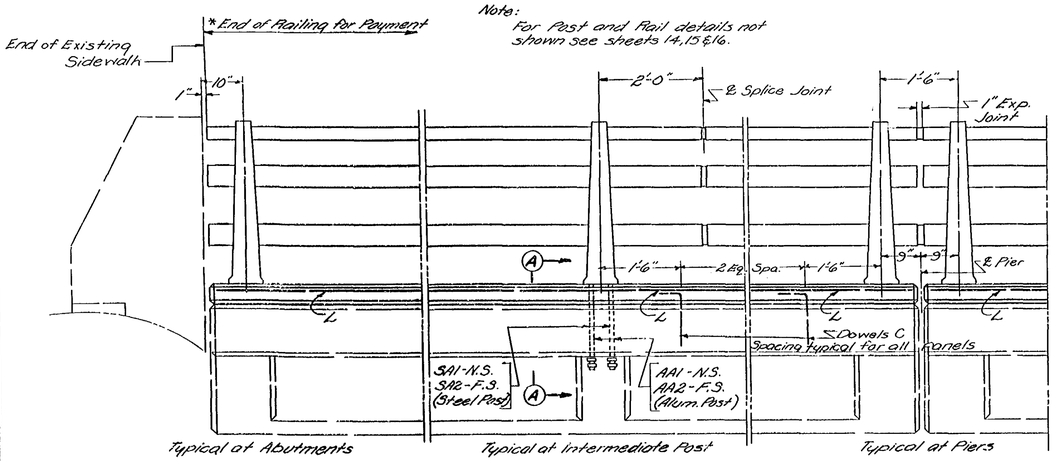

* Railing Concrete End Post shall be included in Abutments. For details see sheet 5

ELEVATION
Scale: 3/4" = 1'-0"

Note: For Post and Rail details not shown see sheets 14, 15 & 16.

RTE. 24 OVER TINKERS CREEK
SOUTH RAILING

Virginia Department of Highways
Office of the Bridge Engineer
Richmond, Virginia

DRAWN BY: W.A.R.
TRACED BY: J.D.E.
CHECKED BY: R.W.S

March 1, 1967

CCIX-7
Sheet 13 of 13

1 3

7 0-6 0 2

PUB RD REGION	STAT	FEDERAL AID ROUTE	FEDERAL AID PROJECT	STATE ROUTE	STATE PROJECT	SHEET NO.	TOTAL SHEETS
2	VA.	—	—	24	0024-149-102,PE101,B601	11(14)	

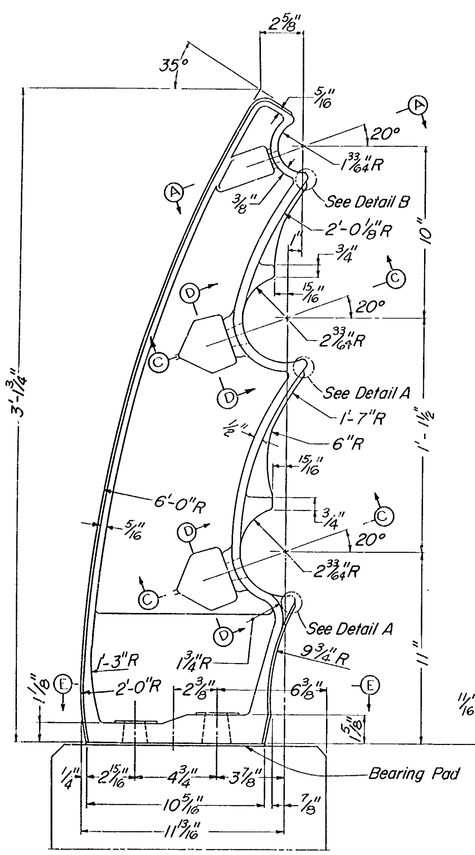

SIDE ELEVATION
Scale: 3"=1'-0"

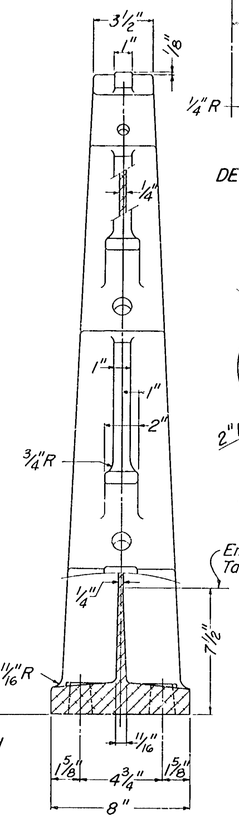

FRONT ELEVATION
Scale: 3"=1'-0"

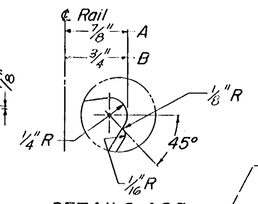

DETAILS A&B
Full Scale

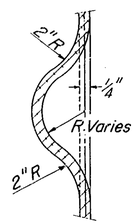

SECTION D-D

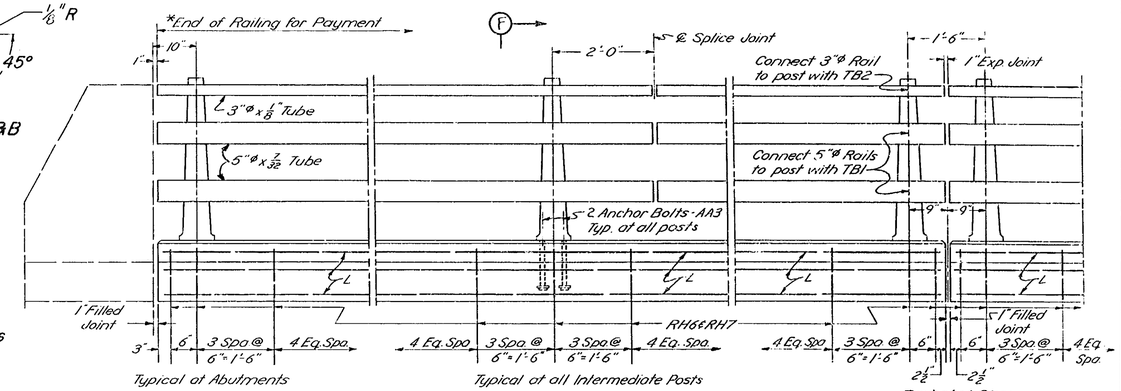

*Railing Concrete End Post shall be included in Abutments. For details see sheets 2,3,4 & 5.

ELEVATION
Scale: 3/4"=1'-0"

Fabricators Note: Rails to be continuous over a minimum of 3 posts before splicing.

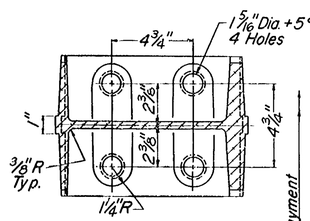

SECTION E-E
Scale: 3"=1'-0"

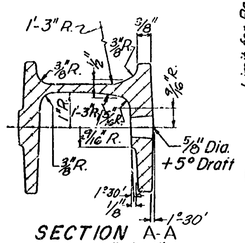

SECTION A-A
Scale: 6"=1'-0"

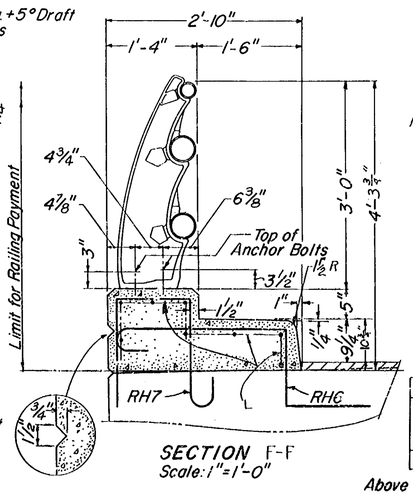

SECTION F-F
Scale: 1"=1'-0"

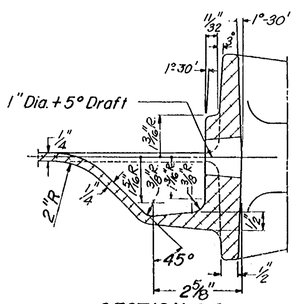

SECTION C-C
Scale: 6"=1'-0"

ESTIMATED QUANTITIES	
Concrete C.Y.	Reinforcing Steel Lbs.
24.0	4100

Above items are included in bid price for railing.
Above items include South Railing

REINFORCING STEEL SCHEDULE

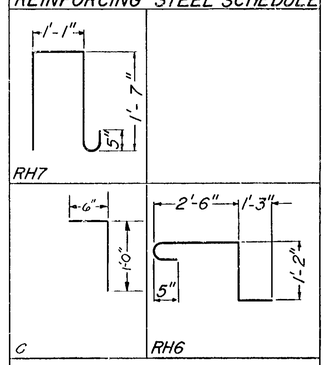

Dimensions in bending diagram are out to out of bars.

Mark	No	Size	Length	Pin	Location
RH6	265	#5	5'-3"	3 3/4"	Curb
RH7	265	#5	4'-7"	3 3/4"	"
L	55	#4	35'-7"	—	"
C	75	#4	1'-5"	2"ø	"

Note: Reinforcing Steel for South Railing included in this table.

NOTES:

Posts shall be seated on neoprene bearing pads 1/16" minimum thickness, having a nominal durometer hardness of 70. Pads shall conform to post base dimensions.

Aluminum shims may be used for adjusting post alignment, maximum thickness of shim build-up not to exceed 1/8". Where more tilting of the post is required, the concrete area shall be ground down. Shims to be Type 2.

Posts shall be cast aluminum.

Rail members shall be aluminum extruded tube.

For details of rail, splices, toggle bolts, shims and anchorage see sheet 16.

All bevels for concrete on this sheet to be 3/4".

Anchor bolts may be set normal to profile grade.

All of the indicated construction joints are permissible, selected to facilitate construction, and may be omitted at the contractor's option.

RTE. 24 OVER TINKERS CREEK
NORTH ALUMINUM RAILING

Virginia Department of Highways
Office of the Bridge Engineer
Richmond, Virginia

DRAWN BY: P.A.C. Jr.
TRACED BY: A.E.G.
CHECKED BY: SHB

March 1, 1967

CCIX-7

Sheet 14 of 18

2 0 9 0 7 1 4

PUB. RD. REGION	STATE	FEDERAL AID ROUTE	FEDERAL AID PROJECT	STATE ROUTE	STATE PROJECT	SHEET NO.	TOTAL SHEETS
2	VA.			24	0024-149-102, PE101, B601	11 (15)	

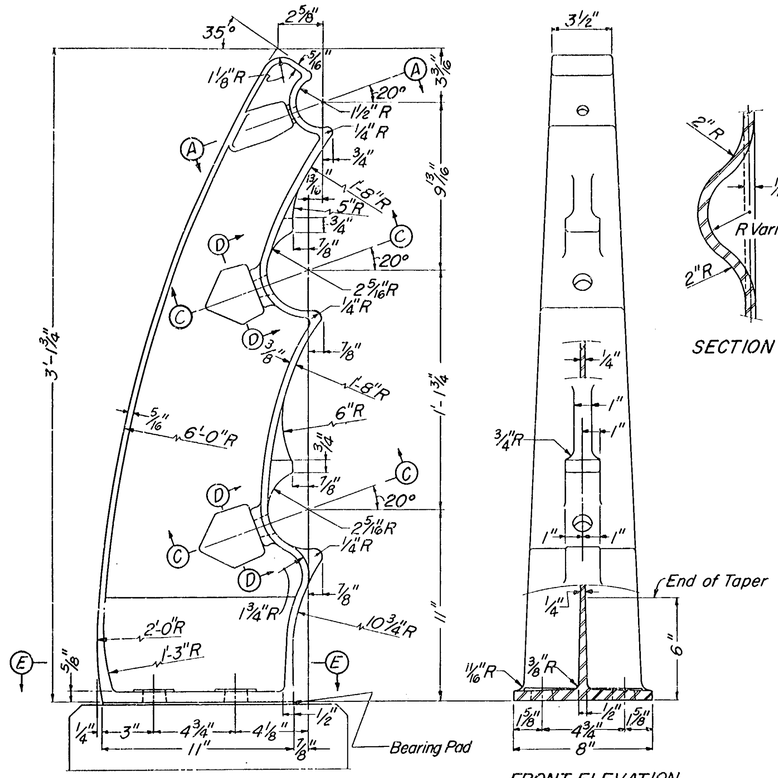

SIDE ELEVATION
Scale: 3" = 1'-0"

FRONT ELEVATION
Scale: 3" = 1'-0"

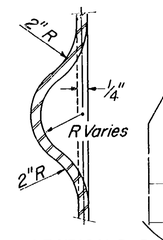

SECTION D-D

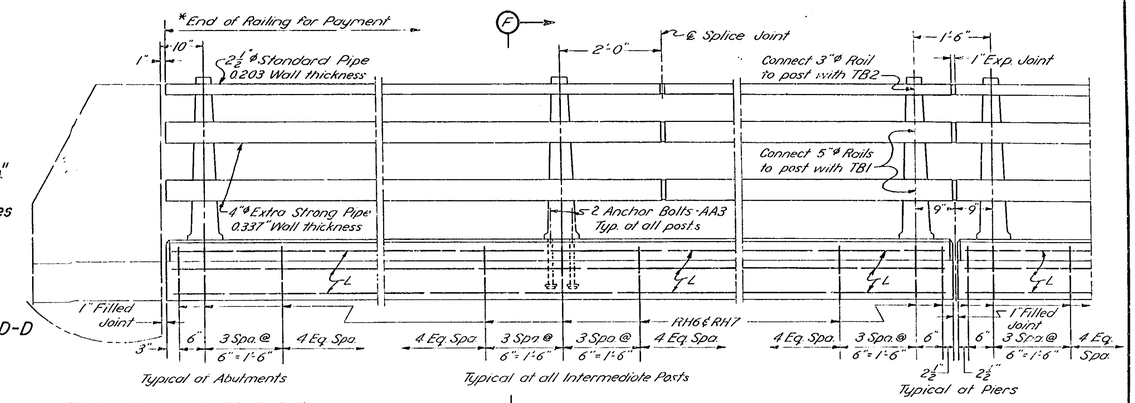

*Railing Concrete End Posts shall be included in Abutments. For details see sheets 2, 3, 4 & 5.

ELEVATION
Scale: 3/4" = 1'-0"

Fabricators Note: Rails to be continuous over a minimum of 3 posts before splicing.

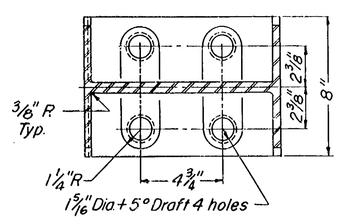

SECTION E-E
Scale: 3" = 1'-0"

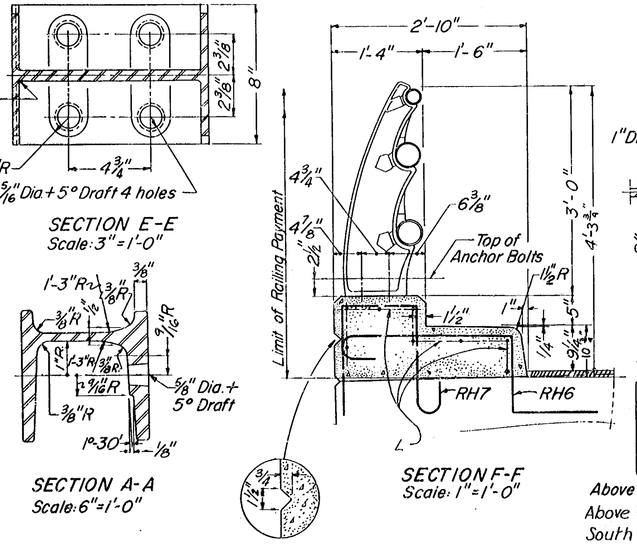

SECTION F-F
Scale: 1" = 1'-0"

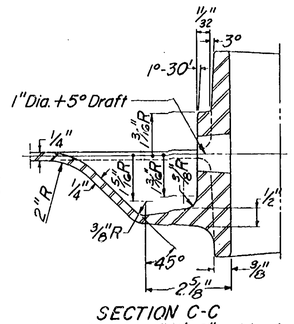

SECTION C-C
Scale: 6" = 1'-0"

SECTION A-A
Scale: 6" = 1'-0"

ESTIMATED QUANTITIES	
Concrete C.Y.	Reinforcing Steel Lbs.
21.0	1100

Above items are included in bid price for railing.
Above items include quantities for South Railing

REINFORCING STEEL SCHEDULE

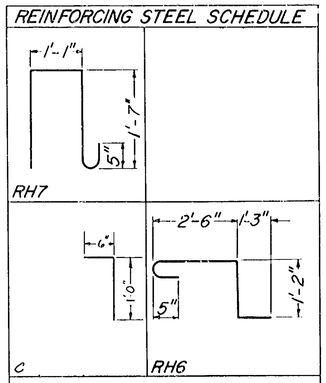

Dimensions in bending diagram are out to out of bars.

Mark	No.	Size	Length	Pin	Location
RH6	265	#5	5'-3"	3 3/4"	Curb
RH7	265	#5	4'-7"	3 3/4"	"
L	55	#4	35'-7"	—	"
C	75	#4	1'-5"	2" ø	"

Note: Reinforcing Steel for South Railing included in this table.

NOTES:

Posts shall be seated on neoprene bearing pads 1/16" minimum thickness, having a nominal durometer hardness of 70. Pads shall conform to post base dimensions.

Steel shims may be used for adjusting post alignment, maximum thickness of shim build-up not to exceed 1/8". Where more tilting of the post is required, the concrete area shall be ground down. Shims to be Type 2.

Posts shall be malleable iron or carbon steel casting and shall be galvanized.

Rails shall conform to the Specifications for Welded Seamless Steel Pipe, ASTM A-53, Type E or S, Grade B and shall be galvanized.

For details of rail, splices, toggle bolts, shims and anchorage see sheet 16.

All bevels for concrete on this sheet to be 3/4".

Anchor bolts may be set normal to profile grade.

All of the indicated construction joints are permissible, selected to facilitate construction, and may be omitted at the contractor's option.

RTE. 24 OVER TINKERS CREEK
NORTH STEEL RAILING

Virginia Department of Highways
Office of the Bridge Engineer
Richmond, Virginia

DRAWN BY: P.A.C. Jr.
TRACED BY: A.F.B.
CHECKED BY: S.H.B.

March 1, 1967

CCIX-7
Sheet 15 of 18

1-70-60-2

PUB. RD. REGION	STATE	FEDERAL AID ROUTE	FEDERAL AID PROJECT	STATE ROUTE	STATE PROJECT	SHEET NO.	TOTAL SHEETS
2	VA.	—	—	24	0024-149-102, PE101, B601	11 (16)	

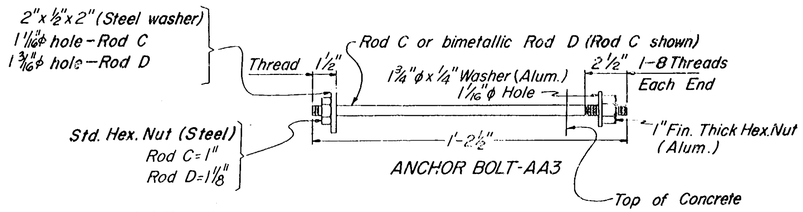

ANCHOR BOLT-AA3

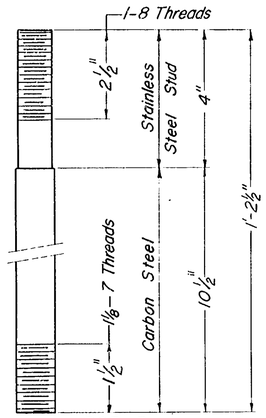

ROD D
Scale: 6" = 1'-0"

ANCHOR BOLT NOTES:

Material for Rod C shall conform to ASTM A-276, Type 430 stainless steel except with a minimum of 100,000 psi ultimate strength and a minimum elongation of 15%.

Material for bimetallic Rod D shall conform to the following specifications:

Carbon steel - AASHO Spec. M169 (ASTM A108) Grade 1020

Stainless steel - ASTM A276, Type 304, annealed.

AA3:
Nuts (Top) - ASTM B211
Top Washers - ASTM B209, Alloy ALCLAD 2024-T3
Rods - See Anchor Bolt Notes
Nuts (Bottom) - ASTM A307

Threads on all rods may be rolled or cut.

Required minimum tensile strength for:

Complete Rod D = 60,000 lbs.

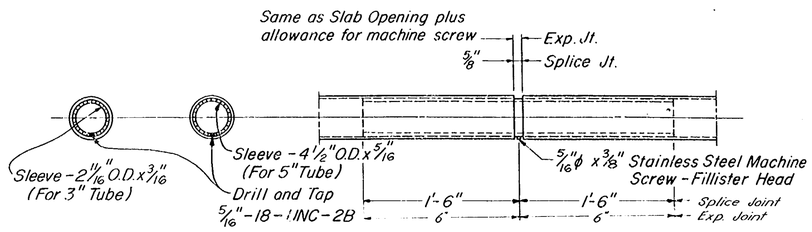

SPLICE & EXP. JOINT - ALUMINUM RAILS

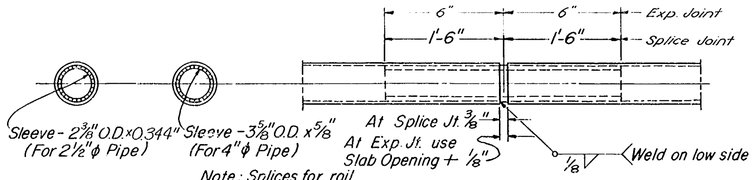

Note: Splices for rail
(1) Cold drawn seamless mechanical tubing conforming to ASTM A108, Grade 1015 specifications with a wall thickness as shown.

SPLICE & EXP. JOINT - STEEL RAILS

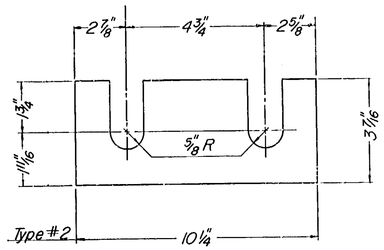

SHIM DETAIL

Shims to be made from 1/16" or 1/8" material. Shims shall not project outside of post base.

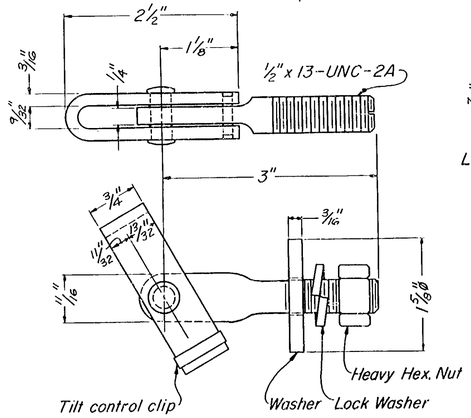

TOGGLE BOLT ASSEMBLY-TB1
TRAFFIC RAIL
Scale: 1" = 1"

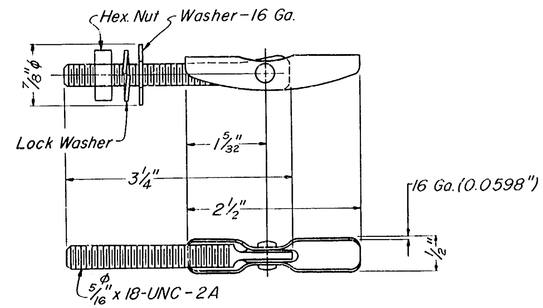

TOGGLE BOLT ASSEMBLY-TB2
PEDESTRIAN RAIL
Scale: 1" = 1"

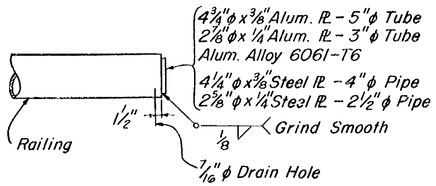

RAIL END CAP

TOGGLE BOLT NOTES:

Material for toggle bolt assembly TB1 shall be steel as follows:

Toggle bolt - ASTM - A354
Toggle " - A303
Nut " - A325
Pin " - A321
Washer ASTM - A107, Grade 1020
Required minimum tensile load to equal 9000 lbs.

All parts of assembly to be galvanized to (ASTM-A153) or cadmium plated to ASTM-A165, Type NS.

Material for toggle bolt assembly TB2 shall be steel as follows: Toggle bolt, nut, and washer ASTM-A108, Grade 1020 and Toggle A425. All parts to be cadmium plated to ASTM-A165. Required minimum tensile load to equal 1000 lbs.

RTE. 24 OVER TINKERS CREEK

METAL RAILINGS
MISCELLANEOUS DETAILS

Virginia Department of Highways
Office of the Bridge Engineer
Richmond, Virginia

DRAWN BY: SHB
TRACED BY: A.E.D.
CHECKED BY: JHB

March 1, 1967

CCIX-7
Sheet 16 of 18

1 6
1-7 0-6 0 2

FED. RD. REGION	STATE	FEDERAL AID ROUTE	FEDERAL AID PROJECT	STATE ROUTE	STATE PROJECT	SHEET NO.	TOTAL SHEETS
2	VA.			24	0024-149-102, PE101, B601	11 (17)	

Note: When dimension "b" exceeds 1'-0" use 4"x4" No. 4 gage wire mesh also. This mesh is to be placed outside the exist. reinf. steel & is to be held in position with "Ramset," "Drive-it" or a similar type fastener. Max. fastener spacing to be 1'-0" in both directions a min. of 4 fasteners per patch for small patches is req'd.

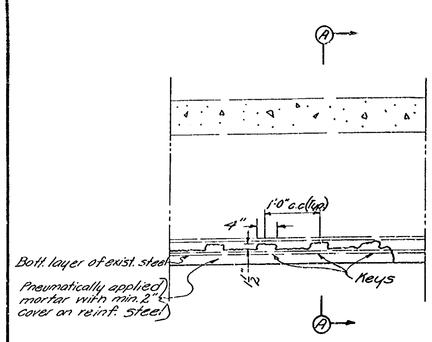

PART SIDE ELEVATION BEAM REPAIR

Scale: $\frac{3}{4}$" = 1'-0"

(This detail to be used where longitudinal steel is exposed)

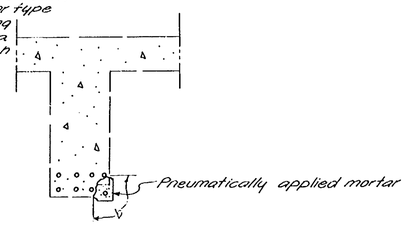

SECTION A-A

Scale: $\frac{3}{4}$" = 1'-0"

Note: Spalled or deteriorated areas on sides or bottoms of beams, where longitudinal steel is not visible, shall be repaired using detail similar to detail shown on this sheet for repairing spalled areas under beams.

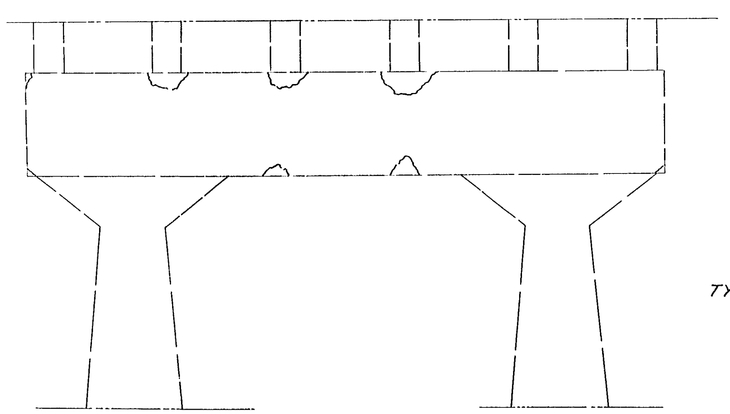

PART ELEVATION EXISTING PIER 4

(Not to Scale)

(Condition of other piers similar but in slightly better condition.)

Note: All loose & deteriorated conc. on this structure to be removed to a minimum depth of $\frac{3}{4}$". Use 4"x4" No. 4 ga. galv. wire mesh over areas of patch thickness exceeding 2" in depth. Fasten mesh with "Ramset" or "Drive-it" or similar type fastener. Max. fastener spacing to be 1'-0" both directions & min. of 4 fasteners per patch for small patches is req'd. Mesh to have a cover of 2". Also all visible reinf. steel on structure to be covered with a min. of 2" of pneumatically applied mortar.

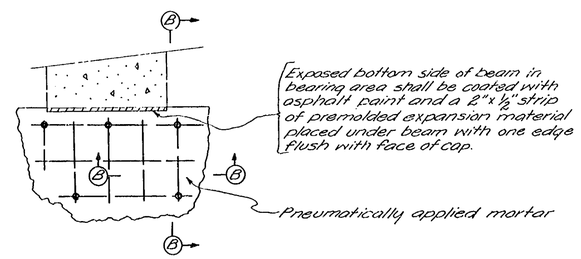

TYPICAL REPAIR DETAILS OF SPALLED AREAS UNDER BEAMS

Scale: $1\frac{1}{2}$" = 1'-0"

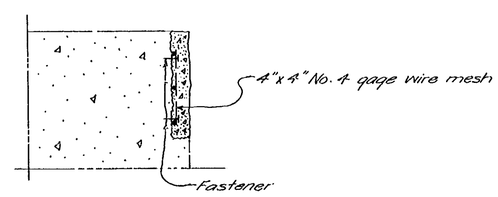

SECTION B-B

Scale: $1\frac{1}{2}$" = 1'-0"

RTE. 24 OVER TINKERS CREEK

REPAIRS

Virginia Department of Highways
Office of the Bridge Engineer
Richmond, Virginia

DRAWN BY: RWS
TRACED BY: JDE
CHECKED BY: JEA

March 1, 1967

CCIX-7
Sheet 17 of 18

2 0 9 0 7 - 1 7

PUB. RD. REGION	STATE	FEDERAL AID ROUTE	FEDERAL AID PROJECT	STATE ROUTE	STATE PROJECT	SHEET NO.	TOTAL SHEETS
2	Va.	—	—	24	0024-149-102, PE101, B601	11 (18)	

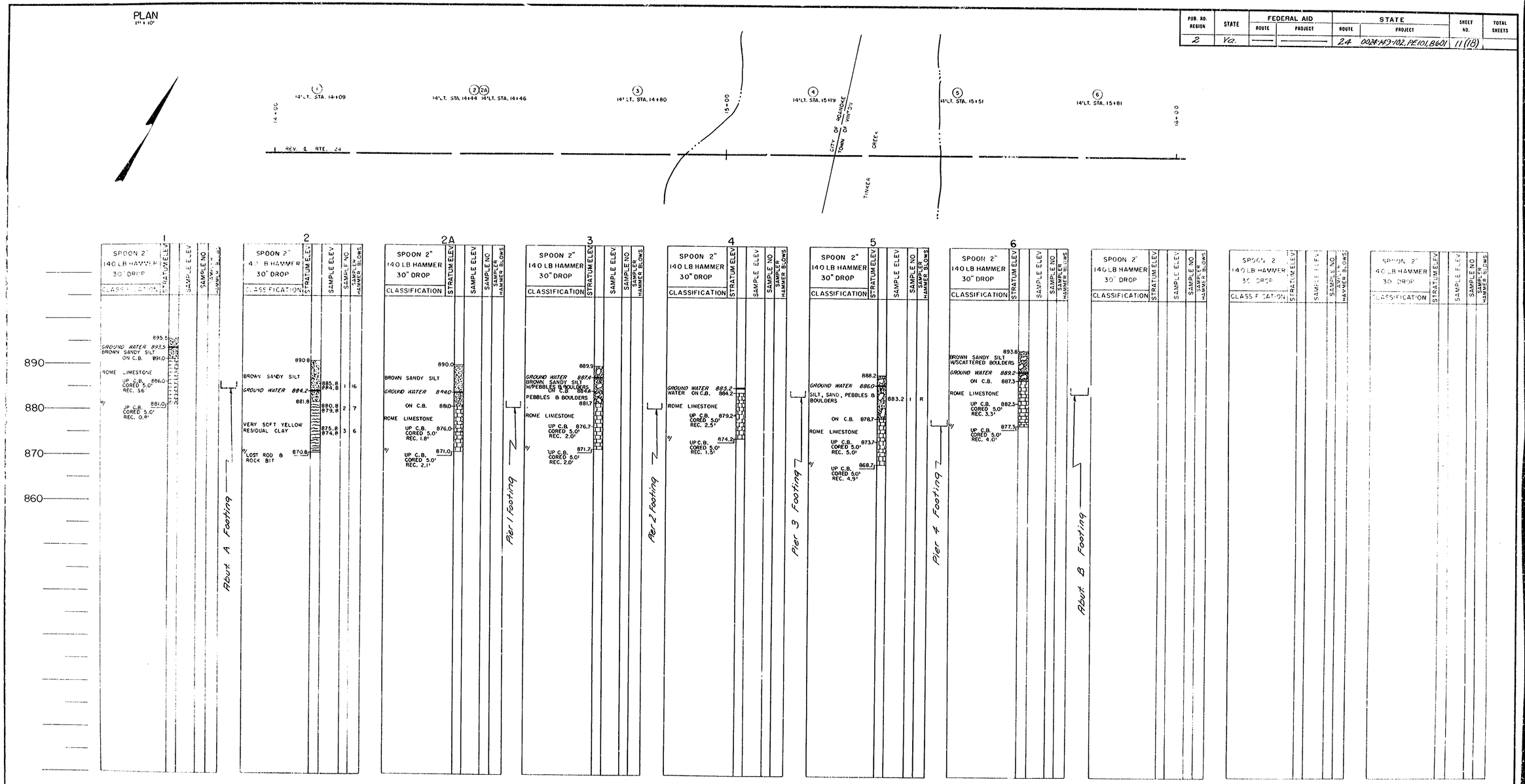

GEOLOGIC SECTION
SCALE: 1" = 10'

NOTE
THE LOGS SHOWN ON THIS PLAN WERE TAKEN FROM FIELD NOTES THEY REPRESENT THE BEST INFORMATION AVAILABLE TO THE VIRGINIA DEPARTMENT OF HIGHWAYS
°/ ELEVATION AT BOTTOM OF DRILL HOLE
EQUIPMENT - DIAMOND CORE DRILL
C.B. - CORE BARREL
R - REFUSAL

VIRGINIA DEPARTMENT OF HIGHWAYS
ROUTE NO. 24 STA. 14+09
PROJ. NO. 0024-149-102, B-601
ENGINEERING GEOLOGY
MATERIALS DIVISION
RTE. 24 OVER TINKER CREEK
TOWN OF VINTON
SEPTEMBER 29, 1966

66-52-28
SHEET 1 OF 1

Drawn by: DEA E. UNDERWOOD, JR.
Traced by: DEA E. UNDERWOOD, JR.
Checked by: CARL KUEHN

March 1, 1967

18z of 18

~~Sheet 18 of 18~~

2 0 9 - 0 7 1 8 7

ROUTE 24 PROJ. 0024-149-102 FE-101
B-601
DISTRICT= SALEM-COUNTY= ROANOKE
FROM= W.C.L. VINTON
TO= INT. OF CLEVELAND AVE.
SCALE = AS NOTED
BEARING BASED ON= PROJ. 4380-79-81
LEVELS BASED ON= PROJ. 4380-79-81
SURVEYED BY= L.E. MARKHAM PLOTTED BY= J.W. COLLINS
DATE = FEBRUARY 1965

LD-23-Rev. 7-1-56

B-601

Commonwealth of Virginia

DEPARTMENT OF HIGHWAYS

BRIDGE DATA SHEET

Situation data for design of Bridge over Tinker Creek at Roanoke & Vinton approximately 25 miles from Vinton on Nbl Railroad, at Station 24+94.51 on Route 24, Project 0024-149-102 FE-101 Date February 1965

1. GENERAL INFORMATION

Fill out all blanks carefully, giving information on all points and supplementary information on features of importance not listed. High water and foundation conditions are especially important and should be thoroughly investigated.

2. EXISTING STRUCTURE

Was present bridge in place at time of extreme high water? Yes.
Has bridge ever been washed out? No, Date: —
Explain what portion of bridge or approaches have been washed out.

3. STREAM FLOW DATA

Elev. of maximum high water of this stream at proposed location: 902.84, Date: 1928.
Source of Information: US Engineers - Taken from Plans for Proj. 4380-79.
Elev. of maximum high water of this stream on upstream side of existing structure: 902.84
Elev. of maximum high water of this stream on downstream side of existing structure: 902.5
Date: 1928, Source of Information: US Engineers
Elev. of highest backwater caused by another stream: None, Date:
Source of Information:
Elev. of normal water (average): 896.0, Elev. of extreme low water: Unknown, Date:
Source of Information:
Velocity of current at high water: Approx 3 ft./sec. Velocity of current at normal water: 1 ft./sec.
Amount and character of drift during a freshet or flood: Normal
Amount and character of ice: Normal
Do banks or bed show scour? Yes.
Description of scour: Medium
Bed of stream consists mainly of: mud, silt, clay, sand, gravel, small stones, large stones, soft solid rock, stratified rock, hard rock, silt sedimentation, deposition of small stones, deposition of large stones. Is this material loose or well compacted?
Location and condition of dams with ½ mile: None
Location and description of any water-gaging stations in the vicinity: None

Elev. on gage corresponds to elev. on survey datum.
Area of drainage basin: Source of Information:
Character of drainage basin: Terrain; Mountainous, rolling, (Lt. rolling) flat.
Soil Types: Clay
Land use: % Wooded. % Pasture. % Cultivated.
Extent to which sink-holes effect run-off, etc.
Depth of firm foundation: Approx. 4 ft. Should footing extend to solid rock? No
Will piling be necessary? No

3. REMARKS

More detailed information pertaining to section & should be determined by exc. drilling.

Survey by L. E. Markham

209-07
19 y of 22

~NOTE~
OIL LINE = Prop. of Plantation Pipe Line Co. Atlanta, Georgia.
GAS LINE = Prop. of Roanoke Gas Co. Roanoke, Va.
10" WATER LINE = Prop. of City of Roanoke Roanoke, Va
TELEPHONE POLES = PROP. OF C&P Telephone Co. Roanoke, Va.
UNDER GROUND TELE. CABLES = Prop. of C&P Telephone Co. Roanoke Va.
TELEGRAPH POLES = Prop. A.T.&T. Co. Roanoke, Va.
From Sta. 10+00 - 14+33 Water & Sewer Lines Prop. of City of Roanoke
From Sta. 14+33 - 48+00 Water, Sewer & Storm Drain Lines Prop. of Town of Vinton.

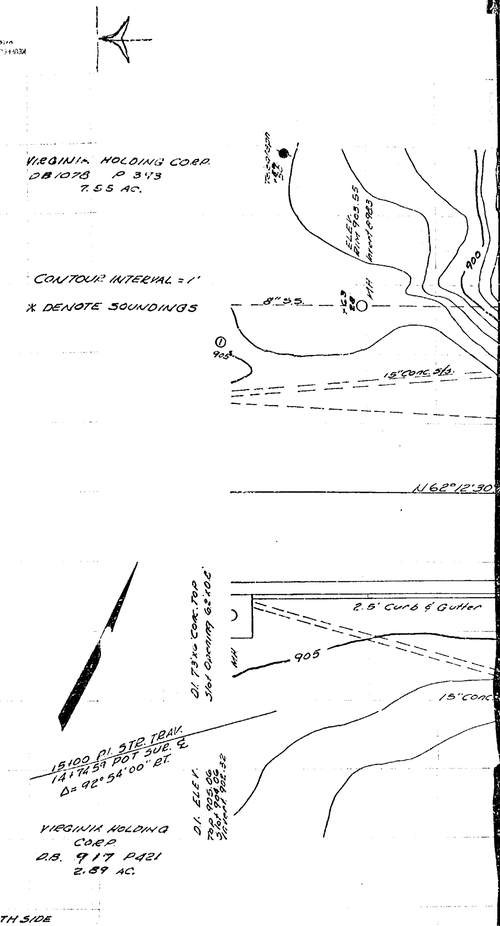

B.M.
CHIS "D" ON SOUTH SIDE WEST ABUT. DALE AVE BR. ELEV. 905.48

~NOTE~
HIGH WATER OBTAINED FROM PROJ. 4380-79-81 PLANS

910
900
890
880

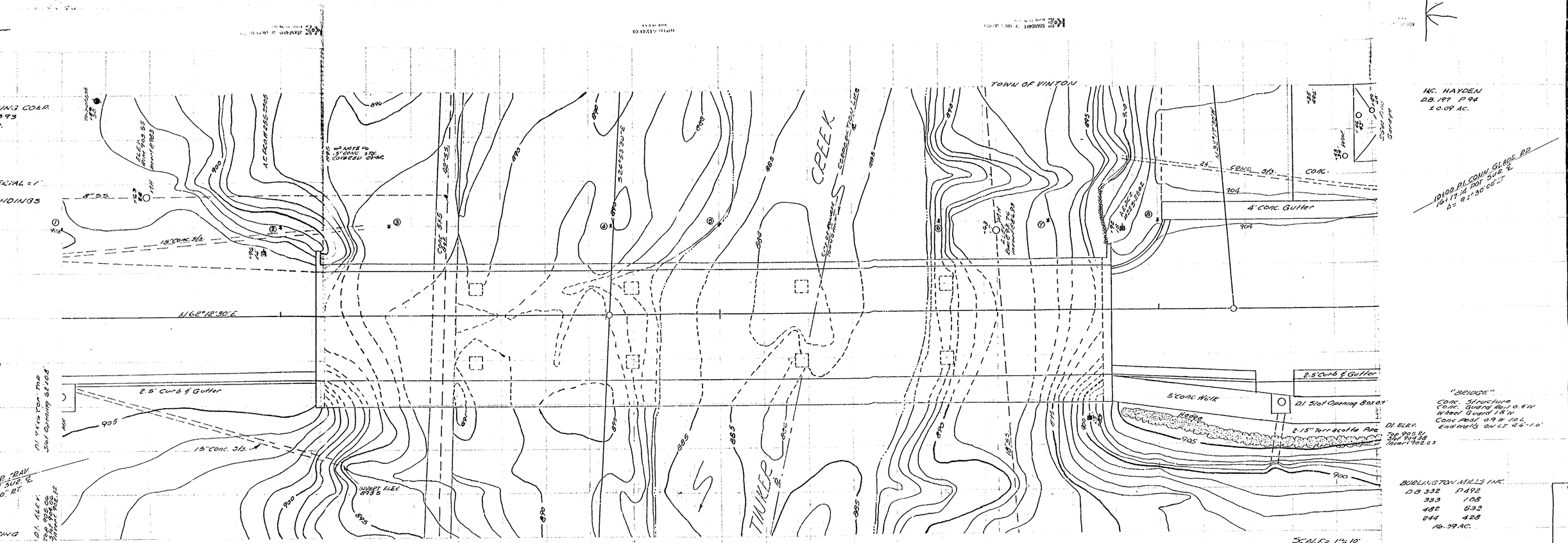
TOWN OF VINTON
CREEK
THINKER
N 62°12'30" E
S 24°53'30" E
CONC. STRS.
8" SS
15" CONC. Sts.
2.5' Curb & Gutter
5' Conc. Walk
Hedge
2.15" Terra cotta Pipe
4' Conc. Gutter
FENCE
CONC.
HC. HAYDEN
DB. 197 P. 94
± 0.09 AC.
10100 PI. COWN GLOBE RD
16+17.14 POT. SUR. ℄
Δ = 91°30' CO.LT
"BRIDGE"
Conc. Structure
Conc. Guard Rail 0.4' W
Wheel Guard 1.8' W
Conc Post 0.9' W 10'L
End walls on I.T. 4.6'-1.0'
BURLINGTON MILLS INC.
DB 332 P 492
333 108
482 593
244 428
16.39 AC.
SCALE = 1" = 10'
HIGH WATER ELEV. 902.84 OCCURRED 1988
NORMAL WATER ELEV. 886.0
SCALE = 1" = 10' HOR.
1" = 10' VER.
209-07
20y of 22

Y0220 0-6 0 2 7

H.C. HAYDEN
D.B. 197 P 94
± 0.09 AC.

10100 PI COUN GLADE RD.
101+17.14 POT. SUP. ℄
Δ= 94°30' 00"LT

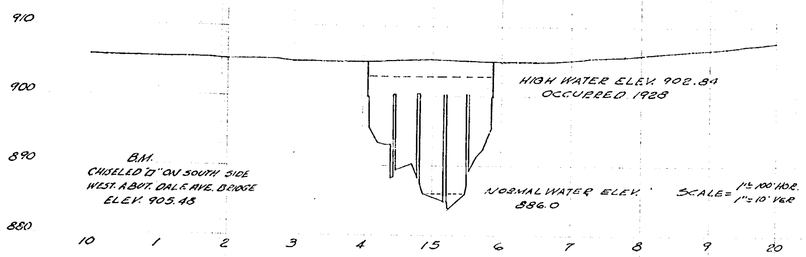

"BRIDGE"
Conc. Structure
Conc. Guard Rail 0.4'W
Wheel Guard 1.8'W.
Conc. Post 0.9'W. 1.9'L.
End walls on LT. 46'-1.0'

DI. ELEV.
Top 96.52
Sill 93.38
Invert 92.03

BURLINGTON MILLS INC.
D.B. 332 P 492
333 108
482 533
244 428
16.39 AC.

STREAM TRAV. LT.℄ RT. STA. 14+74.59

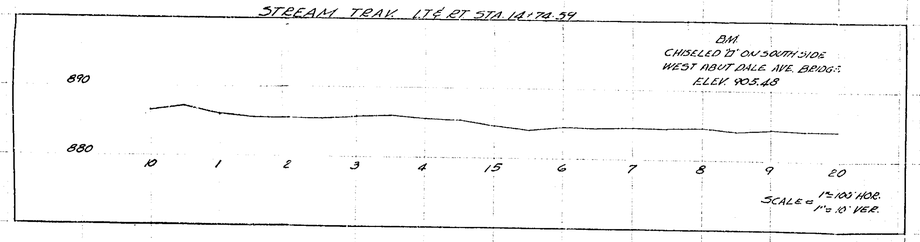

COUN. GLADE RD. LT. STA. 16+17.14

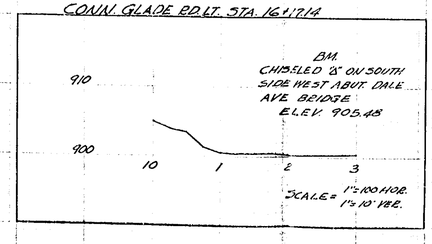

SOUNDINGS 20' LT ℄

① 904.7	② 901.2	③ 893.7
898.9 Clay	893.3 Clay	887.7 Sand & River Rock
④ 891.0	⑤ 887.0	⑥ 887.7
883.2 Sand & River Rock	883.0 Sand & River Rock	884.5 Rock
⑦ 893.0	⑧ 904.2	
885.2 Sand	896.7 Sand & Clay	

VIRGINIA HOLDING CORP.
D.B. 1078 P 393
7.56 AC.

15100 PI SR. 7 ℄
14+42.84 POT. SUP. ℄
Δ= 92°30'00" RT.

CITY
D.B.
2.

TO ROANOKE

910.0 PI ROCK W.W. RR.
19+46.38 POT. SUP. ℄

PURITAN
D.B. 751
4.44 AC.

VIRGINIA HOLDING CORP.
D.B. 917 P 421
289 AC.

209-07
21 of 22

0 2 1 7 0 6 0 2

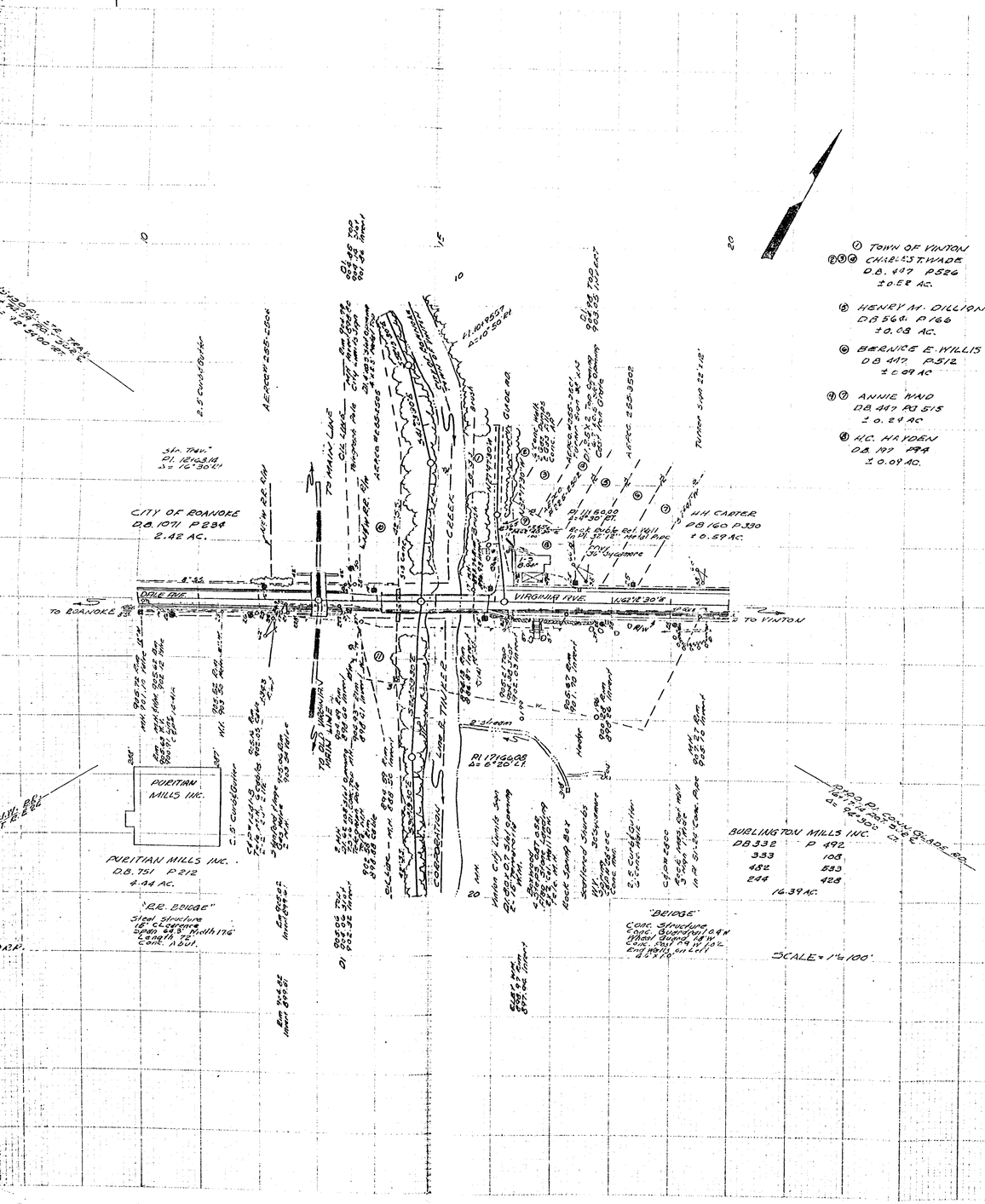

209-07
22 of 22