City of Roanoke
Invitation to Bid

Date: February 19, 2016

Bid Number: **ITB# 16-07-16** **Crane & Rigging Services for Demolition and Placement of Piping and Equipment**	Bid Opening Date**:** **March 4, 2016** Bid Opening Time: **2:00 p.m.**
Terms: **Net 30**	
Work Site: Berglund Center, 710 Williamson RD NE, Roanoke, VA 24016	
Legal Name of Bidder (SCC Registration):	
Mailing Address:	
Phone: Fax: E-mail:	

Acknowledge each addendum received:	# Date	# Date	# Date	# Date
Printed name of authorized person submitting Bid:				

Issued by:	City of Roanoke Purchasing Division Noel C. Taylor Municipal Building 215 Church Ave SW, Room 202 Roanoke, VA 24011	Simone Knowles Purchasing Manager Phone: 540-853-2871 Email: simone.knowles@roanokeva.gov

THIS PUBLIC BODY DOES NOT DISCRIMINATE AGAINST FAITH BASED ORGANIZATIONS

No Bid may be withdrawn within a period of sixty (60) days after Bid opening except for clerical errors, as set forth in part (1) of Section 2.2-4330(B), Virginia Code, 1950, as amended.

The City reserves the right to cancel or reject any or all Bids and to waive any informalities in any Bid.

This Invitation to Bid consists of these parts:

1. All Sections of the Invitation to Bid.
2. Bid Form (Attachment A).
3. Sample Contract (Attachment B)
4. Cards Payable Application (Attachment C)

CITY OF ROANOKE, VIRGINIA
INVITATION TO BID NO. 16-07-16

SECTION 1. PURPOSE: The purpose of this Invitation to Bid (ITB) is the procurement of Crane & Rigging Services for Demolition and Placement of Piping and Equipment and components in a brine and chiller room at the Berglund Center. The City is also requesting an alternate bid for hourly compensation for support services by qualified riggers on an as needed basis.

The City of Roanoke invites any qualified Bidder to respond to this ITB by submitting a Bid for such work, service, and/or items consistent with the terms and conditions herein set forth.

SECTION 2. BACKGROUND NOT USED.

SECTION 3. SERVICES AND/OR ITEMS REQUIRED: **A description and/or listing of the services and/or items that the Successful bidder will be required to provide to the City under this ITB are those that are set forth below and/or referred to in any way in the sample contract, any terms and conditions, and/or any attachments referred to in this ITB. Each Bidder should carefully read and review all such documents.**

The following are the services and/or items that the Successful Bidder shall provide to the City of Roanoke:

Primary Bid:

A. Work will take place at the Berglund Center, 710 Williamson RD NE, Roanoke, VA 24016.
B. Demolition and rigging of the items listed in Exhibit 4 (Chiller Room Demo Drawing) and Exhibit 5 (Brine Room Demo Drawing) will occur in the brine room and involves the removal of three compressors and associated components highlighted in the room drawings as well as the rigging (setting in place) of two chillers and associated components.
C. Chillers to be set in place have dimensions of 145.5” length, 68.2” width, and 76.1” height with a shipping weight of 16,187 lbs.
D. All work shall be completed within 14 days and no later than 21 days after award.
E. Work may be completed during Berglund Center events and hours of operation without disruptions.
F. Contractor shall be at the site at time of delivery to unload chillers from the manufacturer’s delivery truck.
G. Successful bidder shall dispose of all removed equipment and components.
H. Final installation of components will be completed by the City of Roanoke.

Alternate Bid:

A. Bidder to provide an hourly rate for onsite support services. Qualified Riggers will be scheduled upon request to assist City Employees in the installation and support of associated work to the primary project.

SECTION 4. REQUIRED QUALIFICATIONS FOR BIDDERS:

A. Bidders shall be commissioned by the National Commission for Certification of Crane Operators
B. Bidders shall be certified crane operators
C. Bidders must possess at a minimum, a Certified Rigger Level II certification through NCCCO.

SECTION 5. TERM OF CONTRACT:

A. The Successful Bidder shall start the performance of any resultant Contract **as fixed by a notice to proceed given by the City to the Successful Bidder** and fully and completely perform the Contract to remove the items listed in Exhibit 4 (Chiller Room Demo Drawing) and Exhibit 5 (Brine Room Demo Drawing) within 14 consecutive calendar days after such date, all in accordance with the Contract

provisions. The City and Successful Bidder will agree upon a date to place the items listed in Exhibit 6 (Chiller Diagram).

SECTION 6. PAYMENT FOR SERVICES: Payment(s) to the Successful Bidder shall be made in accordance with the provisions of the resultant Contract, subject to final approval by the City.

SECTION 7. GENERAL INSTRUCTIONS TO BIDDERS:

A. Sealed Bids, to be considered, must be received by the City of Roanoke in the Purchasing Division, 215 Church Avenue, S.W., Noel C. Taylor Municipal Building, Room 202, Roanoke, Virginia 24011, at or before 2:00 p.m., local time, on March 4, 2016, at which time all Bids received will be publicly opened and read. Bids received after 2:00 p.m. will not be accepted or considered. The time of receipt shall be determined by the time clock stamp in the Purchasing Office, or if it is not working, such time shall be determined by the Purchasing official who is to open the Bids. The ITB and related documents may be obtained from the City's Vendor Self Services system, https://VSS.roanokeva.gov, or during normal business hours from the Purchasing Division (540) 853-2871, or from the City's web site at https://www.roanokeva.gov/purchasing. If the Noel C. Taylor Municipal Building is closed for business at the time scheduled for the proposal opening, the sealed proposal will be accepted and opened on the next business day of the City, at the originally scheduled hour.

There are two (2) **mandatory** pre Bid conferences scheduled for 9:00 am and 2:00 pm on Thursday, February 25, 2016 at the Berglund Center primary loading dock between the coliseum and the Special Events Center.
It is required that Bidders attend one (1) conference.

The sealed envelope shall be clearly marked on the front of that envelope with the notation and completed information as follow:

"**Sealed Bid Number: ITB 16-07-16 Crane & Rigging Services for Demolition and Placement of Piping and Equipment.**
Opening Date: March 4, 2016 and Time: 2:00 p.m.".

FAXED OR E-MAILED BIDS ARE NOT ACCEPTABLE.

B. **If you download this ITB from the City website and intend to submit a proposal, you should notify Purchasing that you have done so. However, each Bidder is solely responsible for ensuring that such Bidder has the current, complete version of the ITB documents, including any addenda, before submitting a bid. Receipt by the bidder of such addendum should be acknowledged on the Bid Form and/or addendum. Addenda will be posted on Vendor Self Service (VSS) at https://VSS.roanokeva.gov as well as the Current Bids/RFP Requests tab on the Purchasing Division's web page at www.roanokeva.gov/purchasing.The City is not responsible for any ITB obtained from any source other than the City. Contact Simone Knowles, Purchasing Manager, by phone at 540-853-2871, or by email at simone.knowles@roanokeva.gov.**

C. Payment terms and delivery date(s) must be shown on the submitted Bid, if applicable.

D. All Bids are to be submitted in accordance with all terms, conditions, rules, regulations, requirements and specifications identified in and by this ITB.

E. Bids are to be on the Form as provided with or as otherwise specified in this ITB. If a Bid Form is provided, no changes are to be made to the Bid Form. Any changes to Bid amounts must be initialed.

F. All Bids shall be signed by a person on behalf of the responding Bidder who is appropriately authorized to do so. The printed name of that authorized person should be shown as well. Any Bid submitted should be in the complete legal name of the Bidder responding. No Bid will be considered from any Bidder not properly licensed as may be required by law.

G. Bids that have been appropriately opened cannot be changed, adjusted, corrected or modified in any way other than complete withdrawal. The City's procedures for withdrawal of bids (whether construction or other than construction) is that set forth in Code of Virginia, §2.2-4330(A)&(B)(1), which allows withdrawal of a Bid due to an error such as an unintentional arithmetic error or an unintentional omission of a quantity of work, labor or material made directly in the compilation of a Bid, which unintentional arithmetic error or unintentional omission can be clearly shown by objective evidence drawn from inspection of original work papers, documents and materials used in the preparation of the Bid. Withdrawal must be requested within two days of the Bid opening by delivering to the City original work papers, documents, and materials used in preparation of the Bid.

H. All Bids, appropriately received, will be evaluated by considering the requirements set forth in the ITB, the quality, workmanship, economy of operation, suitability for intended purpose, delivery, payment terms and price of product or service being requested in this Bid.

I. Bids are to be submitted on the type, brand, make, and/or kind of product and/or service requested or its approved equal, to be solely determined by the City, unless otherwise specified. Should a Bid be for a product and/or service as an equal, the name, make, model and type of that which is being Bid must be clearly stated. The Bid must also be accompanied by descriptive literature of the product or service Bid to allow for evaluation. Failure to provide this information may result in the Bid being considered non-responsive and may not be considered.

J. If an award is made for the item(s) and/or services requested, a notice of award will be made which will be posted to a file in the City's Purchasing Division, Room 202, telephone no. 540-853-2871, and notification of such award will be made available for Public view in the lobby of the Noel C. Taylor Municipal Building, 215 Church Ave., S.W., Roanoke, VA. 24011, as well as, on City's electronic procurement website. Upon completion of the contract, payment will be made only to the Successful Bidder at the address as shown on the contract. If the remittance address is other than the address on the Bid, it must be clearly noted and explained in the Bid. Contract(s) will be paid only when the items and/or services have been supplied to and approved by the City.

K. All items, identified in this ITB, are to be quoted and provided **F.O.B. DESTINATION-INSIDE DELIVERY,** unless otherwise stated in this ITB**.** All furniture items, if any, are to be put together and set in place.

L. The City reserves the right to cancel this ITB or reject any or all Bids, to waive any informalities in any Bid and to purchase any whole or part of the items and/ or services listed in the ITB.

M. Each Bidder is to notify in writing the Purchasing Division if any of Bidder's owners, officers, employees, or agents, or their immediate family members, is currently or has been in the past year, an employee of the City of Roanoke or has any responsibility or authority with the City that might affect the procurement transaction or any claim resulting therefrom. If so, please provide the Purchasing Division with the complete name and address of each such person and their connection to the City of Roanoke. Each Bidder is advised that the Ethics in Public Contracting and Conflicts of Interests Act of the Code of Virginia, as set forth in this ITB, apply to this ITB. Such information should be provided in writing before the Bid opening date or may also be provided with the Bid response.

N. **The attention of each Bidder is directed to VA Code Sections 54.1-1100 <u>et seq.</u> which requires certain licenses for contractors, tradesmen and others. Each Bidder is required to determine which license, if any, it is required to have under such sections. Each Bidder shall so state on the Bid Form, or in its response, if no Bid Form is provided, whether it has a VA license under**

such sections and, if so, the type of license and/or license number. Failure to include this information may result in the Bid being rejected as non-responsive.

O. **Bid Submittals shall include**:

1. **Page 1, Invitation to Bid**
2. **Page 9, The Bid Form (Lump sum shall include all labor, material, delivery costs, overhead and profit.)**

Failure to do so may result in the Bid being determined as non-responsive.

Questions or concerns may be addressed by contacting Simone Knowles, Purchasing Manager, at (540) 853-2871 or by email at simone.knowles@roanokeva.gov.

P. Ethics in Public Contracting. The provisions, requirements, and prohibitions as contained in Sections 2.2-4367 through 2.2-4377, of the Virginia Code, pertaining to bidders, offerors, contractors, and subcontractors are applicable to this ITB.

Q. Conflict of Interests Act. The provisions, requirements, and prohibitions as contained in Sections 2.2-3100, et seq., of the Virginia Code are applicable to this ITB.

R. The procurement provisions of the Code of the City of Roanoke (1979), as amended, Sections 23.2-1, et seq., as well as the City Procurement Manual, applies to this ITB, unless specifically modified herein. The City's Procurement Manual can be reviewed at the Purchasing office.

S. The City may request clarification from any of the Bidders after review of the Bids received.

T. The City is not liable for any costs incurred by any Bidder in connection with this ITB or any response by any Bidder to this ITB. The expenses incurred by a Bidder in the preparation, submission, and presentation of the Bid are the sole responsibility of the Bidder and may not be charged to the City.

U. General and/or technical questions regarding the Scope of Services and/or items required, or procurement questions under this ITB may be directed to Simone Knowles, Purchasing Manager, at (540) 853-2871, or by email at simone.knowles@roanokeva.gov.

V. Each Bidder is required to state if it has ever been debarred, fined, had a contract terminated, or found not be a responsible bidder or Offer or by any federal, state, or local government and/or private entity. If so, please give the details of each such matter and include this information with Bidder's response.

W. Each Bidder who is a stock or Nonstock Corporation, Limited Liability Company, business trust, or a limited partnership or other business entity shall be authorized to transact business in the Commonwealth of Virginia as a domestic or foreign business entity if required by law. Each such Bidder shall include in its bid response the Identification Number issued to it by the Virginia State Corporation Commission (SCC) and should list its business entity name as it is listed with the SCC. Any Bidder that is not required to be authorized to transact business in the Commonwealth as a domestic or foreign business entity as required by law shall include in its bid response a statement describing why the Bidder is not required to be so authorized. (See Va. Code Section 2.2-4311.2).

X. Direct contact with any City employee without the permission of the Purchasing Manager or her designated representative, on the subject of this bid, is strictly forbidden. Violation of this Instruction may result in disqualification of Bid.

SECTION 8. MISCELLANEOUS:

A. Ownership of all data, materials, and documentation originated and prepared for the City pursuant to the ITB shall belong exclusively to the City and be subject to public inspection in accordance with the *Virginia Freedom of Information Act*. The trade secrets or proprietary information submitted by the Bidder shall not be subject to public disclosure under the *Freedom of Information Act*, unless otherwise required by law or a court. **However, the Bidder must invoke the protection of Section 2.2-4342(F) of the Code of Virginia, in writing, either before or at the time the data or other material is submitted.** The written notice must SPECIFICALLY identify the data or materials to be protected and state the reason why protection is necessary. The proprietary or trade secret material submitted must be identified by some distinct method such as highlighting or underlining and must indicate only the specific words, figures, or paragraphs that constitute trade secret or proprietary information. The classification of an entire proposal document, line item prices, and/or total proposal prices as proprietary, or trade secrets, is NOT ACCEPTABLE and may result in REJECTION of the Bid.

B. All Bidders shall be solely responsible for making sure that they have the most current and complete version of this ITB and all addenda that may have been issued for this ITB and that such Bidder has examined all such documents and data. Any interpretation, correction, or change of the ITB will be made by an addendum. Interpretations, corrections or changes of this ITB made in any other manner will not be binding and Bidders must not rely upon such interpretations, corrections, or changes. The City of Roanoke Purchasing Division will issue Addenda. Addenda will be posted on Vendor Self Service (VSS) at https://VSS.roanokeva.gov as well as the Current Bids/RFP Requests tab on the Purchasing Division's web page at www.roanokeva.gov/purchasing.

C. No Bidder shall confer on any public employee having official responsibility for a purchasing transaction any payment, loan, subscription, advance, deposit or money, service, or anything of more than nominal value, present or promised, unless consideration of substantially equal or greater value is exchanged.

D. The City may make investigations to determine the ability of the Bidder to perform the work and/or provide the services and/or items as described in this ITB. The City of Roanoke reserves the right to reject any Bid if the Bidder fails to satisfy the City of Roanoke that it is qualified to carry out the obligations and requirements requested in this ITB.

E. The Successful Bidder must comply with the nondiscrimination provisions of Virginia Code Section 2.2-4311, which are incorporated herein by reference.

F. The Successful Bidder must comply with the drug-free workplace provisions of Virginia Code Section 2.2-4312, which are incorporated herein by reference.

G. It is the policy of the City of Roanoke to maximize participation by minority and women owned and small business enterprises in all aspects of City contracting opportunities.

H. The Successful Bidder shall comply with all applicable City, State, and Federal laws, codes, provisions, and regulations. The successful Bidder shall not during the performance of any resultant contract knowingly employ an unauthorized alien as defined in the federal Immigration Reform and Control Act of 1986.

I. Providers of any outside services and/or items shall be subject to the same conditions and requirements as the Successful Bidder in regards to law, code, or regulation compliance. The City reserves the right of approval for any subcontract work, including the costs thereof.

SECTION 9. EVALUATION FOR LOWEST RESPONSIVE AND RESPONSIBLE BIDDER: To determine the lowest responsive and responsible Bidder with respect to this Bid, the following factors, among such others as will protect and preserve the interest of the City may be considered:

A. Total lump sum price as set forth on the Bid Form;
B. The specified terms and discounts, if any, of the Bid;

C. The ability, capacity and skill of the Bidder to perform the Contract and/or provide the services and/or items required;
D. Whether the Bidder can perform the Contract and/or perform the services and/or provide the items promptly, or within the time specified, without delay or interference;
E. The character, integrity, reputation, judgment, experience and efficiency of the Bidder;
F. The quality of performance on previous contracts or services;
G. The previous and existing compliance by the Bidder with laws and ordinances relating to other contracts, purchase orders, items and/or services provided by Bidder in other matters;
H. The equipment and facilities available to the Bidder to perform the Contract and/or provide the services and/or items requested in the ITB;
I. The sufficiency of the financial resources and ability of the Bidder to perform the Contract and/or provide the services and/or items requested in the ITB;
J. The quality, availability, and adaptability of the supplies, materials, equipment and/or services the Bidder can provide for the particular use and/or work requested in the ITB; and
K. The ability of the Bidder to provide future maintenance, parts, and service for the items requested in the ITB.

SECTION 10. CONTRACTOR'S AND SUBCONTRACTOR'S INSURANCE: Successful Bidder, and any of its subcontractors, shall, at its sole expense, obtain and maintain during the life of the resulting Contract insurance policies and/or bonds required. Any required insurance policies and/or bonds shall be effective prior to the beginning of any work or other performance by Successful Bidder, or any of its subcontractors, under any resultant Contract. All such insurance shall be primary and noncontributory to any insurance or self-insurance the City may have. The policies and coverages required are those as may be referred to in the sample contract and the terms and conditions attached to this ITB, but shall include workers' compensation coverage regardless of the number of employees, unless otherwise approved by the City's Risk Manager.

SECTION 11. NEGOTIATIONS WITH LOWEST RESPONSIVE AND RESPONSIBLE BIDDER: If the Bid by the lowest responsive and responsible Bidder exceeds available funds, the City reserves the right to negotiate with the apparent low Bidder pursuant to §2.2-4318 Code of Virginia. The conditions and procedures under which such negotiation may be undertaken are as follows: the appropriate City officials shall determine that the lowest responsive and responsible Bid exceeds available funds, and notify such Bidder in writing of its desire to negotiate. Thereafter, negotiations with the apparent low Bidder may be held to obtain a contract within available funds involving discussions of reduction of quantity, quality, or other cost saving mechanisms. Any such negotiated contract shall be subject to final approval of the City, in the sole discretion of the City.

SECTION 12. BID AWARD: If an award of a Contract is made, it will be made to the lowest responsive and responsible Bidder and notice of the award or the intent to award will be made by posting a notice of such award or announcement on the Awarded Bids Tab on the Purchasing Division web page at www.roanokeva.gov/purchasing and in the foyer area of the 2nd Floor of the Noel C. Taylor Municipal Building at 215 Church Avenue, S.W., Roanoke, Virginia 24011.

SECTION 13. FAITH BASED ORGANIZATIONS: Pursuant to Virginia Code Section 2.2-4343.1, be advised that the City does not discriminate against faith-based organizations.

SECTION 14. HOLD HARMLESS AND INDEMNITY: Successful Bidder shall indemnify and hold harmless the City and its officers, agents, and employees against any and all liability, losses, damages, claims, causes of action, suits of any nature, costs, and expenses, including reasonable attorney's fees, resulting from or arising out of Successful Bidder's or its employees, agents, or subcontractors actions, activities, or omissions, negligent or otherwise, on or near City's property or arising in any way out of or resulting from any of the work or items to be provided under the Contract, and this includes, without limitation, any fines or penalties, violations of federal, state, or local laws or regulations, personal injury, wrongful death, or property damage claims or suits. Successful Bidder agrees to and shall protect, indemnify, and hold harmless all the parties referred to above from any and all demands for fees, claims, suits, actions, causes of action, settlement or judgments based on the alleged or actual infringement or violation of any copyright, trademark, patent, invention, article, arrangement, or other apparatus that may be used in the performance of the Contract.

SECTION 15. PROTESTS: Any Bidder who wishes to protest or object to any award made or other decisions Pursuant to this ITB may do so only in accordance with the provisions of Sections 2.2-4357, 4358, 4359, 4360, 4363, and 4364 of the Code of Virginia, and only if such is provided for in such Code section. Any such protest or objection must be in writing signed by a representative of the entity making the protest or objection and contain the information required by the applicable Code Sections set forth above. Such writing must be delivered to the City Purchasing Manager within the required time period.

SECTION 16. COOPERATIVE PROCUREMENT: The procurement of goods and/or services provided for in this procurement is being conducted in accordance with Virginia Code Section 2.2-4304 and on behalf of other public bodies in Virginia. Unless specifically prohibited by the Successful Bidder, any resultant contract may be used by other public bodies in Virginia as allowed by Section 2.2-4304. The Successful Bidder shall deal directly with each public agency or body seeking to obtain any goods and/or services pursuant to this procurement or from this procurement and in accordance with Virginia Code Section 2.2-4304. The City of Roanoke shall not be responsible or liable for any costs, expenses, or any other matters of any type to either the Bidder or the public agency or body seeking to obtain any goods and/or services pursuant to this cooperative procurement provision.

SECTION 17. INFORMATION ON CONTRACT/PURCHASE ORDER TO BE AWARDED: The Sample Contract marked as Attachment B to ITB No. 16-07-16 contains terms and conditions that the City plans to include in any contract/purchase order that may be awarded, but such terms and conditions may be added to, deleted, or modified as may be agreed to between the City and the Successful Bidder. However, if a Bidder has any objections to any of the terms or conditions set forth in the Sample or any changes or additions thereto that the Bidder wants to discuss before submitting a bid, the Bidder should set forth such objections, changes, or additions in written correspondence to the Purchasing Division at least five (5) days before the bid opening date for this ITB. Otherwise, submission of a bid by a Bidder will obligate such Bidder, if it is the Successful Bidder, to enter into a contract/purchase order containing the same or substantially similar terms and conditions as contained in such Attachment, and to comply with such terms and conditions. Also, such terms and conditions, together with the requirements of this ITB, shall be deemed to be a part of any resultant Contract/Purchase Order that may be issued by the City to the Successful Bidder.

END.

ATTACHMENT A
TO
ITB #16-07-16
Crane & Rigging Services for Demolition and Placement of Piping and Equipment

BID FORM/SPECIFICATIONS

Primary	Unit of Measure	Extended Bid Price
Crane & Rigging Services for Demolition and Placement of Piping and Equipment	**Lump Sum**	$_____

Alternate Item #1	Unit of Measure	Bid Price
As Needed Onsite Support Services	**Hourly Rate**	$_____

The City reserves the right to add, delete, or adjust quantities, and to award in part or in whole as deemed necessary by the City.

LUMP SUM AND HOURLY RATE SHALL INCLUDE ALL CHARGES AND FEES.

Bids containing any conditions, omissions, unexplained erasures, alterations or items not called for in the bid, or irregularities of any kind, may be rejected by the City as being nonresponsive. No changes are to be made to the Bid Form. Any changes to a Bid Amount must be initialed by the person signing the Bid Form.

The attention of each Bidder is directed to VA Code sections 54.1-1100, et seq. which requires certain licenses for contractors, tradesmen, and others. Each Bidder is required to determine which license, if any, it is required to have under such sections. Complete the following:

Bidder ___ does have ___ does not have a Virginia Contractor's License. (Check appropriate block)
If Bidder has a Virginia Contractor's License, circle the class Bidder has and list the number.
Licensed "Class A", "Class B", or "Class C" Virginia Contractor Number _____

If Bidder has another type of Virginia License, please list the type and number:
Type of license _____ and number: _____.

Bidder is a __ resident or __ nonresident of Virginia. (Check appropriate blank. See VA Code Sections 54.1-1100, et seq).

The attention of each Bidder is directed to Virginia Code Section 2.2-4311.2 which requires a bidder organized or authorized to transact business in the Commonwealth of Virginia pursuant to Title 13.1 or Title 50 of the Code of Virginia, as amended, or as otherwise required by law, shall include in its bid the Identification Number issued to such bidder by the Virginia State Corporation Commission (SCC). Furthermore, any bidder that is not required to be authorized to transact business in the Commonwealth of Virginia as a domestic or foreign business entity under Title 13.1 or Title 50 or as otherwise required by law shall include in its bid a statement describing why the bidder is not required to be so authorized. Please complete the following by checking the appropriate line that applies and providing the requested information:

Signature page required with submittal of bid

A._____ Bidder is a Virginia business entity organized and authorized to transact business in Virginia by the SCC and such bidder's/offeror's Identification Number issued to it by the SCC is _____.

B._____ Bidder is an out-of-state (foreign) business entity that is authorized to transact business in Virginia by the SCC and such bidder's Identification Number issued to it by the SCC is _____.

C._____ Bidder does not have an Identification Number issued to it by the SCC and such bidder is not required to be authorized to transact business in Virginia by the SCC for the following reason(s):
_____
_____
_____

Please attach additional sheets of paper if you need more space to explain why such bidder is not required to be authorized to transact business in Virginia.

The undersigned hereby agrees, if this Bid is accepted by the City, to provide the services and/or items in accordance with this Invitation for Bid and to execute a Contract for such services and/or items.

_____ _____
Legal Name of Bidder Date

_____
Authorized Signature

_____
Print or Type Name and Title

REMAINDER OF PAGE INTENTIONALLY LEFT BLANK

ATTACHMENT B
TO
ITB #16-07-16

Crane & Rigging Services for Demolition and Placement of Piping and Equipment

CITY OF ROANOKE, VIRGINIA
SAMPLE CONTRACT BETWEEN CITY OF ROANOKE AND
_____
CRANE & RIGGING SERVICES FOR DEMOLITION AND PLACEMENT OF PIPING AND EQUIPMENT

This Contract # _____ is dated _____, 2016, between the City of Roanoke, Virginia, a Virginia municipal corporation, hereinafter referred to as the "City" or "Owner", and

_____
(legal name and address of contractor

hereinafter referred to as the "Contractor,"

WITNESSETH:

WHEREAS, Contractor has been awarded this Contract by the City for furnishing all equipment, materials, goods, labor, and services necessary for Crane, & Rigging Services for Demolition and Placement of Piping and Equipment which includes the removal of three compressors and the setting of two chillers and associated work in accordance with this Contract and the documents referred to herein, all such items or services also being referred to hereinafter as the Work or Project.

NOW, THEREFORE, THE CITY AND THE CONTRACTOR AGREE AS FOLLOWS:

SECTION 1. WORK TO BE PERFORMED AND DOCUMENTS.

For and in consideration of the money hereinafter specified to be paid by the City to the Contractor for the Work provided for in this Contract to be performed by the Contractor, the Contractor hereby covenants and agrees with the City to fully perform the services, provide any materials called for to construct, and complete the Work called for by this Contract in a good and workmanlike manner in accordance with this Contract and the documents referred to herein in order to fully and properly complete this Contract within the time stipulated, time being made of the essence for this Contract. It is also agreed by the parties hereto that the documents to this Contract consist of this Contract and the following documents listed below (Contract Documents), all of which are and constitute a part of this Contract as if attached hereto or set out in full herein, viz:

1. Insurance Requirements (Exhibit 1).
2. Scope of Work (Exhibit 2).
3. Bid Form Completed by Contractor and dated March 4, 2016 (Exhibit 3). **(To be provided after selection of Successful Bidder.)**
4. Chiller Room Demo Drawing (Exhibit 4)
5. Brine Room Demo Drawing (Exhibit 5)
6. Chiller Diagram (Exhibit 6)
7. New Equipment Drawing (Exhibit 7)
8. Invitation to Bid No. 16-07-16, which is incorporated herein by reference.

The parties agree that if there are any differences between the provisions of the above referenced documents, the provisions of the City documents and this Contract will control over any Contractor supplied documents or information.

SECTION 2. CONTRACT AMOUNT.

The City agrees to pay the Contractor for the Contractor's complete and satisfactory performance of the Work, in the manner and at the time set out in this Contract, but the total amount for all such requests will not exceed $_____ , as provided for in this Contract and that this Contract amount may be increased or decreased by additions and/or reductions in the Work as may be authorized and approved by the City, and the Contract amount may be decreased by the City's assessment of any damages against the Contractor, as may be provided for in this Contractor or by law, and the City retains the right of setoff as to any amounts of money the Contractor may owe the City. However, Contractor further acknowledges and agrees that any request for Contractor to perform Work under this Contract is in the sole discretion of the City and that there is no guarantee of any minimum amount of Work that may be requested by the City and that no Work may be requested.

SECTION 3. TERM OF CONTRACT NOT USED.

SECTION 4. TIME OF PERFORMANCE.

The Contractor shall commence the Work to be performed under this Contract on such date as is established and fixed for such commencement by written notice (which may be initially given verbally in an emergency situation) to proceed given by the City representative to the Contractor, and the Contractor covenants and agrees to fully construct, perform, and complete the Work and/or provide the goods called for by this Contract established by such notice. The Contractor further agrees that the Work shall be started promptly upon receipt of such notice and shall be prosecuted regularly, diligently, and uninterruptedly at a rate of progress that will ensure full completion thereof in the shortest length of time consistent with the Contract Documents and that Contractor will cooperate and coordinate with the other City contractors or employees doing other work or using the area where Contractor is working. The Contractor has 14 days to complete the demolition phase of the project. The City and the Contractor will agree upon a date to place the items listed in Exhibit 6 (Chiller Drawings).

SECTION 5. PAYMENT.

A. The City and Contractor agree that the City will only pay the Contractor for time actually spent and materials actually provided on the Project requested and accepted by the City. Invoices for services rendered and accepted shall be submitted by Contractor directly to the payment address of the requesting City department/division. Payment of such invoices shall be the responsibility of the department/division.

B. The City agrees to pay Contractor for the Contractor's complete and satisfactory performance of the Work, in the manner and at the time set out in this Contract. The City retains the right to setoff as to any amounts of money Contractor may owe the City. A written progress report may be requested by the City to accompany payment request and, if so, such progress report shall detail the work completed. Also, sufficient documentation of all costs, expenses, materials supplies, and/or hours worked may be requested by the City and, if so, may be required prior to the processing of any such request for payment. Payment will only be made for work actually performed, services actually supplied, and/or materials or goods furnished to the City,

all of which need to be approved and accepted by the City prior to such payment, unless otherwise provided for in the Contract documents. Once a payment request has been received the City, the City will process such payment request. If there are any objections or problems with the payment request, the City will notify the Contractor of such matters. If the payment request is approved and accepted by the City, payment will be made by the City to the Contractor not more than 30 days after such request has been approved.

C. The services the Contractor may be requested to provide the City are those items set forth in Exhibit 2 (Scope of Work) and/or Exhibit 3 (Bid Form), which list of services may be amended by the mutual agreement of the parties. The prices to be paid to the Contractor for such services provided to and accepted by the City under the provisions of this Contract shall be the current price(s) as set forth in Exhibit 3 (Bid Form). Unless otherwise stated in this Contract, the price(s) shall include all applicable charges such as pick up, delivery, printing, packaging, shipping, and other charges.

SECTION 6. SALES TAX EXEMPTION.

The City is exempt from payment of State Sales and Use Tax on all tangible personal property purchased or leased for the City's use or consumption. The Virginia Sales and Use Tax Certificate of Exemption number is 217-074292-9.

SECTION 7. FREE ON BOARD, RISK OF LOSS, AND TITLE.

All prices include F.O.B Destination, inside delivery, unless otherwise noted in this Contract. The risk of loss from any casualty, regardless of cause, shall be on the Contractor until the items have been delivered to City personnel making the request and accepted by the City. The risk of loss shall also be on the Contractor during the return of any items to the Contractor. Title to the items shall pass to the City upon receipt and acceptance of such items by the City.

SECTION 8. INSPECTION.

The City shall have a reasonable time after receipt of items and before payment to inspect all items for conformity to this Contract. If all or some of the items delivered to the City do not fully conform to the provisions hereof, the City shall have the right to reject and return such nonconforming items, at the sole cost of the Contractor.

SECTION 9. WARRANTY OF MATERIAL AND WORKMANSHIP.

Contractor agrees that all items provided to the City will be new, or if an item is refurbished or remanufactured, such item will meet the industry standards for such item and the item shall be clearly labeled as refurbished or remanufactured, and that all such items include such warranties as may be provided by Virginia law together with any warranties provided by the manufacturer of the item. Contractor shall use reasonable commercial efforts to assist the City in processing warranty claims against a manufacturer. Contractor also agrees that the services provided under this Contract shall be completed in a professional, good and workmanlike manner, with the degree of skill and care that is required by like contractors in Virginia. Further, Contractor warrants that such services shall be completed in accordance with the applicable requirements of this Contract and shall be correct and appropriate for the purposes contemplated in this Contract. Contractor agrees that Contractor shall repair or replace, at Contractor's sole expense, and to the satisfaction of the City, any items, material,

equipment, or part of the item that is found by the City to be defective or not in accordance with the terms of this Contract.

SECTION 10. PAYMENTS TO OTHERS BY CONTRACTOR.

The Contractor agrees that Contractor will comply with the requirements of Section 2.2-4354 of the Virginia Code regarding Contractor's payment to other entities and the Contractor will take one of the two actions permitted therein within 7 days after receipt of amounts paid to Contractor by the City. Contractor further agrees that the Contractor shall indemnify and hold the City harmless for any lawful claims resulting from the failure of the Contractor to make prompt payments to all persons supplying the Contractor equipment, labor, tools, or material in connection with the work provided for in the Contract. In the event of such claims, the City may, in the City's sole discretion, after providing written notice to the Contractor, withhold from any payment request or final payment the unpaid sum of money deemed sufficient to pay all appropriate claims and associated costs in connection with the Contract and make such payment, if the City determines it to be appropriate to do so.

SECTION 11. HOLD HARMLESS AND INDEMNITY.

Contractor shall indemnify and hold harmless the City and its officers, agents, and employees against any and all liability, losses, damages, claims, causes of action, suits of any nature, costs, and expenses, including reasonable attorney's fees, resulting from or arising out of Contractor's or its employees, agents, or subcontractors actions, activities, or omissions, negligent or otherwise, on or near City's property or arising in any way out of or resulting from any of the work or items to be provided under this Contract, and this includes, without limitation, any fines or penalties, violations of federal, state, or local laws or regulations, personal injury, wrongful death, or property damage claims or suits. Contractor agrees to and shall protect, indemnify, and hold harmless all the parties referred to above from any and all demands for fees, claims, suits, actions, causes of action, settlement or judgments based on the alleged or actual infringement or violation of any copyright, trademark, patent, invention, article, arrangement, or other apparatus that may be used in the performance of this Contract.

SECTION 12. COMPLIANCE WITH LAWS AND REGULATIONS, AND IMMIGRATION LAW.

Contractor agrees to and will comply with all applicable federal, state, and local laws, ordinances, and regulations, including, but not limited to all applicable licensing requirements, environmental regulations, and OSHA regulations. Contractor further agrees that Contractor does not and shall not during the performance of its Contract; knowingly employ an unauthorized alien as defined in the Federal Immigration Reform & Control Act of 1986.

SECTION 13. INDEPENDENT CONTRACTOR.

The relationship between Contractor and the City is a contractual relationship. It is not intended in any way to create a legal agency or employment relationship. Contractor shall, at all times, maintain its status as an independent contractor and both parties acknowledge that neither is an agent, partner or employee of the other for any purpose. Contractor shall be responsible for causing all required insurance, workers' compensation (regardless of number of employees) and unemployment insurance to be provided for all of its employees and subcontractors. Contractor will be responsible for all actions of any of its subcontractors, and that they are properly licensed.

SECTION 14. REPORTS, RECORDS, AND AUDIT.

Contractor agrees to maintain all books, records, electronic data, and other documents relating to this Contract for a period of five (5) years after the end of each fiscal year included in this Contract. The City, its authorized employees, agents, representatives, and/or state auditors shall have full access to and the right to request, examine, copy, and/or audit any such materials during the term of the Contract and such retention period, upon prior written notice to Contractor. This includes the City's right to audit and/or examine any of the Contractor's documents and/or data as the City deems appropriate to protect the City's interests.

SECTION 15. INSURANCE REQUIREMENTS.

Contractor and any of its subcontractors involved in this Contract shall maintain the insurance coverage's set forth in Exhibit 1 to this Contract and provide the proof of such insurance coverage as called for in Exhibit 1, including workers' compensation coverage regardless of the number of Contractor's employees. Such insurance coverage shall be obtained at the Contractor's sole expense and maintained during the life of the Contract and shall be effective prior to the beginning of any work or other performance by the Contractor under this Contract. Additional insured endorsements, if required, must be received by the City within 30 days of the execution of this Contract or as otherwise required by the City's Risk Manager.

SECTION 16. DEFAULT.

If Contractor fails or refuses to perform any of the terms of this Contract, including poor services, work or materials, the City may, by written notice to Contractor, terminate this Contract in whole or in part. In addition to any right to terminate, the City may enforce any remedy available at law or in equity in connection with such default, and Contractor shall be liable for any damages to the City resulting from Contractor's default. The City further reserves the right to immediately obtain such work or services from other entities in the event of Contractor's default.

SECTION 17. NONWAIVER.

Contractor agrees that the City's waiver or failure to enforce or require performance of any term or condition of this Contract or the City's waiver of any particular breach of this Contract by the Contractor extends to that instance only. Such waiver or failure is not and shall not be a waiver of any of the terms or conditions of this Contract or a waiver of any other breaches of the Contract by the Contractor and does not bar the City from requiring the Contractor to comply with all the terms and conditions of the Contract and does not bar the City from asserting any and all rights and/or remedies it has or might have against the Contractor under this Contract or by law.

SECTION 18. FORUM SELECTION AND CHOICE OF LAW.

This Contract shall be governed by, and construed in accordance with, the laws of the Commonwealth of Virginia, without application of Virginia's conflict of law provisions. Venue for any litigation, suits, and claims arising from or connected with this Contract shall only be proper in the Roanoke City Circuit Court, or in the Roanoke City General District Court if the amount in controversy is within the jurisdictional limit of such court, and all parties to this Contract voluntarily submit themselves to the jurisdiction and venue of such courts, regardless of the actual location of such parties. The provisions of this Contract shall not be construed in favor of or against either party, but shall be construed according to their fair meaning as if both parties jointly prepared this Contract.

SECTION 19. SEVERABILITY.

If any provision of this Contract, or the application of any provision hereof to a particular entity or circumstance, shall be held to be invalid or unenforceable by a court of competent jurisdiction, the remaining provisions of this Contract shall not be affected and all other terms and conditions of this Contract shall be valid and enforceable to the fullest extent permitted by law.

SECTION 20. NONDISCRIMINATION.

A. During the performance of this Contract, Contractor agrees as follows:

   i. Contractor will not discriminate against any employee or applicant for employment because of race, religion, color, sex, national origin, age, disability, or any other basis prohibited by state law relating to discrimination in employment, except where there is a bona fide occupational qualification reasonably necessary to the normal operation of the Contractor. Contractor agrees to post in conspicuous places, available to employees and applicants for employment, notices setting forth the provisions of this nondiscrimination clause.

   ii. Contractor in all solicitations or advertisements for employees placed by or on behalf of Contractor will state that Contractor is an equal opportunity employer.

   iii. Notices, advertisements and solicitations placed in accordance with federal law, rule or regulation shall be deemed sufficient for the purpose of meeting the requirements of this section.

B. Contractor will include the provisions of the foregoing Section A (i, ii, and iii) in every subcontract or purchase order of over $10,000, so that the provisions will be binding upon each subcontractor or vendor.

SECTION 21. DRUG-FREE WORKPLACE.

A. During the performance of this Contract, Contractor agrees to (i) provide a drug-free workplace for Contractor's employees; (ii) post in conspicuous places, available to employees and applicants for employment, a statement notifying employees that the unlawful manufacture, sale, distribution, dispensation, possession, or use of a controlled substance or marijuana is prohibited in the workplace and specifying the actions that will be taken against employees for violations of such prohibition; (iii) state in all solicitations or advertisements for employees placed by or on behalf of Contractor that Contractor maintains a drug-free workplace; and (iv) include the provisions of the foregoing clauses in every subcontract or purchase order of over $10,000, so that the provisions will be binding upon each subcontractor or vendor.

A. For the purposes of this section, "drug-free workplace" means a site for the performance of work done in connection with a specific contract awarded to a contractor, the employees of whom are prohibited from engaging in the unlawful manufacture, sale, distribution, dispensation, possession or use of any controlled substance or marijuana during the performance of the contract.

SECTION 22. FAITH BASED ORGANIZATIONS.

Pursuant to Virginia Code Section 2.2-4343.1, be advised that the City does not discriminate against faith-based organizations.

SECTION 23. ASSIGNMENT.

Contractor may not assign or transfer this Contract in whole or in part except with the prior written consent of the City, which consent shall not be unreasonably withheld. If consent to assign is given, no such assignment shall in any way release or relieve the Contractor from any of the covenants or undertakings contained in this Contract and the Contractor shall remain liable for the Contract during the entire term thereof.

SECTION 24. CONTRACTUAL DISPUTES.

Contractual claims, whether for money or for other relief, shall be submitted, in writing, no later than sixty (60) days after the earlier of the final payment or termination of the Contract or notice from the City to the Contractor that the City disputes the amount of Contractor's request for final payment. However, written notice of the Contractor's intention to file such claim must be given at the time of the occurrence or beginning of the work upon which the claim is based. Such notice is a condition precedent to the assertion of any such claim by the Contractor. A written decision upon any such claims will be made by the City Manager or the City Manager's designee (hereafter City Manager) within thirty (30) days after submittal of the claim and any practically available additional supporting evidence required by the City Manager. The Contractor may not institute legal action prior to receipt of the City's decision on the claim unless the City Manager fails to render such decision within 120 days from submittal of Contractor's claim. The decision of the City Manager shall be final and conclusive unless the Contractor within six (6) months of the date of the final decision on a claim or from expiration of the 120 day time limit, whichever occurs first, initiates legal action as provided in Section 2.2 - 4364, of the Va. Code. Failure of the City to render a decision within said 120 days shall not result in the Contractor being awarded the relief claimed nor shall it result in any other relief or penalty. The sole result of the City's failure to render a decision within said 120 days shall be Contractor's right to immediately institute legal action. No administrative appeals procedure pursuant to Section 2.2 - 4365 of the Va. Code has been established for contractual claims under this Contract.

SECTION 25. SUCCESSORS AND ASSIGNS.

The terms, conditions, provisions, and undertakings of this Contract shall be binding upon and inure to the benefit of each of the parties hereto and their respective successors and assigns.

SECTION 26. HEADINGS.

The captions and headings in this Contract are for convenience and reference purposes only and shall not affect in any way the meaning and interpretation of this Contract.

SECTION 27. COUNTERPART COPIES.

This Contract may be executed in any number of counterpart copies, each of which shall be deemed an original, but all of which together shall constitute a single instrument.

SECTION 28. AUTHORITY TO SIGN.

The persons who have executed this Contract represent and warrant that they are duly authorized to execute this Contract on behalf of the party for whom they are signing.

SECTION 29. NOTICES.

All notices must be given in writing and shall be validly given if sent by certified mail, return receipt requested, or by a nationally recognized overnight courier, with a receipt, addressed as follows (or any other address that the party to be notified may have designated to the sender by like notice):

To City:	City of Roanoke Department of General Services Facilities Management 1802 Courtland Avenue, Room 108 Roanoke, Virginia 24014
Facsimile:	(540) 853-5657
Copy to:	City of Roanoke Purchasing Division Attn: Purchasing Manager Noel C. Taylor Municipal Building, Room 202 215 Church Avenue, SW Roanoke, Virginia 24011
Facsimile:	(540) 853-1513
Phone:	(540) 853-2871
Email:	purchasing.contracts@roanokeva.gov
If to Contractor:	_____ Attn: _____, President/CEO _____ _____
Email Address:	_____
Phone:	_____

Notices shall be deemed to be effective one day after sending if sent by overnight courier or three (3) days after sending it by certified mail, return receipt requested.

SECTION 30. PROTECTING PERSONS AND PROPERTY.

The Contractor expressly undertakes both directly and through its subcontractors, to take every reasonable precaution at all times for the protection of all persons and property at the location of the Work or in the vicinity of the Work or that may be affected by the Contractor's operation in connection with the Work. The Contractor will maintain adequate protection of all Contractor's Work to prevent damage to it and shall protect the City's property from any injury or loss arising in connection with this Contract and to protect adjacent property to prevent any damage to it or loss of use and enjoyment by its owners. Contractor agrees to be responsible for the entire Work and will be liable for all damages to the Work, including, but not limited to, damages to any property of the City or to any property in the vicinity or adjacent to the Work. All damage with respect to the Work caused by vandalism, weather, or any other cause, other than resulting from the sole negligence of the City shall be the responsibility of the Contractor. Contractor shall also be responsible for any inventory shortages and discrepancies of any type.

SECTION 31. CONTRACT SUBJECT TO FUNDING.

This Contract is subject to funding and/or appropriations from federal, state, and/or local governments and/or agencies. If any such funding is not provided, withdrawn, or otherwise not made available for this Contract, the Contractor agrees that the City may terminate this Contract on seven (7) days written notice to Contractor, without any penalty or damages being incurred by the City. Contractor further agrees to comply with any applicable requirements of any grants and/or agreements providing such funding.

SECTION 32. SUSPENSION OR TERMINATION OF CONTRACT BY CITY.

The City, at any time, may order Contractor to immediately stop work on this Contract, and/or by seven days (7) written notice may terminate this Contract, with or without cause, in whole or in part, at any time. Upon receipt of such notice, the Contractor shall immediately discontinue all services affected (unless the notice directs otherwise), and deliver to the City all data (including electronic data), drawings, specifications, reports, project deliverables, estimates, summaries, and such other information and materials as may have been accumulated by the Contractor in performing this Contract whether completed or in process (unless otherwise directed by the notice).

1. If the termination or stop work order is due to the failure of the Contractor to fulfill any of its Contract obligations, the City may take over the Work and prosecute the same to completion by contract or otherwise. In such case, the Contractor shall be liable to the City for any damages allowed by law, and upon demand of City shall promptly pay the same to City.
2. Should the Contract be terminated or work is stopped not due in any way to the fault of the Contractor, the Contractor shall only be entitled to compensation for services actually performed and materials actually supplied prior to notice of termination or to stop work and which are approved by the City and any applicable federal or state approving agency. No profit, overhead, or any other costs of any type are allowed after the date of such notice of termination or stop work order.
3. The rights and remedies of the City provided in this Section are in addition to any other rights and remedies provided by law or under this Contract and City may pursue any and all such rights and remedies against Contractor as it deems appropriate.

SECTION 33. ETHICS IN PUBLIC CONTRACTING.

The provisions, requirements, and prohibitions as contained in Sections 2.2–4367 through 2.2-4377, of the Va. Code, pertaining to bidders, offerors, contractors, and subcontractors are applicable to this Contract.

SECTION 34. COMPLIANCE WITH STATE LAW; FOREIGN AND DOMESTIC BUSINESSES AUTHORIZED TO TRANSACT BUSINESS IN THE COMMONWEALTH OF VIRGINIA.

Contractor shall comply with the provisions of Virginia Code Section 2.2-4311.2, as amended, which provides that a contractor organized as a stock or nonstock corporation, limited liability company, business trust, or limited partnership or registered as a registered limited liability partnership shall be authorized to transact business in the Commonwealth as a domestic or foreign business entity if so required by Title 13.1 or Title 50 or as otherwise required by law. Contractor shall not allow its existence to lapse or its certificate of authority or registration to transact business in the

Commonwealth, if so required under Title 13.1 or Title 50, to be revoked or cancelled at any time during the term of the Contract. The City may void the Contract if the Contractor fails to remain in compliance with the provisions of this section.

SECTION 35. OWNERSHIP OF REPORTS AND DOCUMENTS.

Contractor agrees that all reports and any other documents (including electronic data) prepared for, obtained in connection with, and/or required to be produced in connection with this Contract shall be delivered by the Contractor to the City and all such items shall become the sole property of the City. The Contractor agrees that the City shall own all rights of any type in and to all such items, including but not limited to copyrights and trademarks, and the City may reproduce, copy, and use all such items as the City deems appropriate, without any restriction or limitation on their use and without any cost or charges to the City from Contractor. Contractor hereby transfers and assigns all such rights and items to the City. Contractor further agrees Contractor will take any action and execute any documents necessary to accomplish the provisions of this Section. The Contractor also warrants that Contractor has good title to all materials, equipment, documents, and supplies which it uses in the Work or for which it accepts payment in whole or in part.

SECTION 36. JOBSITE APPEARANCE.

The Contractor expressly undertakes, either directly or through its subcontractor(s), to clean up frequently all refuse, rubbish, scrap material, and debris caused by its operations, to the end that at all times the jobsite shall present a neat, orderly, and workmanlike appearance. No such refuse, rubbish, scrap material, and debris shall be left within the completed Work nor buried on site, but shall be properly protected and removed from the site and properly disposed of in a licensed landfill or otherwise as required by law or as otherwise required by the Contract.

SECTION 37. FINAL CLEANING.

The Contractor expressly undertakes, either directly or through its subcontractor(s), before final payment, to remove all surplus material, false work, temporary structures, and debris of every nature resulting from its operations and to put the site in a neat, orderly condition. If a Contractor fails to clean up at the completion of the Project, the City may do so and charge for the costs thereof to the Contractor.

SECTION 38, PROTECTION ON SITE.

The Contractor expressly undertakes, both directly and through its subcontractor, to take every reasonable precaution at all times for the protection of all persons and property which may come on the jobsite or be affected by the Contractor's operation in connection with the Work.

SECTION 39. SAFETY AND HEALTH PRECAUTIONS.

The Contractor shall be solely responsible for initiating, maintaining, and supervising all safety and health precautions and programs in connection with the Work, including but not limited to provision of appropriate sanitation facilities, if applicable.

SECTION 40. PROTECTING THE PUBLIC.

The Contractor shall in all cases protect the public and the Work, during its execution, by posting and maintaining, at its expense, appropriate signs, barricades, barriers, lights, flagmen, and other safety devices in accordance with the most current version of the "Virginia Work Area Protection Manual," published by Virginia Department of Transportation.

SECTION 41. PROTECTING THE WORK AND ADJACENT PROPERTY.

The Contractor shall continuously maintain adequate protection of all its work from damage and shall protect the City's property and the property where the work is being done from injury or loss arising in connection with this Contract. The Contractor shall adequately protect adjacent property to prevent any damage to it or its loss of use. Contractor shall provide and maintain all passageways, guard fences, lights, and other facilities for protection required by any public authority, local conditions, any of the Contract Documents, or erected for the fulfillment of its obligations for the protection of persons and property.

SECTION 42. EMERGENCIES.

In an emergency affecting the safety or life of persons or of the Work, or of the adjoining property, the Contractor, without special instruction or authorization from the City's project manager, City Engineer, Building Code Official, or Fire Official, shall act, at Contractor's discretion, to prevent such threatened loss or injury. Also, should Contractor, to prevent threatened loss or injury, be instructed or authorized to act by the City's project manager, City Engineer, Building Code Official, Fire Official, or other responsible official, Contractor shall so act immediately, without appeal.

SECTION 43. DAMAGE TO THE WORK.

The Contractor shall have charge of and be solely responsible for the entire Work and be liable for all damages to the Work including, but not limited to any property in the vicinity of the Work, until its completion and acceptance by the City.

SECTION 44. DAMAGE TO OTHER WORK OR UTILITIES.

The Contractor shall take into account all other work which shall be done by other parties on the jobsite, either now known or which may become necessary during the progress of the Work, and shall be responsible for any damage done to the other work. Should any utilities require adjustment during the Work, it shall be the Contractor's responsibility to have such utilities relocated as a part of the Work and to contact and cooperate with the respective Utility Company in performance of such operations. The respective Utility Company shall be given a minimum of forty-eight (48) hours' notice prior to the adjustment, and the Contractor shall comply with the provisions of the Virginia Underground Utilities Damage Prevention Act, Section 56-265.14 et seq., of the Va. Code. Damages that may occur to the utilities during the Work shall be the sole responsibility of the Contractor.

SECTION 45. WEATHER DAMAGE OR DELAY.

Damage to the Work or any delays caused by the weather shall be the responsibility of the Contractor.

.

SECTION 46. DAMAGE TO EXISTING STRUCTURES.

Damage caused by Contractor or its subcontractors to concrete curbs, gutters, sidewalks, or any existing facility, structure, or building that may occur during the Work shall be repaired or replaced by the Contractor, at its sole expense, as directed by and to the satisfaction of the City

SECTION 47. RELEASE BY CONTRACTOR.

The acceptance by the Contractor of the final payment shall be and does operate as a release by the Contractor of all claims by the Contractor against City and of all other liability of the City to the Contractor whatever, including liability for all things done or furnished in connection with the Work or the Contract.

SECTION 48. DEFECTIVE WORK.

The Contractor agrees it shall repair or replace, at Contractor's sole expense, and to the satisfaction of the City, any work, material, equipment, or part that is found, by the City, to be defective.

SECTION 49. ENTIRE CONTRACT.

This Contract, including any attachments, exhibits, and referenced documents, constitutes the complete understanding between the parties. This Contract may be modified only by written agreement properly executed by the parties.

SIGNATURE PAGE TO FOLLOW.

IN WITNESS WHEREOF, the parties hereto have signed this Contract by their authorized representatives.

WITNESS: (**Full Legal Name of Contractor**)

_____ By_____

_____ _____
Printed Name and Title Printed Name and Title

(SEAL)

CITY OF ROANOKE, VIRGINIA

WITNESS:

_____ By_____
City Manager or Authorized City Representative

_____ _____
Printed Name and Title Printed Name and Title

Approved as to form:

Appropriation and Funds Required
for this Contract Certified:

_____ _____
City Attorney Director of Finance

Account #_____

CT _____

Approved as to Execution:

Date_____

_____
City Attorney

EXHIBIT 1
TO CONTRACT
BETWEEN CITY OF ROANOKE AND
FOR CRANE & RIGGING SERVICES FOR DEMOLITION AND PLACEMENT OF PIPING AND EQUIPMENT

REFERENCE: ITB# 16-07-16

SAMPLE CONTRACTOR'S INSURANCE REQUIREMENTS

INSURANCE REQUIREMENTS SECTION

The Contractor shall comply with the insurance requirements set forth in the Contract, including the items set forth below:

A. Neither the Contractor nor any subcontractor shall commence work under this Contract until the Contractor has obtained and provided proof of the required insurance coverages to the City, and such proof has been approved by the City. The Contractor confirms to the City that all subcontractors have provided Contractor with proof of such insurance, or will do so prior to commencing any work under this Contract.

B. Contractor, including all subcontractors, shall, at its and/or their sole expense, obtain and maintain during the life of this Contract the insurance policies and/or coverages required by this section. The City and its officers, employees, agents, assigns, and volunteers shall be added as an additional insured to the general liability and automobile coverages of any such policies and such insurance coverages shall be primary and noncontributory to any insurance and/or self-insurance such additional insureds may have. The Contractor shall immediately notify in writing the City of any changes, modifications, and/or termination of any insurance coverages and/or policies required by this Contract. The Contractor shall provide to the City with the signed Contract an Acord certificate of insurance which states in the description of operations section one of the two paragraphs below:

(1) The City and its officers, employees, agents, assigns, and volunteers are additional insureds as coverage under this policy includes ISO endorsement CG 20 33 which provides that the insured status of such entities is automatic if required by a contract or a written agreement. (If additional insured status is automatic under a different coverage form, Contractor must attach a copy of the coverage form to its certificate. Any required insurance policies shall be effective prior to the beginning of any work or other performance by Contractor and any subcontractors under this Contract).

OR

(2) ISO endorsement CG 20 10 will be issued, prior to the beginning of any work or other performance by Contractor under this Contract, to the City and its officers, employees, agents, assigns, and volunteers naming them as an additional insured under the general liability coverage. (A copy of the binder confirming the issuance must be attached to the certificate. Any required insurance policies shall be effective prior to the beginning of any work or other performance by Contractor and any subcontractors under this Contract).

However, if B (1) or (2) cannot be provided, the City's Risk Manager, in such Manager's sole discretion, may approve such other certificate of insurance or insurance document(s) that the Risk Manager deems acceptable. The City of Roanoke shall also be named as the Certificate Holder.

C. The minimum insurance policies and/or coverages that shall be provided by the Contractor, including its subcontractors, include the following:

(1) Commercial General Liability: $1,000,000.00

$1,000,000.00 General Aggregate Limit (other than Products/Completed Operations).

$1,000,000.00 Products/Completed Operations Aggregate Limit.

$1,000,000.00 Personal Injury Liability (including liability for slander, libel, and defamation of character).

$1,000,000.00 each occurrence limit

(2) Automobile Liability: $1,000,000.00 combined single limit with applicable endorsement to cover waste cargo, if transporting hazardous materials.

(3) Workers' Compensation and Employer's Liability:

Workers' Compensation: statutory coverage for Virginia

Employer's Liability:

$100,000.00 Bodily Injury by Accident each occurrence

$500,000.00 Bodily Injury by Disease Policy Limit.

$100,000.00 Bodily Injury by Disease each employee.

(3A) Rigger's Liability:

$1,000,000 and Care, Custody and Control of Customer's Property with a limit equal to the value of the equipment

(4) The required limits of insurance for this Contract may be achieved by combining underlying primary coverage with an umbrella liability coverage to apply in excess of the general and automobile liability policies, provided that such umbrella liability policy follows the form of the underlying primary coverage.

(5) Such insurance policies and/or coverages shall provide for coverage against any and all claims and demands made by a person or persons or any other entity for property damages or bodily or personal injury (including death) incurred in connection with the services, work, items, and/or other matters to be provided under this Contract with respect to the commercial general liability coverages and the automobile liability coverages. With respect to the workers' compensation coverage, Contractor's and its

subcontractors' insurance company shall waive rights of subrogation against the City and its officers, employees, agents, assigns, and volunteers.

(6) Contractor shall provide such other insurance policies and/or coverages that may be required by other parts of this Contract. If required by the Contract, such policies and/or coverages could include, but are not limited to, Errors and Omissions/Professional Liability, Crime/ Fidelity, Environmental and/or Pollution, Builder's Risk, Umbrella/Excess.

D. Proof of Insurance Coverage:

(1) Contractor shall furnish the City with the above required certificates of insurance showing the type, amount, effective dates, and date of expiration of the policies.

(2) Where waiver of subrogation is required with respect to any policy of insurance required under this Section, such waiver shall be specified on the certificate of insurance.

E. Insurance coverage shall be in a form and with an insurance company approved by the City, which approval shall not be unreasonably withheld. Any insurance company providing coverage under this Contract shall be authorized to do business in the Commonwealth of Virginia.

F. The Contractor's insurance policies and/or coverages shall not contain any exclusions for the Contractor's subcontractors.

G. The continued maintenance of the insurance policies and coverages required by the Contract is a continuing obligation, and the lapse and/or termination of any such policies or coverages without approved replacement policies and/or coverages being obtained shall be grounds for termination of the Contractor for default.

H. Nothing contained in the insurance requirements is to be construed as limiting the liability of the Contractor, and/or its subcontractors, or their insurance carriers. The City does not in any way represent that the coverages or the limits of insurance specified are sufficient or adequate to protect the Contractor's interest or liabilities, but are merely minimums. The obligation of the Contractor, and its subcontractors, to purchase insurance shall not in any way limit the obligations of the Contractor in the event that the City or any of those named above should suffer any injury or loss in excess of the amount actually recoverable through insurance. Furthermore, there is no requirement or obligation for the City to seek any recovery against the Contractor's insurance company before seeking recovery directly from the Contractor.

END

EXHIBIT 2
TO CONTRACT
BETWEEN CITY OF ROANOKE AND
FOR CRANE & RIGGING SERVICES FOR DEMOLITION AND PLACEMENT OF PIPING AND EQUIPMENT

REFERENCE: ITB# 16-07-16

SCOPE OF WORK

The following are the services and/or items that the Successful Bidder will be required to provide and such services are to be included in the bids.

The services, work, and/or items that the Contractor shall provide in a timely and proper manner in accordance with the Contract include, but are not necessarily limited to, the following:

Primary Bid:

A. Work will take place at the Berglund Center, 710 Williamson RD NE, Roanoke, VA 24016.
B. Demolition and rigging of the items listed in Exhibit 4 (Chiller Room Demo Drawing) and Exhibit 5 (Brine Room Demo Drawing) will occur in the brine room and involves the removal of three compressors and associated components highlighted in the room drawings as well as the rigging (setting in place) of two chillers and associated components.
C. Chillers to be set in place have dimensions of 145.5” length, 68.2” width, and 76.1” height with a shipping weight of 16,187 lbs.
D. All work shall be completed within 14 days and no later than 21 days after award.
E. Work may be completed during Berglund Center events and hours of operation without disruptions.
F. Contractor shall be at the site at time of delivery to unload chillers from the manufacturer’s delivery truck.
G. Contractor shall dispose of all removed equipment and components.
H. Final installation of components will be completed by the City of Roanoke.

Alternate Bid:

B. Contractor shall provide Qualified Riggers on an as requested basis to assist City Employees in the installation and support of associated work to the primary project.

EXHIBIT 3
TO CONTRACT
BETWEEN CITY OF ROANOKE AND
FOR CRANE & RIGGING SERVICES FOR DEMOLITION AND PLACEMENT OF PIPING AND EQUIPMENT REFERENCE: ITB# 16-07-16

BID FORM

TO BE ADDED TO FINAL CONTRACT

EXHIBIT 4
TO CONTRACT
BETWEEN CITY OF ROANOKE AND
FOR CRANE & RIGGING SERVICES FOR DEMOLITION AND PLACEMENT OF PIPING AND EQUIPMENT

REFERENCE: ITB# 16-07-16

CHILLER ROOM DEMO DRAWING

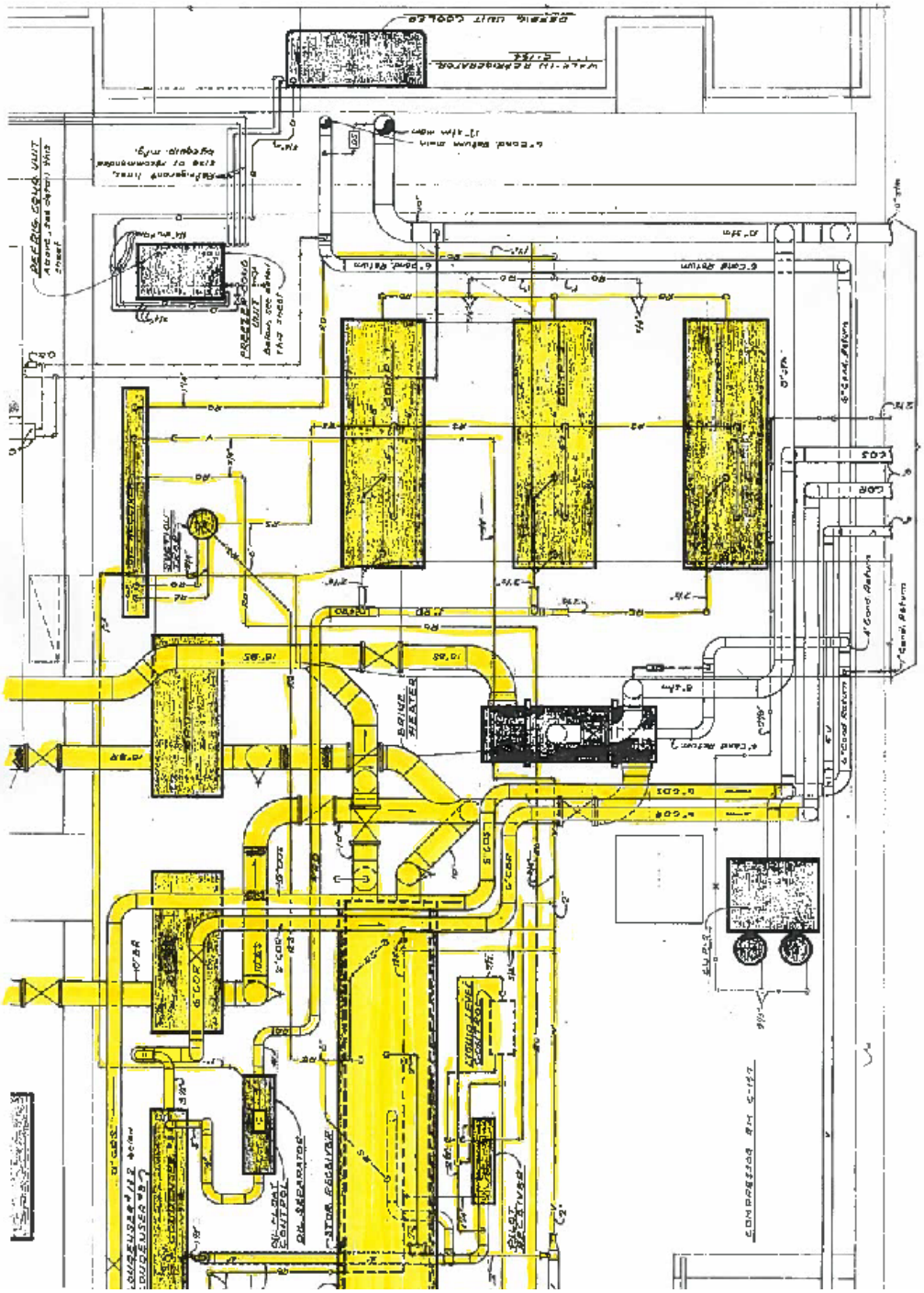
BRINE HEATER
OIL SEPARATOR
OIL FLOAT CONTROL
ATOM. REGULATOR
CONDENSER #1
CONDENSER #2
COMPRESSOR #1
COMPRESSOR #2
6" Cond. Return
4" Cond. Return
Cond. Return

EXHIBIT 5
TO CONTRACT
BETWEEN CITY OF ROANOKE AND
FOR CRANE & RIGGING SERVICES FOR DEMOLITION AND PLACEMENT OF PIPING AND EQUIPMENT

REFERENCE: ITB# 16-07-16

BRINE ROOM DEMO DRAWING

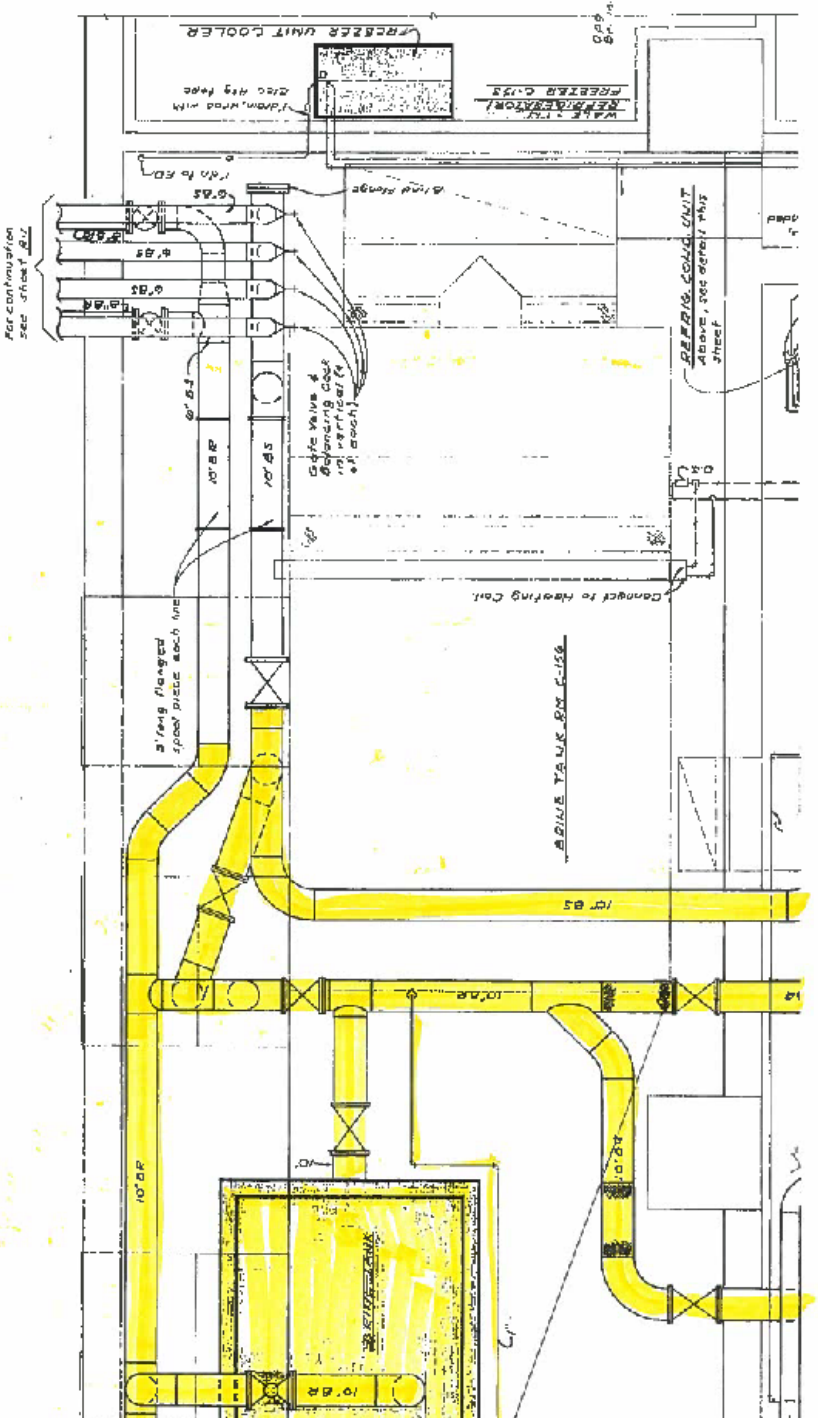
FREEZER UNIT COOLER
REFRIGERATORS
FREEZER C-173
Gate valve & flanging each in vertical at each
Connect to Heating Coil
BRINE TANK BY C-156
10" GS
10" GR
10" GR
10" GR

EXHIBIT 6
TO CONTRACT
BETWEEN CITY OF ROANOKE AND
FOR CRANE & RIGGING SERVICES FOR DEMOLITION AND PLACEMENT OF PIPING AND EQUIPMENT

REFERENCE: ITB# 16-07-16

CHILLER DIAGRAM

Weight, Clearance & Rigging Diagram - Water-Cooled Optimus (TM)
Item: A1 Qty: 2 Tag(s): ICH-1, ICH-2

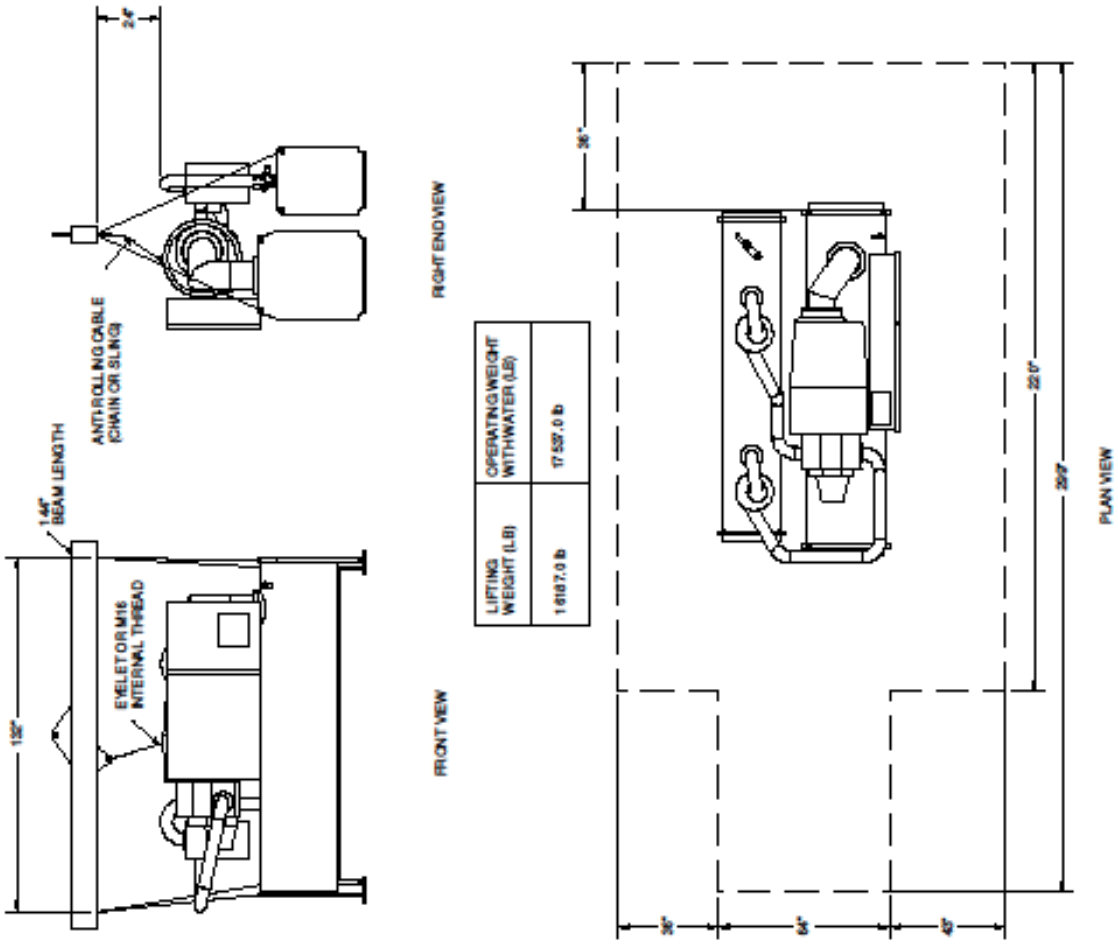

LIFTING WEIGHT (LB)	OPERATING WEIGHT WITH WATER (LB)
16187.0 lb	17537.0 lb

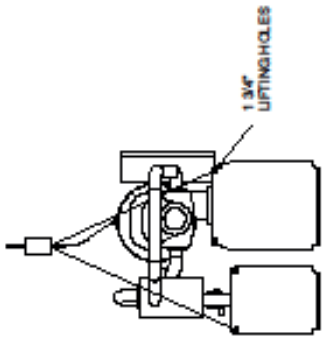

NOTES:
1. DO NOT USE CABLES (CHAINS OR SLINGS) EXCEPT AS SHOWN. OTHER LIFTING ARRANGEMENTS MAY CAUSE EQUIPMENT DAMAGE OR SERIOUS PERSONAL INJURY.
2. EACH OF THE CABLES (CHAINS OR SLINGS) USED TO LIFT UNIT MUST BE CAPABLE OF SUPPORTING THE ENTIRE WEIGHT OF THE UNIT.
3. LIFTING CABLES (CHAINS OR SLINGS) MAY NOT BE THE SAME LENGTH. ADJUST AS NECESSARY FOR EVEN LEVEL LIFT.
4. ADJUST AS NECESSARY USING SINGLE POINT LIFT, TO PREVENT UNIT FROM ROLLING, ATTACH CABLE (CHAIN OR SLING) WITHOUT ANY TENSION AS SHOWN.
5. DO NOT USE FORKLIFT TO MOVE OR LIFT UNIT.
6. IF UNIT IS DISASSEMBLED, SEE SERVICE BULLETIN RTHC SB-2 FOR LIFTING AND RIGGING OF COMPONENTS.

NOTE:
ALLOW 36" OF CLEARANCE ABOVE THE STARTER ELECTRICAL CONNECTION DOOR.

EXHIBIT 7
TO CONTRACT
BETWEEN CITY OF ROANOKE AND
FOR CRANE & RIGGING SERVICES FOR DEMOLITION AND PLACEMENT OF PIPING AND EQUIPMENT

REFERENCE: ITB# 16-07-16

EQUIPMENT DRAWING

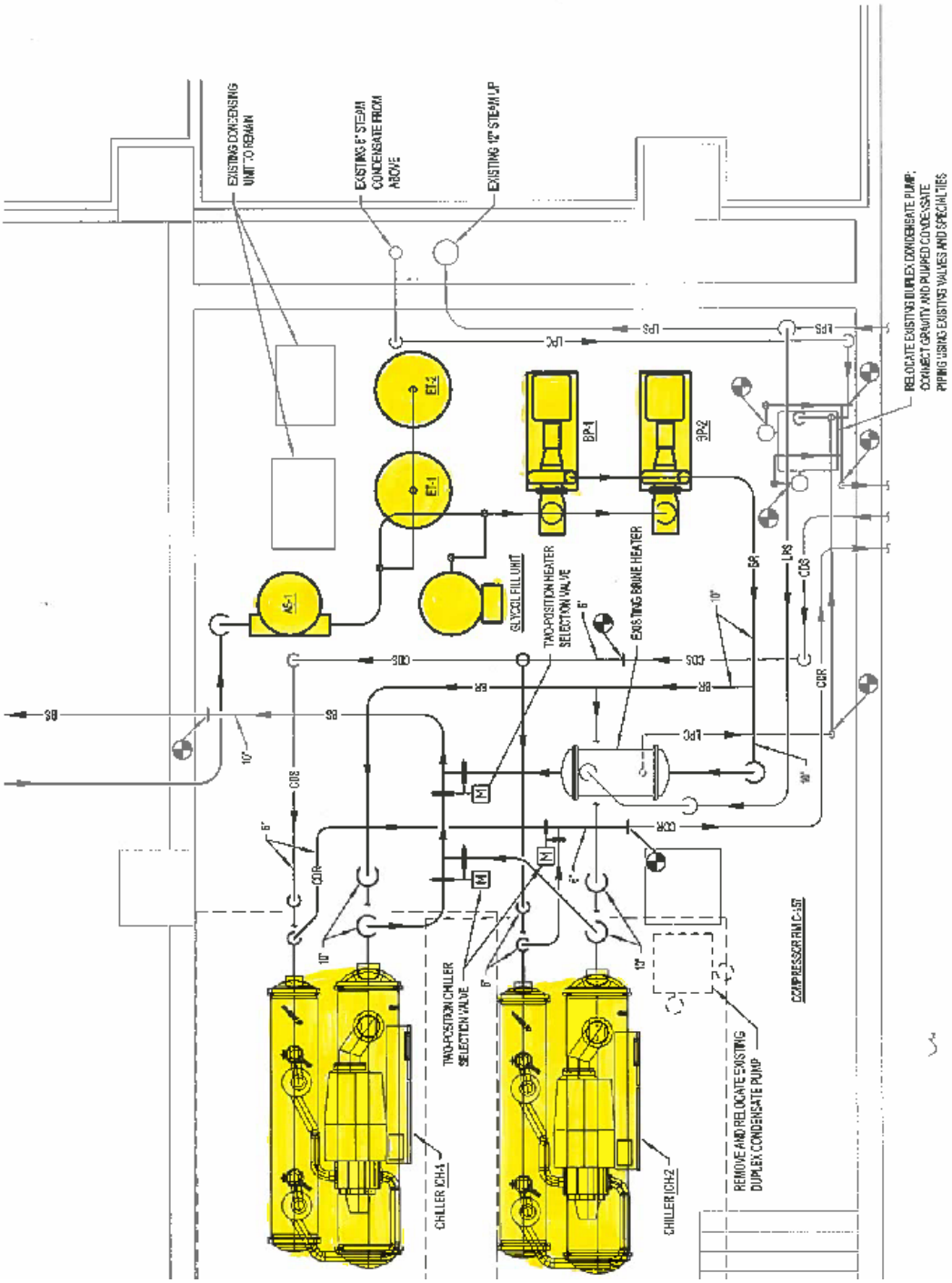

FLOOR PLAN - COMPRESSOR ROOM & BRINE TANK ROOM