PROJECT LOCATION MAP

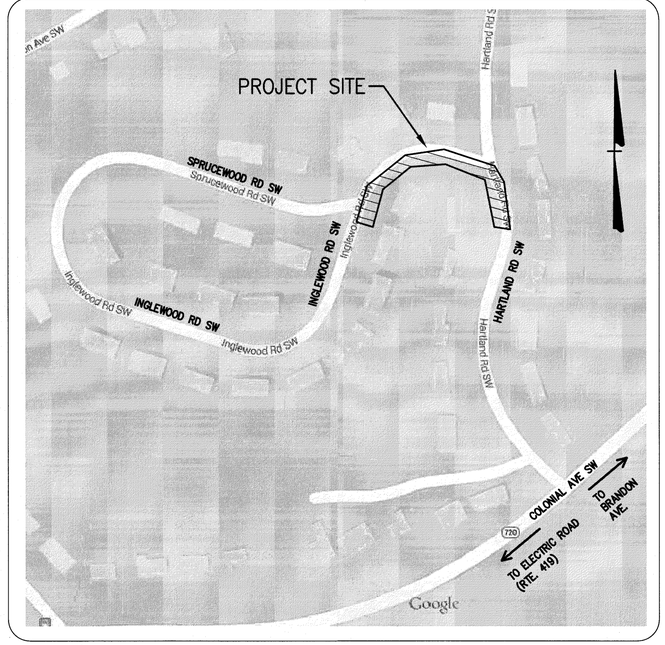

ROANOKE

DEPARTMENT OF PUBLIC WORKS
STORMWATER DIVISION
1802 COURTLAND ROAD, NE
ROANOKE, VIRGINIA 24012
PHONE: (540) 853-5900
FAX: (540) 853-1270

INDEX OF SHEETS

1 TITLE SHEET
2 EXISTING CONDITIONS AND DEMOLITION
3 PLAN AND PROFILE
4 PROFILE
5 DETAILS
6 EROSION AND SEDIMENT CONTROL PLAN
7 EROSION & SEDIMENT CONTROL AND STORMWATER QUALITY DETAILS

HARTLAND / INGLEWOOD RD, SW / STORMWATER DRAINAGE IMPROVEMENTS PROJECT

CONSULTING ENGINEERS

Mattern & Craig
ENGINEERS•SURVEYORS
701 FIRST STREET, S.W.
ROANOKE, VIRGINIA 24016
PHONE: (540) 345-9342
FAX: (540) 345-7691
CONTACT: WILLIAM THOMAS AUSTIN, P.E.
E-MAIL: wtaustin@matternandcraig.com

COMMISSION NUMBER: 3464

COMMONWEALTH OF VIRGINIA
WM. THOMAS AUSTIN
Lic. No. 030907
08/12/15
PROFESSIONAL ENGINEER

PROJECT NAME

STORMWATER DRAINAGE IMPROVEMENTS PROJECT
HARTLAND/INGLEWOOD RD, SW

CITY STORMWATER PLAN NUMBER: 5903

CITY PLANNING NUMBER: N/A

REVISION BY	DESCRIPTION:	DATE

APPROVED FOR CONSTRUCTION

Dwayne Ardenne STORMWATER MANAGER	8/20/2015 DATE
Robert K. Bengtson DIRECTOR OF PUBLIC WORKS	9/9/15 DATE
Sherman M. Stovall ASSISTANT CITY MANAGER - OPERATIONS	9/9/15 DATE

ADVERTISED DATE: _____

SET NUMBER: _____

SHEET NUMBER: 1 OF 7

R:\Dwgs\3464\Dwg\Rke_City\Site 13\3464_SITE 13_sheets.dwg, 8/13/2015 3:47:24 PM, arb

EXISTING SANITARY AND STORM SEWER STRUCURES:

S-1 Sanitary Sewer Manhole
Top of Rim = 1123.79'
Inv. In 8" = 1117.21'
Inv. Out 8" = 1116.50'

S-2 Sanitary Sewer Manhole
Top of Rim = 1105.16'
Inv. In 8" = 1097.68'
Inv. Out 8" = 1097.51'

S-3 Sanitary Sewer Manhole
Top of Rim = 1095.09'
Inv. In 8" = 1087.42' (From S-1)
Inv. In 8" = 1087.57' (From S-2)
Inv. Out 8" = 1087.17'

S-4 Sanitary Sewer Manhole
Top of Rim = 1084.99'
Inv. In 8" = 1077.61'
Inv. Out 8" = 1077.24'

S-5 Sanitary Sewer Manhole
Top of Rim = 1068.41'
Inv. In 4" Lat = 1061.08' (From CO)
Inv. In 4" Lat = 1060.99'
Inv. In 8" = 1060.76' (From S-4)
Inv. Out 8" = 1060.40'

S-6 Sanitary Sewer Manhole
Top of Rim = 1059.06'
Inv. In 8" = 1052.67'
Inv. Out 8" = 1052.55'

S-7 Sanitary Sewer Manhole
Top of Rim = 1059.97'
Inv. In 8" = 1053.72'
Inv. In 8" = 1051.46' (From S-6)
Inv. Out 8" = 1051.17'

D-1 Drop Inlet
Top of Rim = 1091.96'
Inv. Out 15" RCP = 1087.41'

D-2 Storm Drain Manhole
Top of Rim = 1084.29'
Inv. In 15" RCP = 1080.08'
Inv. Out 15" RCP = 1079.59'

D-3 Storm Drain Manhole
Top of Rim = 1069.23'
Inv. In 15" RCP = 1064.60'
Inv. Out 18" RCP = 1064.23'

D-4 Storm Drain Manhole
Top of Rim = 1058.57'
Inv. In 4" Tera = 1056.30' (From D-5)
Inv. In 18" RCP = 1055.08' (From D-3)
Inv. In 15" RCP = 1055.13' (From D-6)
Inv. Out 18" RCP = 1054.83'

D-5 Catch Basin
Top of Grate = 1058.17'
Inv. Out 4" Tera = 1057.20'

D-6 Steel Drop Inlet
Top of Grate = 1058.67'
Inv. Out 15" RCP = 1056.23'

D-7 Steel Drop Inlet
Top of Grate = 1058.68'
Inv. In 18" RCP = 1054.62'
Inv. Out 18" RCP = 1053.94'

D-8 End Of Pipe
Inv. Out 18" RCP = 1027.32'

GENERAL NOTES (DEMOLITION AND REMOVAL):

1. THIS PARTIAL TOPOGRAPHIC SURVEY FOR THE HARTLAND ROAD SW DRAINAGE IMPROVEMENTS PROJECT FOR THE CITY OF ROANOKE WAS COMPLETED BY MATTERN & CRAIG, INC. UNDER THE DIRECT AND RESPONSIBLE CHARGE OF TIMOTHY W. CALDWELL, L.S. FROM AN ACTUAL GROUND SURVEY MADE UNDER MY SUPERVISION; THAT THE IMAGERY AND/OR ORIGINAL DATA WAS OBTAINED ON FEBRUARY 4 & 5, 2015; AND THAT THIS PLAT, MAP, OR DIGITAL GEOSPATIAL DATA INCLUDING METADATA MEETS MINIMUM ACCURACY STANDARDS UNLESS OTHERWISE NOTED.
2. WHERE INDICATED OR WHERE IN CONFLICT WITH NEW CONSTRUCTION, EXISTING TOPOGRAPHICAL AND PLANIMETRIC FEATURES (ASPHALT PAVEMENT, CONCRETE PAVEMENT AND SIDEWALK, CURB, CURB AND GUTTER, LIGHT POLES, LANDSCAPING FEATURES AND SITE APPURTENANCES) WITHIN DEMOLITION BOUNDARY ARE TO BE REMOVED.
3. THE LOCATION OF EXISTING UTILITIES, INCLUDING UNDERGROUND UTILITIES, ARE INDICATED ON THE DRAWINGS INSOFAR AS THEIR EXISTENCE AND LOCATION WERE KNOWN AT THE TIME OF THE PREPARATION OF THE DRAWINGS. UNDERGROUND UTILITIES SHOWN HEREON ARE BASED ON THE SURVEYED LOCATION OF FIELD MARKINGS PERFORMED BY OTHERS OR TAKEN FROM "AS-BUILT" DRAWINGS PROVIDED BY OWNER. HOWEVER, NOTHING IN THESE CONTRACT DOCUMENTS SHALL BE CONSTRUED AS A GUARANTEE THAT SUCH UTILITIES ARE IN THE LOCATION INDICATED OR THAT THEY ACTUALLY EXIST, OR THAT OTHER UTILITIES ARE NOT WITHIN THE AREA OF OPERATIONS. THE CONTRACTOR SHALL MAKE ALL NECESSARY INVESTIGATIONS TO DETERMINE THE EXISTENCE AND LOCATIONS OF SUCH UTILITIES. THE CONTRACTOR IS RESPONSIBLE FOR MAINTENANCE AND PROTECTION OF EXISTING UTILITIES AND STRUCTURES DURING THE EXECUTION OF THE WORK.
4. ALL EXISTING UTILITIES ARE TO REMAIN IN PLACE AND ACTIVE UNLESS OTHERWISE NOTED. CONTRACTOR SHALL COORDINATE WITH UTILITY SERVICE COMPANY PRIOR TO PERFORMING DEMOLITION WORK.
5. THE CONTRACTOR SHALL CONTACT "MISS UTILITY" (CALL 811 OR 1-800-552-7001) 48 HOURS PRIOR TO WORKING IN THE VICINITY OF THE EXISTING UTILITIES. CONTRACTOR SHALL REFER TO THE VIRGINIA "UNDERGROUND UTILITY DAMAGE PREVENTION ACT" FOR ADDITIONAL INFORMATION AND REQUIREMENTS.
6. A PERMIT MUST BE OBTAINED FROM THE CITY OF ROANOKE PRIOR TO ANY CONSTRUCTION WITHIN THE VDOT RIGHT-OF-WAY.
7. PERIMETER EROSION AND SEDIMENT CONTROL MEASURES AS SHOWN AND SPECIFIED ON DRAWINGS 6 & 7 SHALL BE INSTALLED PRIOR TO DEMOLITION THAT RESULTS IN LAND DISTURBANCE.

KEYNOTES:

1. REMOVE ASPHALT PAVEMENT (SURFACE AND BINDER COURSE, AND AGGREGATE BASE) AND ASPHALT/CONCRETE CURB WHERE SHOWN, OR WHERE IN CONFLICT WITH NEW WORK. SAW-CUT WHERE ADJOINING PAVEMENT IS TO REMAIN.
2. TEMPORARILY RELOCATE EXISTING MAILBOXES IN ACCORDANCE WITH U.S. POST OFFICE GUIDE LINES. RESTORE UPON COMPLETION OF WORK.
3. SITE AMENITY FEATURE(S) (PLANTERS, ETC.) TO BE REMOVED WHERE SPECIFICALLY DENOTED OR WHERE WITHIN DEMOLITION LIMITS. SALVAGE AND DELIVER TO OWNER.
4. REMOVE TREES, SHRUBS, AND OTHER LANDSCAPE FEATURES WHERE IN CONFLICT WITH NEW WORK. REFER TO LANDSCAPE PLANS FOR ADDITIONAL INFORMATION.
5. REFER TO PROFILE ON SHEET 3 AND 4 FOR INFORMATION REGARDING DEMOLITION AND MODIFICATION TO EXISTING STORM DRAIN SYSTEM.
6. REMOVE EXISTING 15" SD PIPE BETWEEN EXISTING SD STRUCTURES D-4 AND D-6.

City of Roanoke– Construction Procedure Requirements:

1. Right-of-Way Excavation Permit – Prior to the commencement of any digging, alteration or construction within the public right-of-way (streets, alleys, public easements), a right-of-way excavation permit shall be applied for and obtained by the contractor from the City of Roanoke.
2. Land Disturbance Permit –An approved erosion and sediment control plan for any borrow/fill sites associated with the project must be submitted prior to the issuance of a land disturbance permit.
3. Plans and Permits – A copy of the plans as approved by the City (signed by the proper City officials) and all permits issued by the City shall be available at the construction site at all times of ongoing construction.
4. Location of Utilities – The contractor shall verify the location of all existing utilities prior to the commencement of any construction.
5. Construction Entrance – The contractor shall install an adequate construction entrance for all construction related egress from the site. Size and composition of construction entrance shall be as shown on the plans.
6. Streets to Remain Clean – It shall be the responsibility of the contractor to insure that the public street adjacent to the construction entrance remains free of mud, dirt, dust, and/or any type of construction materials or litter at all times.
7. Barricades/Ditches – The contractor shall maintain the integrity of all excavated ditches and shall furnish and ensure that all barricades proper and necessary for the safety of the public are in place.
8. Pavement Replacement – The replacement of pavement shall be in accordance with approved standards and specifications of the City of Roanoke.
9. Approved Plans/Construction Changes – Any change or variation from construction design as shown on the officially approved plans shall be approved by the erosion and sediment control agent prior to said changes or variation in construction being made.
10. Final Acceptance/City – The contractor shall furnish the City of Roanoke's Planning Building and Development Department with a field surveyed final correct set of as-built plans of the newly constructed storm drain and/or stormwater management facilities prior to final acceptance and issuance of a certificate of occupancy by the City. As-built plans shall be provided in the State Plane Virginia South Coordinate System, NAD 1983, FIPS 4502 Feet, US Survey Feet, Datum NA 83, in the form of 1 paper copy and 1 digital AUTOCAD file.

DEMOLITION LEGEND:

- REMOVE ASPHALT PAVEMENT [1]
- REMOVE UTILITIES / STORM DRAINAGE ITEMS [6]
- REMOVE SITE FEATURE
- LIMITS OF DEMOLITION AND REMOVAL

UTILITY OWNERS

ELECTRIC:
APPALACHIAN POWER
40 FRANKLIN ROAD SOUTHWEST
ROANOKE, VIRGINIA 24011
PHONE: 1-800-956-4237

GAS:
ROANOKE GAS
519 KIMBLE AVE. N. E.
ROANOKE, VIRGINIA 24030
PHONE: 1-540-938-3800

COMMUNICATIONS:
VERIZON
4843 OAKLAND BOULEVARD
ROANOKE, VIRGINIA 24012
PHONE: 1-434-942-8192

WATER AND SEWER:
WESTERN VIRGINIA WATER AUTHORITY
3322 HOLLINS RD. N.E.
ROANOKE, VIRGINIA, 24012
PHONE: 1-540-853-5641

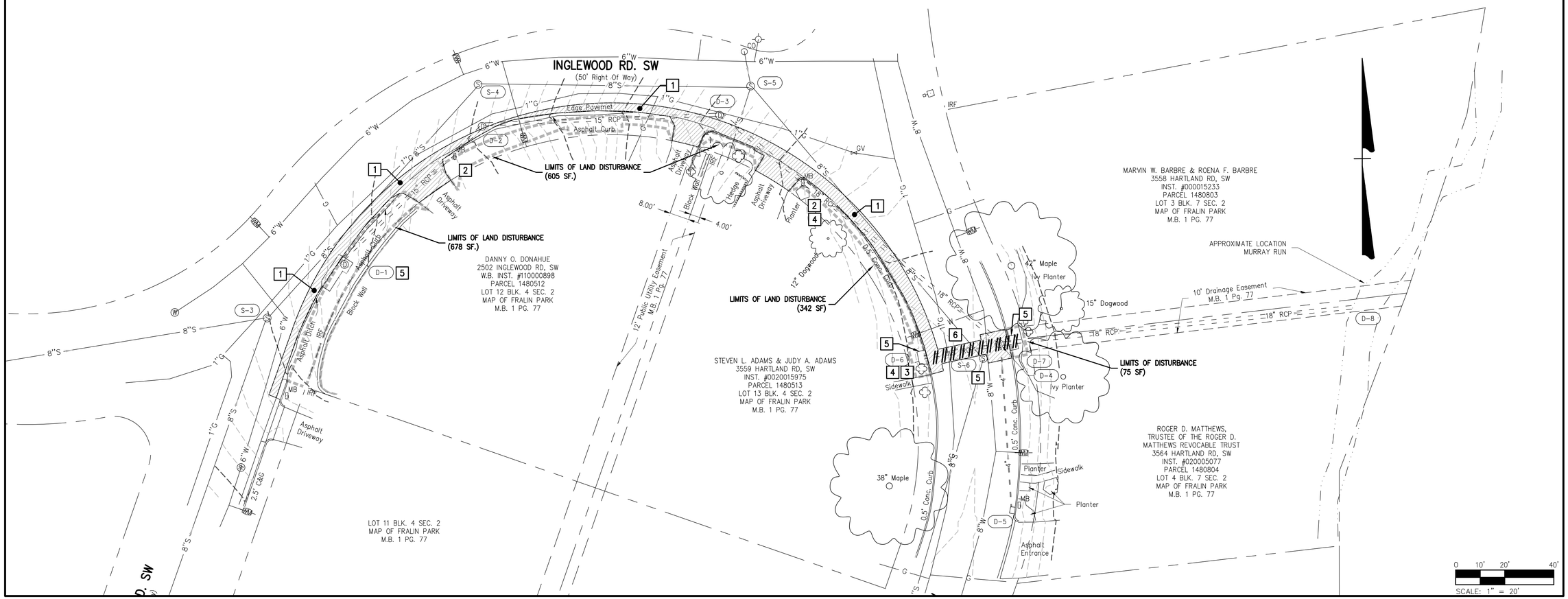

Mattern & Craig
ENGINEERS • SURVEYORS
701 FIRST STREET, S.W.
ROANOKE, VIRGINIA 24016
(540) 345-9342
FAX (540) 345-7691

STORMWATER DRAINAGE IMPROVEMENTS PROJECT
HARTLAND/INGLEWOOD RD, SW

EXISTING CONDITIONS AND DEMOLITION

ROANOKE, VIRGINIA

Revisions	Date

Issue Date: JULY 10, 2015
Drawn By: JEF
Designed By: WTA/JEF
Checked By: WTA
Date: 07/10/15

Vertical Scale: N/A
Horizontal Scale: 1" = 20'
Commission Number: 3464
Sheet No.: 2

R:\Dwgs\3464\Dwg\Rke_City\Site 13\3464_SITE 13_sheets.dwg, 8/13/2015 3:49:19 PM, arb

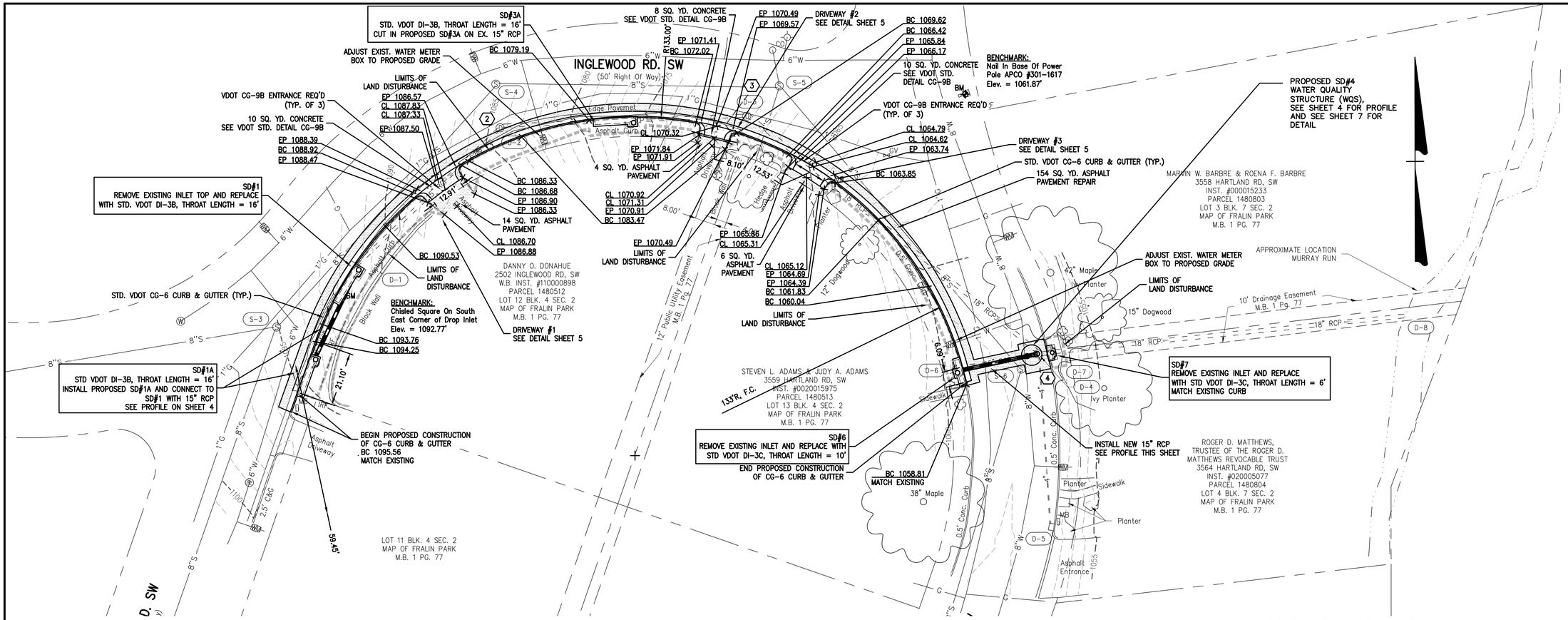

D-4 TO D-6 PROFILE

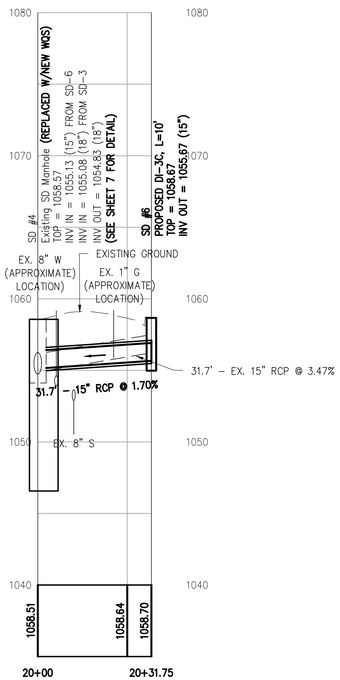

GENERAL NOTES (CONSTRUCTION):

1. DIMENSIONS SHOWN ARE TO FACE OF CURB.
2. SEE THIS SHEET AND PLAN SHEET 4 FOR PROPOSED STORM DRAIN PROFILE. PROFILES SHOW PROPOSED STORM DRAIN STRUCTURE RIM ELEVATION AND PIPE INVERTS
3. SEE PLAN SHEET 5 FOR DETAILS ON STORM DRAIN INSTALLATION.
4. PAVEMENT REPAIR SHALL BE PERFORMED IN ACCORDANCE WITH CITY OF ROANOKE AND VDOT REQUIREMENTS.
5. THE CONTRACTOR SHALL CONTACT "MISS UTILITY" (CALL 811 OR 1-800-552-7001) 48 HOURS PRIOR TO WORKING IN THE VICINITY OF THE EXISTING UTILITIES. CONTRACTOR SHALL REFER TO THE VIRGINIA "UNDERGROUND UTILITY DAMAGE PREVENTION ACT" FOR ADDITIONAL INFORMATION AND REQUIREMENTS.
6. A PERMIT MUST BE OBTAINED FROM THE CITY OF ROANOKE PRIOR TO ANY CONSTRUCTION WITHIN THE VDOT RIGHT-OF-WAY.
7. SEE PLAN SHEETS 6 & 7 FOR EROSION AND SEDIMENT CONTROL PLAN AND DETAILS.
8. MAINTAIN EXISITNG ROAD CROSS SLOPE WHEN INSTALLING PROPOSED CURB AND GUTTER.
9. SEE PLAN SHEET 5 FOR DRIVEWAY TYPICAL SECTION.
10. SEE PLAN SHEET 5 FOR CURB & GUTTER TYPICAL SECTIONS
11. ADJUST EXIST. WATER METER BOXES AND SEWER CLEANOUTS TO PROPOSED GRADE.
12. MAINTENANCE OF TRAFFIC SHALL CONFORM TO THE VIRGINIA WORK AREA PROTECTION MANUAL AND THE PROPER TYPICAL TRAFFIC CONTROL (TTC) AS REQUIRED FOR CONSTRUCTION. CONTRACTOR SHALL MAINTAIN TRAFFIC AT ALL TIMES.

STORM DRAINAGE GENERAL NOTES:

1. STORM DRAINAGE PIPE AND DRAINAGE STRUCTURES SHALL COMPLY WITH ALL APPLICABLE VDOT STANDARDS AND SPECIFICATIONS. REFER TO "INSTALLATION OF PIPE CULVERTS & STORM SEWER GENERAL NOTES" AND DETAILS SHOWN ON VDOT STD. PB-1 SHOWN HEREON FOR ADDITIONAL INFORMATION.
2. THE INVERT OF ALL NEW STORM DRAINAGE INLETS AND MANHOLES SHALL CONFORM TO VDOT STD. IS-1 – "STANDARD METHOD OF SHAPING MANHOLE AND INLET INVERTS". REFER TO DETAIL SHOWN ON SHEET 5.
3. STORM DRAIN PIPE LENGTHS SHOWN HEREON ARE APPROXIMATE HORIZONTAL DISTANCES FROM CENTER OF STRUCTURE TO CENTER OF STRUCTURE. PIPE SLOPES SHOWN ARE COMPUTED USING INVERT OUT AT UPSTREAM STRUCTURE, INVERT IN AT DOWNSTREAM STRUCTURE, AND HORIZONTAL PIPE LENGTH MEASURES FROM CENTER OF STRUCTURE TO CENTER OF STRUCTURE.
4. UPON COMPLETION OF THE STORM DRAINAGE SYSTEM, THE CONTRACTOR SHALL FURNISH TO THE CITY OF ROANOKE A FIELD SURVEYED FINAL SET OF AS-BUILT PLANS OF THE NEWLY CONSTRUCTED STORM DRAIN AND/OR STORM WATER MANAGEMENT FACILITIES. AS-BUILT PLANS SHALL BE PROVIDED IN THE STATE PLANE VIRGINIA SOUTH COORDINATE SYSTEM, NAD 1983, FIPS 4502 FEET, US SURVEY FEET, DATUM NA 83, IN THE FORM OF 1 PAPER COPY AND 1 DIGITAL AUTOCAD FILE.

LEGEND:

- NEW CONCRETE CURB & GUTTER (VDOT CG-6)
- NEW ASPHALT PAVEMENT (SEE DETAILS ON SHEET 5)
- NEW STORM DRAINAGE PIPE
- NEW CURB INLET

0 10' 20' 40'
SCALE: 1" = 20'

Mattern & Craig
ENGINEERS • SURVEYORS
701 FIRST STREET, S.W.
ROANOKE, VIRGINIA 24016
(540) 345-9342
FAX (540) 345-7691

COMMONWEALTH OF VIRGINIA
WM. THOMAS AUSTIN
Lic. No. 039907
PROFESSIONAL ENGINEER
08/12/15

Revisions	Date

Issue Date: JULY 10, 2015
Drawn By: JEF
Designed By: WTA/JEF
Checked By: WTA
Date: 07/10/15

STORMWATER DRAINAGE IMPROVEMENTS PROJECT
HARTLAND/INGLEWOOD RD, SW

PLAN AND PROFILE

ROANOKE, VIRGINIA

Vertical Scale: 1"= 5'
Horizontal Scale: 1" = 20'
Commission Number: 3464
Sheet No.: 3

R:\Dwgs\3464\Dwg\Rke_City\Site 13\3464_SITE 13_sheets.dwg, 8/13/2015 3:56:50 PM, arb

D-8 TO D-1A PROFILE

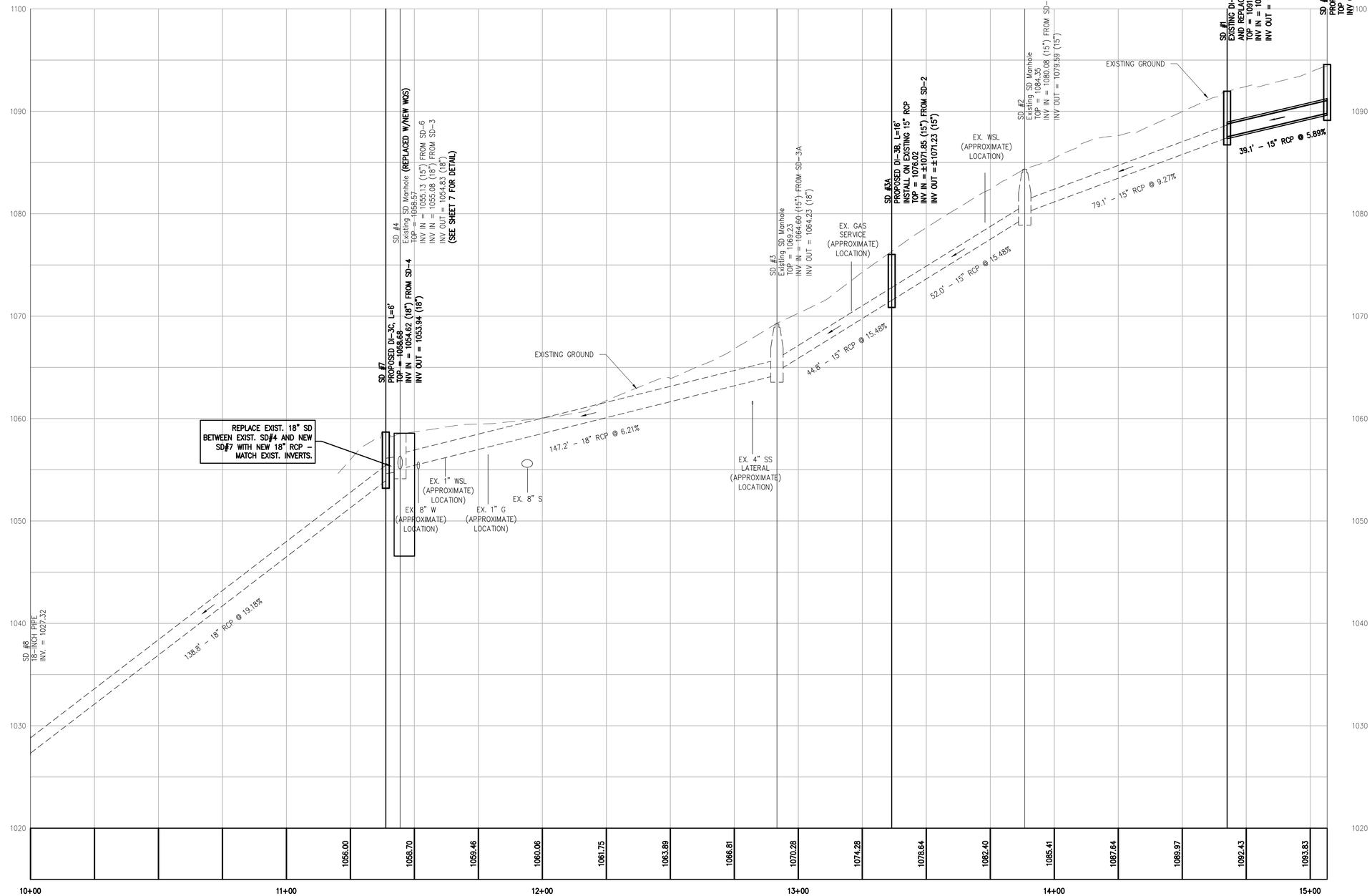

0 10' 20' 40'

SCALE: 1" = 20'

Mattern & Craig
ENGINEERS • SURVEYORS
701 FIRST STREET, S.W.
ROANOKE, VIRGINIA 24016
(540) 345-9342
FAX (540) 345-7691

COMMONWEALTH OF VIRGINIA
WM. THOMAS AUSTIN
Lic. No. 039907
PROFESSIONAL ENGINEER
08/12/15

Revisions	Date

Issue Date: JULY 10, 2015

Drawn By: JEF

Designed By: WTA/JEF

Checked By: WTA

Date: 07/10/15

STORMWATER DRAINAGE IMPROVEMENTS PROJECT
HARTLAND/INGLEWOOD RD, SW

PROFILE

ROANOKE, VIRGINIA

Vertical Scale: 1"= 5'

Horizontal Scale: 1" = 20'

Commission Number: 3464

Sheet No.: 4

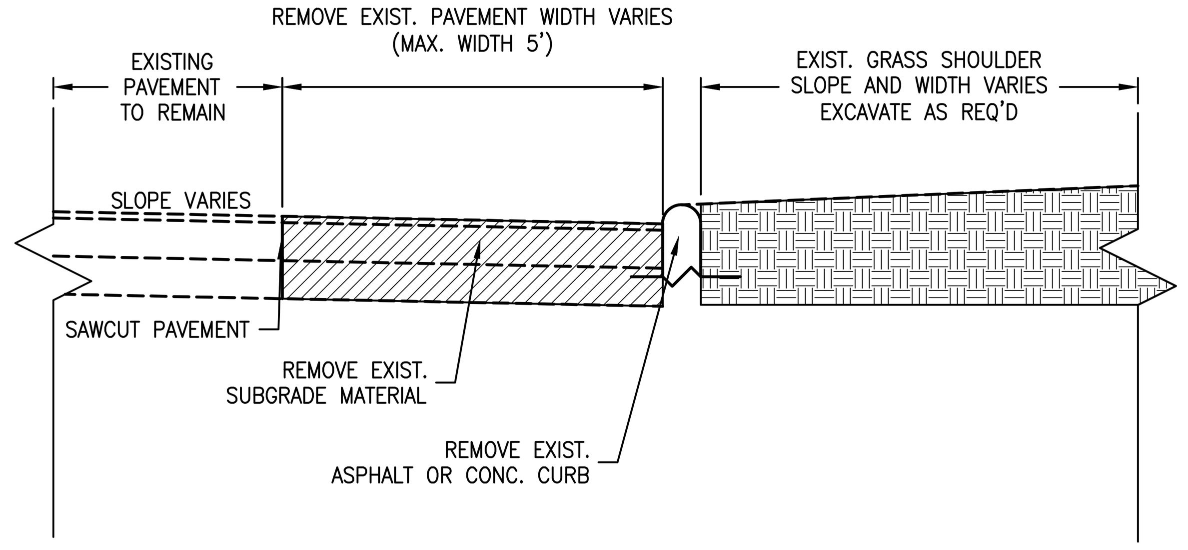

EXISTING CONDTIONS @ EDGE OF PAVEMENT/SHOULDER – INGLEWOOD RD SW/HARTLAND RD SW
SCALE: 1"=1'

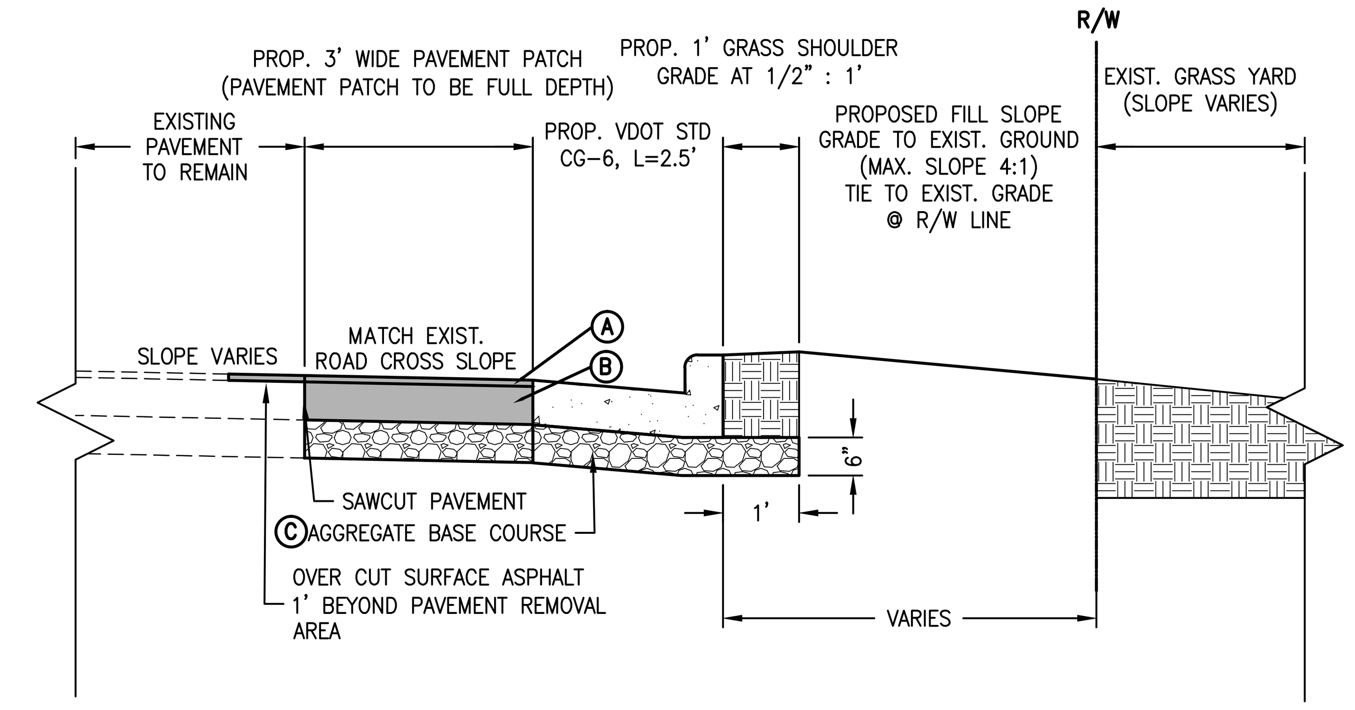

PROPOSED CONDTIONS – INGLEWOOD RD SW/HARTLAND RD SW
SD-1A TO DRIVEWAY #1
SCALE: 1"=1'

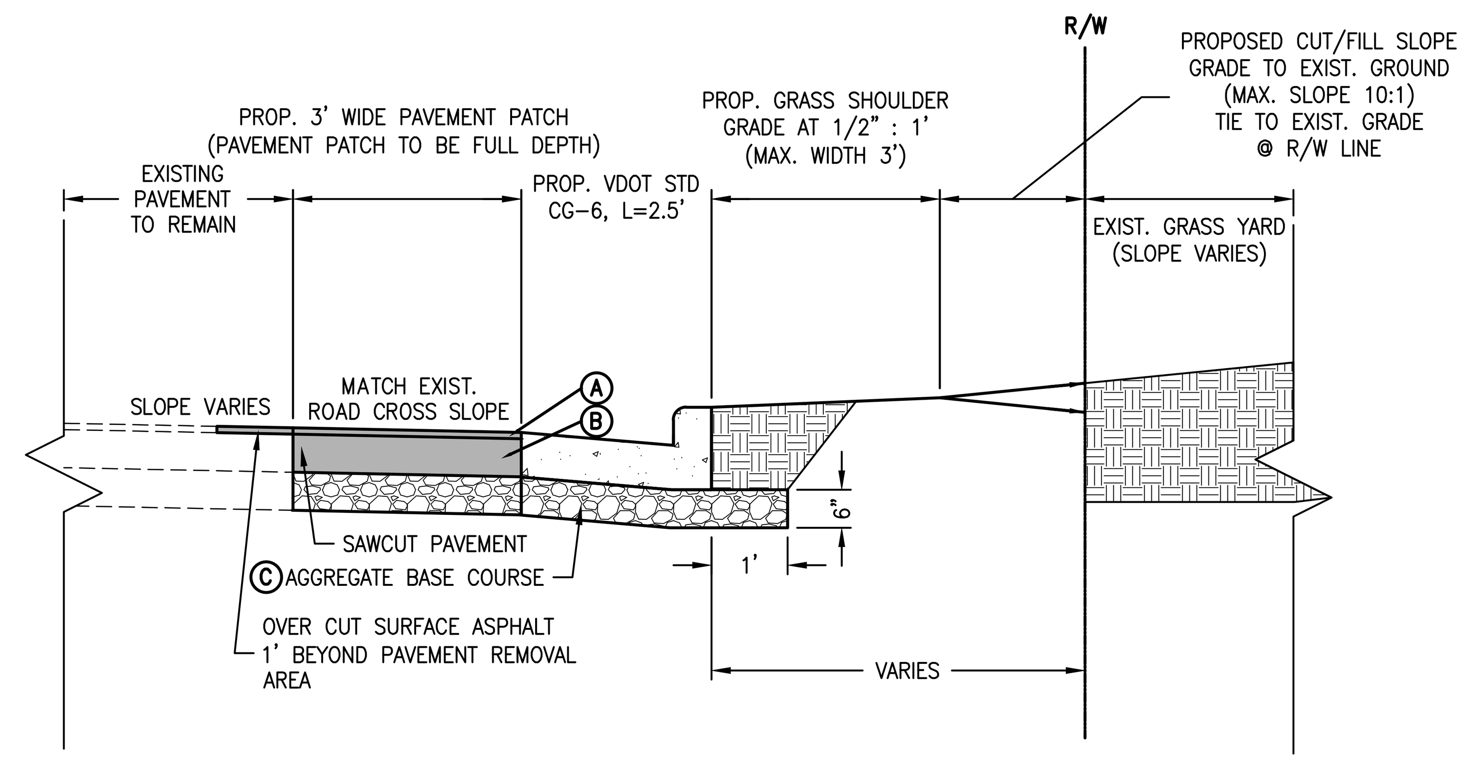

PROPOSED CONDTIONS – INGLEWOOD RD SW/HARTLAND RD SW
DRIVEWAY #1 TO SD-3A
SCALE: 1"=1'

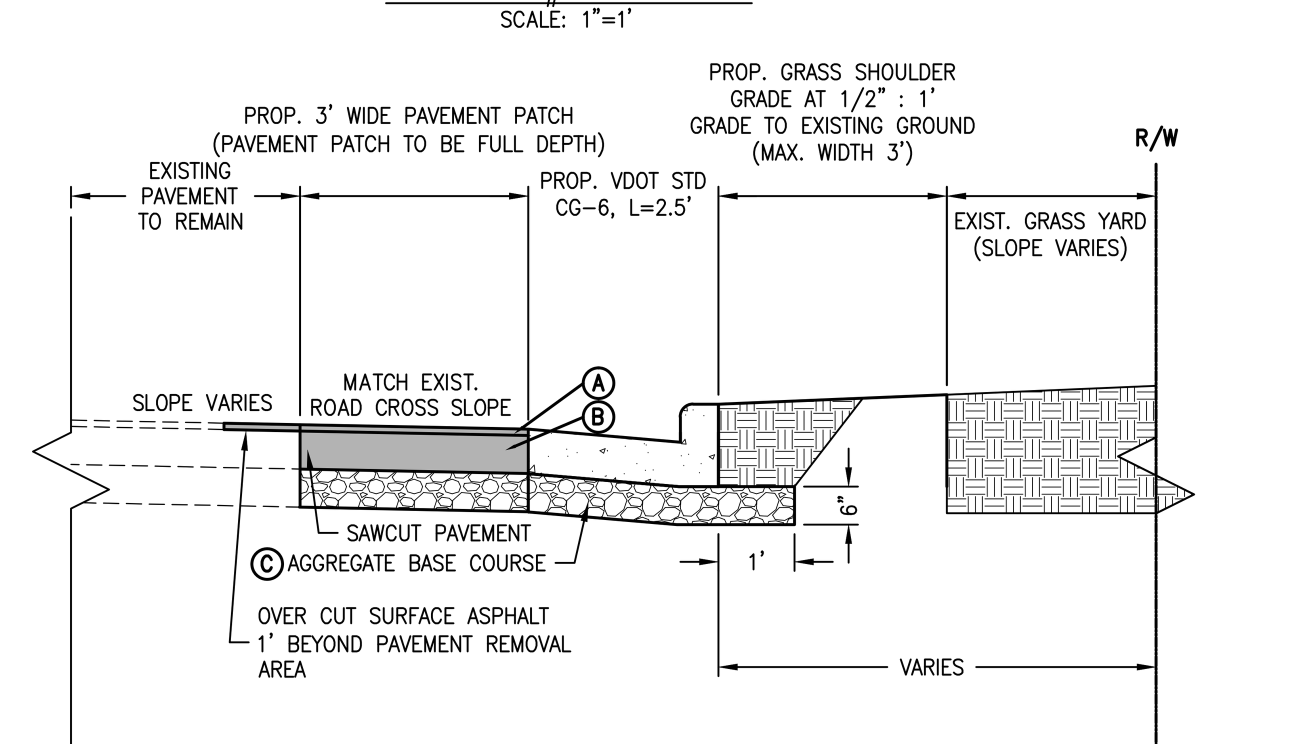

PROPOSED CONDTIONS – INGLEWOOD RD SW/HARTLAND RD SW
SD-3A TO SD-6
SCALE: 1"=1'

PROPOSED PAVEMENT/AGGREGATE DEPTHS FOR ROAD/CURB CROSS-SECTIONS ABOVE:

Ⓐ 1.5" ASPHALT CONCRETE SURFACE COURSE TYPE SM-9.5A @ 165 LBS/SY

Ⓑ 5.5" ASPHALT CONCRETE BASE COURSE TYPE BM-25.0

Ⓒ 6" AGGREGATE BASE MATERIAL NO.21A

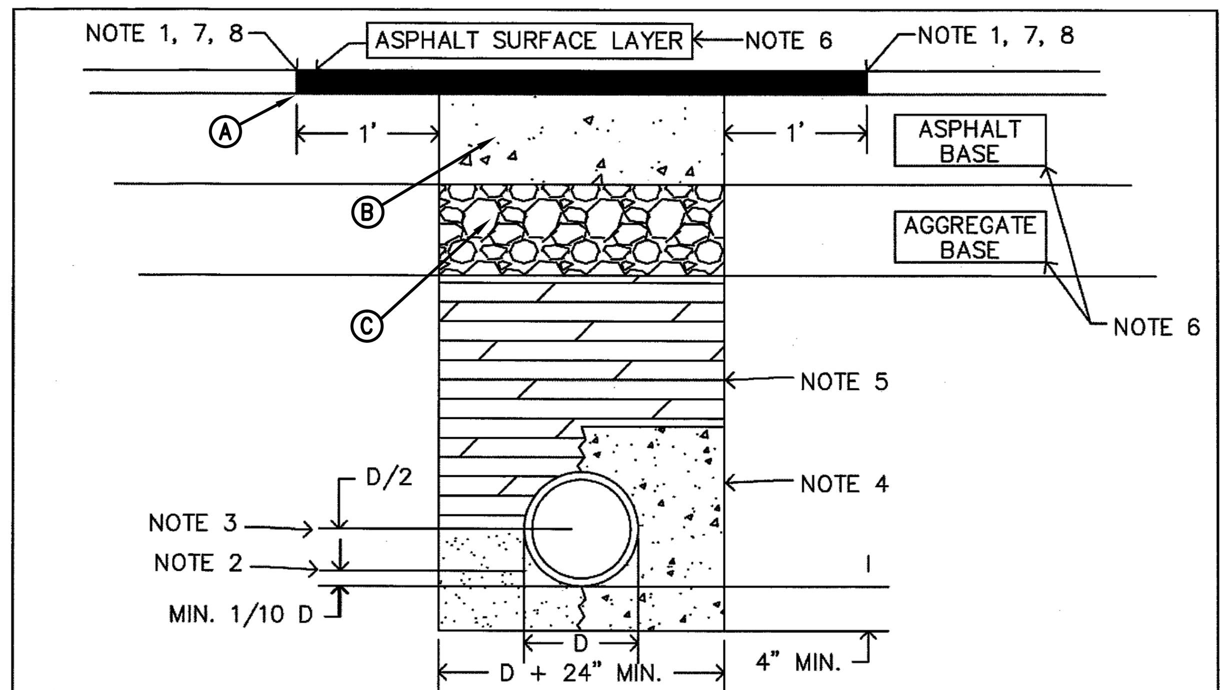

NOTES:

1. ALL PAVEMENTS SHALL BE SAW CUT WITH NEAT, UNIFORM LINES PRIOR TO EXCAVATION.
2. PIPE BEDDING MATERIAL SHALL BE CRUSHER RUN (VDOT NO. 25 OR 26) OR OPEN GRADED AGGREGATE (VDOT NO. 57, 68, 7, OR 8). ALTERNATE MATERIAL MUST BE APPROVED BY THE TRANSPORTATION DIVISION INSPECTOR.
3. MAXIMUM DEPTH OF PIPE BEDDING MATERIAL IF USING OPEN GRADED AGGREGATE FOR BEDDING.
4. OPTIONAL CONCRETE ENCASEMENT FOR POWER OR COMMUNICATION CONDUIT. PROVIDE A MINIMUM OF 4" CONCRETE COVER FROM ALL SIDES OF CONDUIT.
5. BACKFILL MATERIAL SHALL BE VDOT NO. 21A AGGREGATE OR FLOWABLE FILL.
   A. AGGREGATE SHALL BE PLACED IN LOOSE LIFTS NOT EXCEEDING 6", AND COMPACTED TO AT LEAST 95% MAXIMUM DRY DENSITY WITHIN 2 PERCENTAGE POINTS OF OPTIMUM MOISTURE (VTM-1) WITH THE USE OF MECHANICAL TAMPERS OR VIBRATORY ROLLERS. WATER COMPACTION IS NOT PERMITTED. LOCAL MATERIAL CLASSIFIED AS TYPE I SELECT MATERIAL MAY BE USED AS BACKFILL UPON PRIOR APPROVAL BY THE TRANSPORTATION DIVISION. SEE STANDARDS FOR ADDITIONAL INFORMATION ON DENSITY AND TESTING REQUIREMENTS.
   B. FLOWABLE FILL, IF USED, SHALL MEET THE REQUIREMENTS OF VDOT'S SPECIAL PROVISION FOR FLOWABLE BACKFILL. THE MATERIAL SHALL BE PLANT-CERTIFIED TO PROVIDE A 28-DAY COMPRESSIVE STRENGTH BETWEEN 30 AND 200 PSI. SEE STANDARDS FOR ADDITIONAL INFORMATION ON DENSITY AND TESTING REQUIREMENTS
6. RESTORATION OF ASPHALT PAVEMENT SHALL CONFORM TO SECTION 5.1 OF THE STANDARDS.
7. THE REPAIR SHALL BE RECTANGULAR AND SAW CUT IN STRAIGHT, UNIFORM LINES THAT ARE ALIGNED WITH THE STREET CENTERLINE. WHEN EDGES OF PAVEMENT HAVE BEEN UNDERMINED, PAVEMENT SHALL BE REMOVED TO A NEAT LINE 12" BEYOND THE UNDERMINED AREA. ANY INITIAL PAVEMENT REPAIR WITH AN AREA GREATER THAN 40 SQUARE FEET MAY BE NON-RECTANGULAR, HOWEVER, THE REPAIR SHALL BE SAW CUT IN STRAIGHT, UNIFORM LINES. ANY OTHER DEVIATION ON PATCH SHAPE MUST BE APPROVED BY THE INSPECTOR PRIOR TO THE REPAIR BEING MADE. THE FINISHED PATCH SURFACE SHALL BE WITHIN 1/4 INCH AT ANY POINT ACROSS THE PATCH AS IT RELATES TO THE SURROUNDING STREET SURFACE.
8. A FULL COVERAGE TACK COAT IS REQUIRED ON ALL SURFACES THAT WILL CONTACT THE NEW SURFACE LAYER.

Ⓐ ASPHALT CONCRETE SURFACE COURSE TYPE SM-9.5A @ 165 LBS/SY

Ⓑ 2 1/2" ASPHALT CONCRETE BASE COURSE TYPE BM-25.0

Ⓒ AGGREGATE BASE MATERIAL NO.21A

DATE: July 1, 2013 | UTILITY TRENCH REPAIR | UTR-1

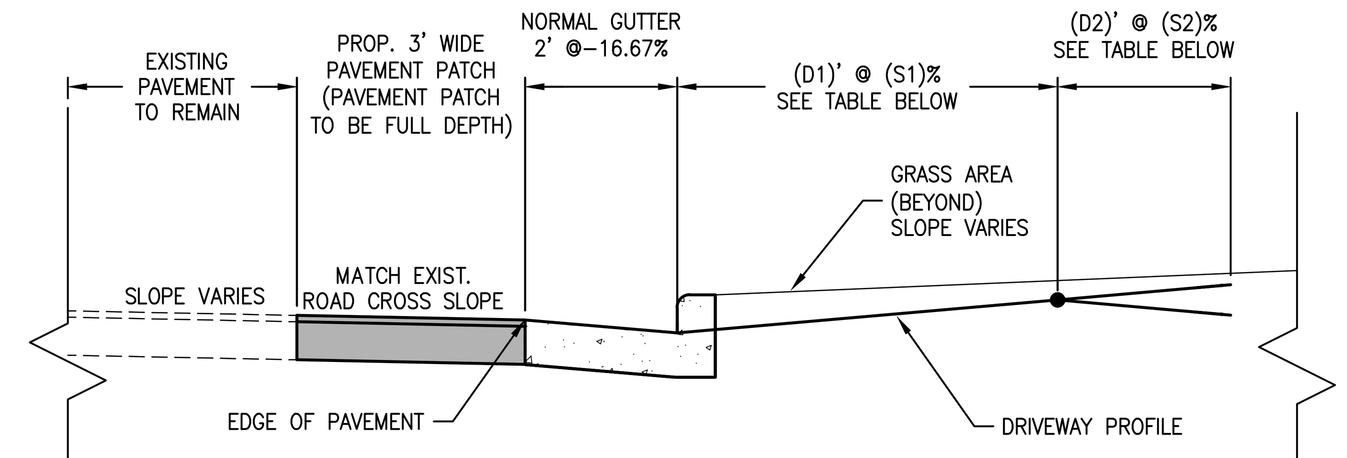

PROPOSED DRIVEWAY SECTIONS
SCALE: 1"=1'

SCHEDULE OF DRIVEWAY SLOPE MODIFICATIONS				
DRIVEWAY	D1	S1	D2	S2
DRIVEWAY #1	5'	10.0%	7.95'	-14.21%
DRIVEWAY #2	5'	12.0%	2.97'	13.47%
DRIVEWAY #3	5'	12.0%	3.01'	3.41%

PB-1

GENERAL
1. METHOD "A" PIPE BEDDING SHALL BE USED FOR ALL TYPES OF PIPE CULVERTS WITHIN THE APPLICABLE HEIGHT OF COVER RANGE NOTED IN THE STANDARD PC-1 TABLES UNLESS OTHERWISE NOTED ON THE PLANS.
2. H = HEIGHT OF COVER MEASURED FROM TOP OF CULVERT TO FINISHED GRADE.
3. b = EXCAVATION DEPTH AS SHOWN ON PLANS OR TO FIRM BEARING SOIL.

CIRCULAR PIPE
1. D = OUTSIDE DIAMETER OF PIPE.
2. d = INSIDE DIAMETER OF PIPE.
3. X = WIDTH OF CLASS I BACKFILL MATERIAL BEYOND THE EXTREMITY OF THE PIPE.
   X = 12" WHERE d IS LESS THAN 36".
   X = 18" WHERE d IS 36" AND GREATER.
4. WHERE DIRECTED BY THE ENGINEER, BEDDING MATERIAL MAY BE ELIMINATED FOR NORMAL EARTH FOUNDATIONS UNDER ROUTINE ENTRANCE PIPE (EXCEPT PLASTIC PIPE) 30" AND LESS IN DIAMETER WITH HEIGHT OF COVER 15' OR LESS.
5. REGULAR BACKFILL MATERIAL MAY BE USED IN LIEU OF CLASS I BACKFILL MATERIAL FOR ALL FOUNDATION TYPES FOR ROUTINE ENTRANCE PIPE (EXCEPT PLASTIC PIPE) 30" AND LESS IN DIAMETER WITH HEIGHT OF COVER 15' OR LESS.
6. BEDDING MATERIAL AND CLASS I BACKFILL MATERIAL MAY BE ELIMINATED FOR SHOULDER SLOT INLET (DI-13) OUTLET PIPES INSTALLATIONS.

ELLIPTICAL PIPE
1. S_1 = OUTSIDE SPAN DIMENSION OF PIPE.
2. S_2 = INSIDE SPAN DIMENSION OF PIPE.
3. R = OUTSIDE RISE DIMENSION OF PIPE.
4. X = WIDTH OF CLASS I BACKFILL MATERIAL BEYOND THE EXTREMITY OF THE PIPE.
   X = 12" WHERE S_2 IS LESS THAN 36".
   X = 18" WHERE S_2 IS 36" AND GREATER
5. WHERE DIRECTED BY THE ENGINEER, BEDDING MATERIAL MAY BE ELIMINATED FOR NORMAL EARTH FOUNDATIONS UNDER ROUTINE ENTRANCE PIPE WHERE S_2 IS 38" OR LESS AND HEIGHT OF COVER 15' OR LESS.
6. REGULAR BACKFILL MATERIAL MAY BE USED IN LIEU OF CLASS I BACKFILL MATERIAL FOR ALL FOUNDATION TYPES FOR ROUTINE ENTRANCE PIPE WHERE S_2 IS 38" OR LESS AND HEIGHT OF COVER 15' OR LESS.

PIPE ARCH
1. S = SPAN DIMENSION OF PIPE.
2. R = RISE DIMENSION OF PIPE.
3. B = SEE PC-1 TABLE FOR APPLICABLE PIPE MATERIAL
4. x = WIDTH OF CLASS I BACKFILL MATERIAL BEYOND THE EXTREMITY OF THE PIPE.
   x = 12" WHERE S_2 IS LESS THAN 36".
   x = 18" WHERE S_2 IS 36" AND GREATER
5. WHERE DIRECTED BY THE ENGINEER, BEDDING MATERIAL MAY BE ELIMINATED FOR NORMAL EARTH FOUNDATIONS UNDER ROUTINE ENTRANCE PIPE WHERE S_2 IS 35" OR LESS AND HEIGHT OF COVER 15' OR LESS.
6. REGULAR BACKFILL MATERIAL MAY BE USED IN LIEU OF CLASS I BACKFILL MATERIAL FOR ALL FOUNDATION TYPES FOR ROUTINE ENTRANCE PIPE WHERE S IS 35" OR LESS AND HEIGHT OF COVER 15' OR LESS.

SPECIFICATION REFERENCE 302 303 | INSTALLATION OF PIPE CULVERTS & STORM SEWERS GENERAL NOTES — VIRGINIA DEPARTMENT OF TRANSPORTATION | VDOT ROAD AND BRIDGE STANDARDS — REVISION DATE — SHEET 1 OF 1 — 107.00

PB-1

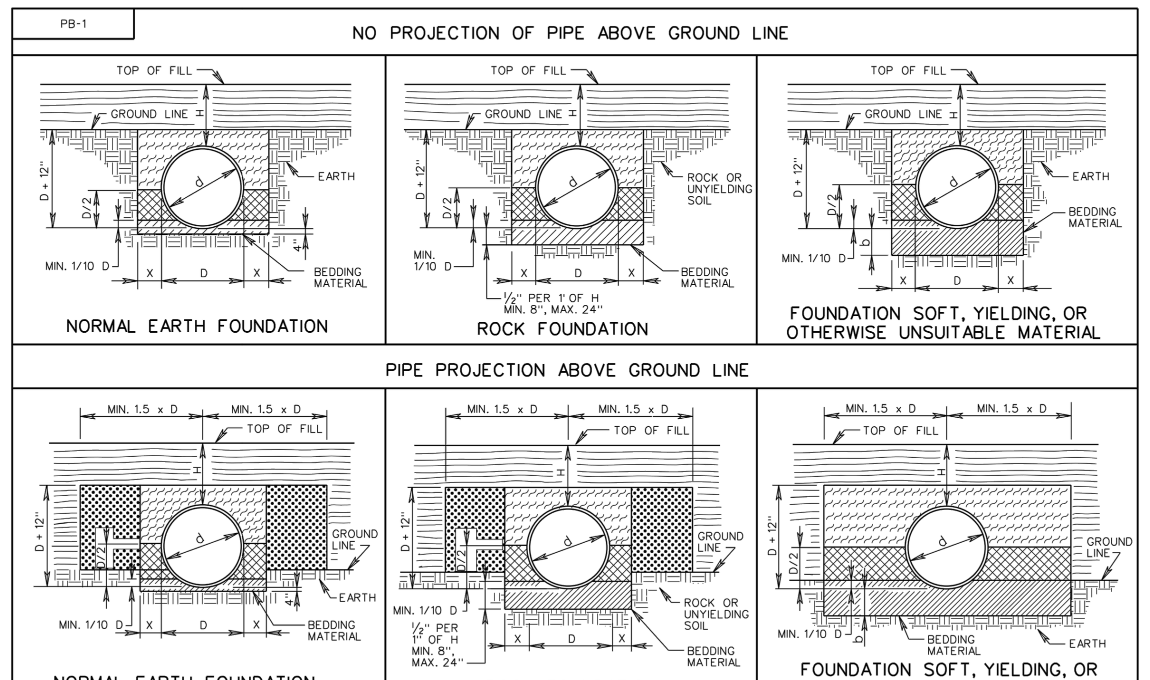

BEDDING MATERIAL IN ACCORDANCE WITH SECTION 302 OF THE ROAD AND BRIDGE SPECIFICATIONS.

CLASS I BACKFILL MATERIAL IN ACCORDANCE WITH SECTION 302 OF THE ROAD AND BRIDGE SPECIFICATIONS.

FOR PLASTIC PIPE CLASS I BACKFILL MATERIAL IN ACCORDANCE WITH SECTION 302 OF THE ROAD AND BRIDGE SPECIFICATIONS.

FOR ALL OTHER PIPE REGULAR BACKFILL MATERIAL IN ACCORDANCE WITH SECTION 302 OF THE ROAD AND BRIDGE SPECIFICATIONS.

EMBANKMENT

REGULAR BACKFILL MATERIAL IN ACCORDANCE WITH SECTION 302 OF THE ROAD AND BRIDGE SPECIFICATIONS.

NOTES:
FOR GENERAL NOTES ON PIPE BEDDING, SEE INSTALLATION OF PIPE CULVERTS AND STORM SEWERS GENERAL NOTES ON SHEET 107.00.

CRUSHED GLASS CONFORMING TO THE SIZE REQUIREMENTS FOR CRUSHER RUN AGGREGATE SIZE 25 AND 26 MAY BE USED IN PLACE OF CLASS I BACKFILL.

VDOT ROAD AND BRIDGE STANDARDS — SHEET 1 OF 4 — 107.01 — REVISION DATE 07/12 | INSTALL. OF PIPE CULVERTS AND STORM SEWERS CIRC. PIPE BEDDING AND BACKFILL - METHOD "A" — VIRGINIA DEPARTMENT OF TRANSPORTATION | SPECIFICATION REFERENCE 302 303

IS-1

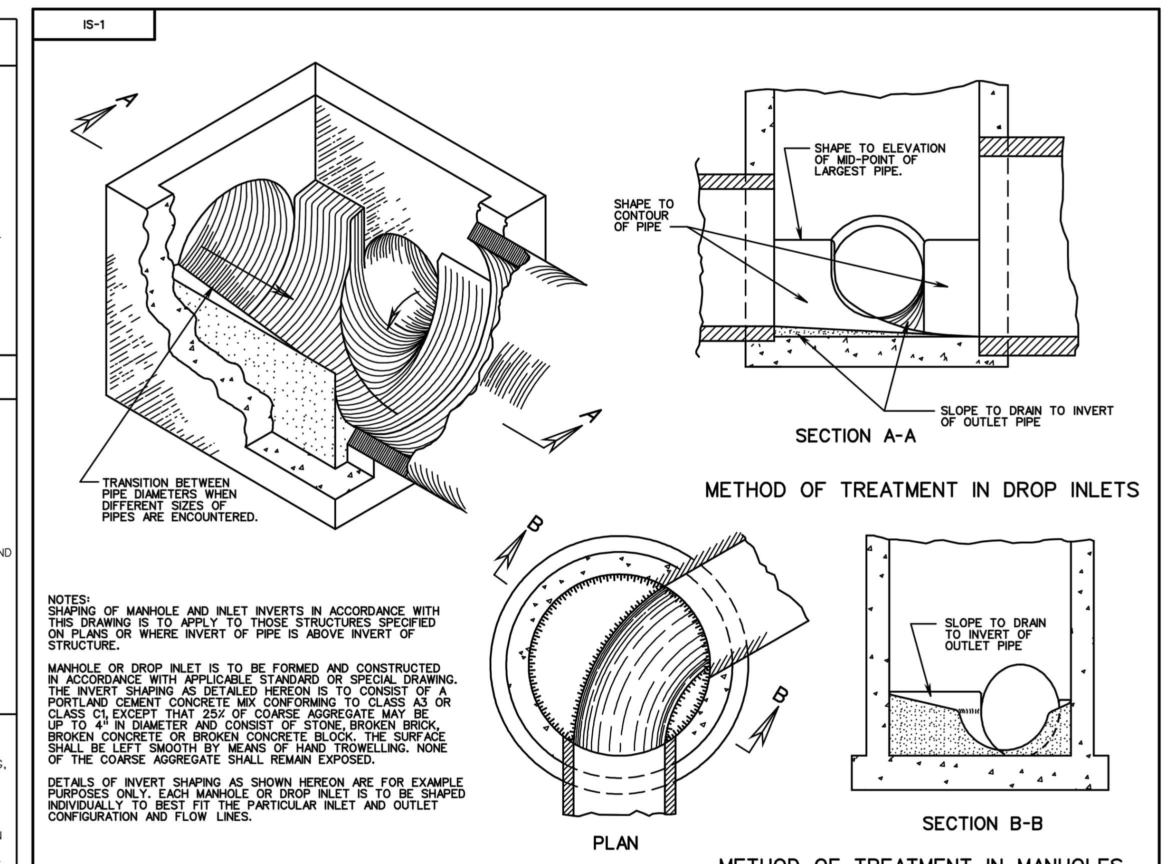

NOTES:
SHAPING OF MANHOLE AND INLET INVERTS IN ACCORDANCE WITH THIS DRAWING IS TO APPLY TO THOSE STRUCTURES SPECIFIED ON PLANS OR WHERE INVERT OF PIPE IS ABOVE INVERT OF STRUCTURE.

MANHOLE OR DROP INLET IS TO BE FORMED AND CONSTRUCTED IN ACCORDANCE WITH APPLICABLE STANDARD OR SPECIAL DRAWING. THE INVERT SHAPING AS DETAILED HEREON IS TO CONSIST OF A PORTLAND CEMENT CONCRETE MIX CONFORMING TO CLASS A3 OR CLASS C1, EXCEPT THAT 25% OF COARSE AGGREGATE MAY BE UP TO 4" IN DIAMETER AND CONSIST OF STONE, BROKEN BRICK, BROKEN CONCRETE OR BROKEN CONCRETE BLOCK. THE SURFACE SHALL BE LEFT SMOOTH BY MEANS OF HAND TROWELLING. NONE OF THE COARSE AGGREGATE SHALL REMAIN EXPOSED.

DETAILS OF INVERT SHAPING AS SHOWN HEREON ARE FOR EXAMPLE PURPOSES ONLY. EACH MANHOLE OR DROP INLET IS TO BE SHAPED INDIVIDUALLY TO BEST FIT THE PARTICULAR INLET AND OUTLET CONFIGURATION AND FLOW LINES.

VDOT ROAD AND BRIDGE STANDARDS — SHEET 1 OF 1 — 106.08 — REVISION DATE | STANDARD METHOD OF SHAPING MANHOLE & INLET INVERTS — VIRGINIA DEPARTMENT OF TRANSPORTATION | SPECIFICATION REFERENCE 302

UB-1

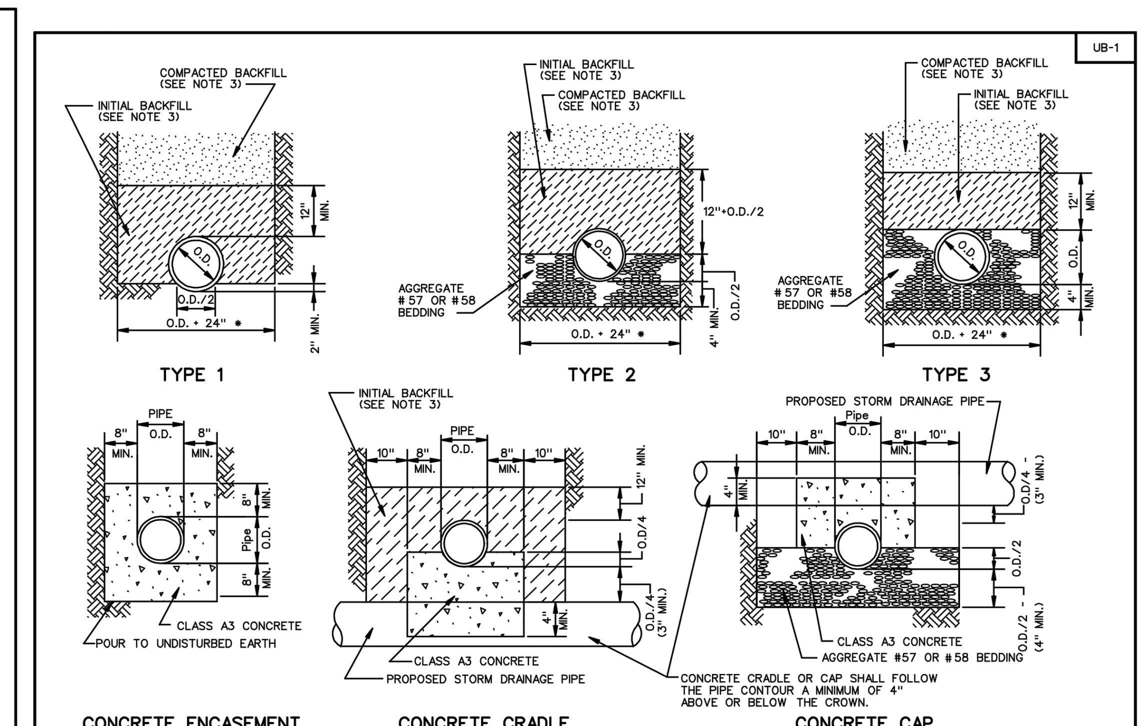

NOTES:
1. WHERE THE TRENCH BOTTOM IS IN ROCK, IT SHALL BE EXCAVATED TO A MINIMUM OF 8" BELOW THE BOTTOM OF THE PIPE BACKFILLED WITH BEDDING MATERIAL.
2. WHERE PIPE FOUNDATIONS ARE YIELDING, PIPE SHALL BE BEDDED ON A MINIMUM OF 8" BEDDING MATERIAL.
3. INITIAL AND COMPACTED BACKFILL SHALL MEET THE REQUIREMENTS OF SECTION 520.03 OF THE VDOT SPECIFICATIONS. CRUSHED GLASS CONFORMING TO THE SIZE REQUIREMENTS FOR CRUSHER RUN AGGREGATE SIZE 25 OR 26 AND MEETING THE REQUIREMENTS OF SECTION 520.03 OF THE VDOT SPECIFICATION MAY BE USED AS BACKFILL MATERIAL.

* FOR PIPE LESS THAN 12" THE TRENCH WIDTH MAY BE 36" MAXIMUM.

UTILITY BEDDING AND PROTECTION
WATER AND SANITARY SEWER FACILITIES
VIRGINIA DEPARTMENT OF TRANSPORTATION
REV 8/07 — 1401.01

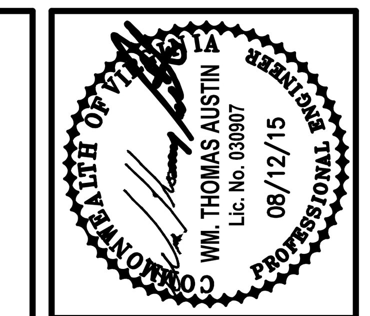

Revisions | Date

Issue Date: JULY 10, 2015
Drawn By: JEF
Designed By: WTA/JEF
Checked By: WTA
Date: 07/10/15

Mattern & Craig
ENGINEERS•SURVEYORS
701 FIRST STREET, S.W.
ROANOKE, VIRGINIA 24016
(540) 345-9342
FAX (540) 345-7691

STORMWATER DRAINAGE IMPROVEMENTS PROJECT
HARTLAND/INGLEWOOD RD, SW
DETAILS
ROANOKE, VIRGINIA

Vertical Scale: N/A

Horizontal Scale: AS NOTED

Commission Number: 3464

Sheet No.: 5

E&SC GENERAL NOTES:

1. THESE EROSION AND SEDIMENT CONTROL (E&SC) SHEETS SHOW E&SC MEASURES WHICH ARE TO BE CONSTRUCTED DURING THE SITE GRADING AND CONSTRUCTION. REFER TO THE FOLLOWING SHEETS FOR EROSION AND SEDIMENT CONTROL NARRATIVE, SEQUENCE OF WORK, DETAILS, AND DESIGN DATA.

2. ALL SPECIFIED AND/OR REQUIRED E&SC MEASURES SHALL BE INSTALLED AND MAINTAINED IN STRICT ACCORDANCE WITH THE REQUIREMENTS AND SPECIFICATIONS CONTAINED WITHIN THE "VIRGINIA EROSION AND SEDIMENT CONTROL HANDBOOK", LATEST EDITION.

3. UNLESS OTHERWISE NOTED IN THE E&SC NARRATIVE, SEDIMENT TRAPS SHALL BE CONSTRUCTED AS A FIRST STEP IN ANY LAND DISTURBING ACTIVITY AND SHALL BE MADE FUNCTIONAL BEFORE UPSLOPE LAND DISTURBANCE TAKES PLACE.

4. STABILIZATION MEASURES SHALL BE APPLIED TO EARTHEN STRUCTURES SUCH AS DAMS, DIKES, AND DIVERSIONS IMMEDIATELY AFTER INSTALLATION.

5. IF OFF-SITE FILL OR BORROW AREAS ARE TO BE USED, THE LOCATION OF OFF-SITE FILL OR BORROW AREAS WILL BE PROVIDED TO THE ROANOKE EROSION AND SEDIMENT CONTROL ADMINISTRATOR. AN EROSION AND SEDIMENT CONTROL PLAN FOR THE FILL/BORROW SITES SHALL BE SUBMITTED AND APPROVED PRIOR TO THE ISSUANCE OF A LAND DISTURBANCE PERMIT FOR SAID FILL/BORROW SITE.

6. DURING CONSTRUCTION OF THE PROJECT, SOIL STOCKPILES AND BORROW AREAS SHALL BE STABILIZED OR PROTECTED WITH SEDIMENT TRAPPING MEASURES. THE CONTRACTOR IS RESPONSIBLE FOR THE TEMPORARY PROTECTION AND PERMANENT STABILIZATION OF ALL SOIL STOCKPILES ON SITE AS WELL AS BORROW AREAS AND SOIL INTENTIONALLY TRANSPORTED FROM THE PROJECT SITE.

7. PERMANENT OR TEMPORARY SOIL STABILIZATION MEASURES SHALL BE APPLIED TO DENUDED AREAS WITHIN SEVEN (7) DAYS AFTER FINAL GRADE IS REACHED ON ANY PORTION OF THE SITE.

8. TEMPORARY SOIL STABILIZATION MEASURES SHALL BE APPLIED WITHIN SEVEN (7) DAYS TO DENUDED AREAS THAT MAY NOT BE AT FINAL GRADE BUT WILL REMAIN DORMANT FOR LONGER THAN THIRTY (30) DAYS. PERMANENT STABILIZATION MEASURES SHALL BE APPLIED TO AREAS THAT ARE TO BE LEFT DORMANT FOR MORE THAN ONE YEAR.

9. PERMANENT SEEDING APPLIED TO ALL MECHANICALLY STABILIZED SLOPES AND SLOPES STEEPER THAN 3:1 AND SHALL MEET THE FOLLOWING SEED MIXTURE:

9.1. TEMPORARY SEEDING MATERIALS (SEASON DEPENDENT)

9.1.1. BETWEEN MAY 2ND AND AUGUST 31ST, TEMPORARY SEEDING SHALL BE GERMAN FOXTAIL MILLET, APPLIED AT A RATE OF 30 LBS/ACRE.

9.1.2. BETWEEN NOVEMBER 1ST AND FEBRUARY 28TH TEMPORARY SEEDING SHALL CONSIST OF ANNUAL RYE APPLIED AT A RATE OF 120 LBS/ACRE. UNDER NO CIRCUMSTANCES SHALL THE CONTRACTOR USE CEREAL RYE.

9.2 PERMANENT SEEDING MATERIALS (SEE PLANS FOR AREAS OF SEEDING APPLICATION)

9.2.1. UNLESS NOTED OTHERWISE, ALL SHOULDER RESTORATION SHALL BE DONE WITH TALL TURF FESCUE MIX (I.E. SOUTHERN LAWN).

9.2.2. TALL TURF FESCUE MIX (I.E. SOUTHERN LAWN): CONSISTS OF A 50/50 BLEND OF WYATT AND DYNASTY TALL FESCUES. USE BLUE-TAG CERTIFIED SEED WITH A DELIVERY DATE NOT GREATER THAN 30-DAYS OLDFROM SITE OF ORIGIN. APPLY AT A RATE OF 20 LBS PER 1,000 SF.

10. ALL AREAS DISTURBED BY THE WORK OF THIS PROJECT SHALL BE STABILIZED BY EITHER THE CONSTRUCTION OF A PERMANENT SURFACE SUCH AS CURB, PAVEMENT, OR CONCRETE SIDEWALK, OR STABILIZED BY MEANS OF PERMANENT SEEDING OR ANOTHER APPROVED STABILIZATION METHOD.

11. FOLLOWING THE COMPLETION OF SITE DEVELOPMENT CONSTRUCTION/GRADING, CONFIRMED STABILIZATION OF ALL DISTURBED AREAS, CONFIRMATION THAT EROSION OR SEDIMENTATION IS NO LONGER OCCURRING ON THE PROJECT SITE OR AT ITS BOUNDARIES, CONFIRMATION THAT DRAINAGE FLOWS ARE FUNCTIONING ACCORDING TO DESIGN, AND APPROVAL HAS BEEN GRANTED BY THE ROANOKE EROSION AND SEDIMENT CONTROL INSPECTOR, THE CONTRACTOR MAY THEN BEGIN TO REMOVE THE TEMPORARY EROSION AND SEDIMENT CONTROL DEVICES. THIS WORK SHALL BE DONE IN A CAREFUL, NEAT, AND ORGANIZED MANNER.

12. A CERTIFIED RESPONSIBLE LAND DISTURBER (RLD) SHALL OVERSEE AND BE INVOLVED IN ALL ASPECTS OF THE LAND DISTURBANCE ACTIVITIES (FROM INITIAL LAND DISTURBANCE THROUGH FINAL STABILIZATION). THE NAME OF THE RLD SHALL BE PROVIDED TO THE CITY OF ROANOKE AT OR PRIOR TO THE PRECONSTRUCTION CONFERENCE. THIS PERSON SHALL ATTEND THE PRECONSTRUCTION CONFERENCE AND PROVIDE THE CITY OF ROANOKE WITH A COPY OF HIS RLD CERTIFICATE.

13. THE WORK OF THE PROJECT INVOLVES LAND DISTURBANCES OF 0.04 AC. UNPAVED AREA AND 0.04 AC. OF DISTURBED PAVED AREA.

EROSION & SEDIMENT CONTROL SYMBOLS LEGEND

- CE — TEMPORARY STONE CONSTRUCTION ENTRANCE (STD. 3.02)
- IP — TEMPORARY INLET PROTECTION (STD. 3.07)
- SF — SILT FENCE (WITHOUT WIRE SUPPORT) (STD. 3.05)
- TS — TEMPORARY SEEDING (STD. 3.31)
- PS — PERMANENT SEEDING MIXTURE (STD. 3.32)
- LIMITS OF LAND DISTURBANCE
- DRAINAGE DIVIDE

TOTAL LAND DISTURBANCE AREA: 1,700 SQ. FT.

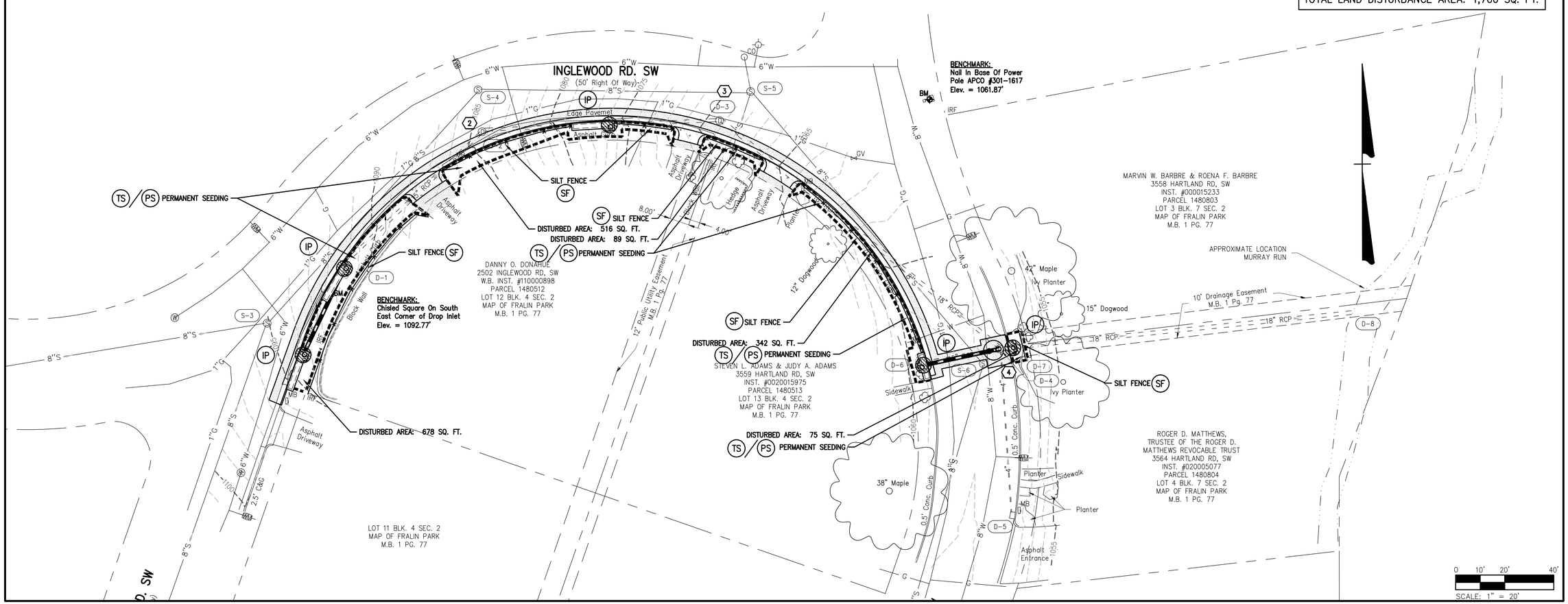

Mattern & Craig
ENGINEERS • SURVEYORS
701 FIRST STREET, S.W.
ROANOKE, VIRGINIA 24016
(540) 345-3342
FAX (540) 345-7691

COMMONWEALTH OF VIRGINIA
WM. THOMAS AUSTIN
Lic. No. 039907
PROFESSIONAL ENGINEER
08/12/15

Revisions	Date

Issue Date: JULY 10, 2015

Drawn By: JEF

Designed By: WTA/JEF

Checked By: WTA

Date: 07/10/15

STORMWATER DRAINAGE IMPROVEMENTS PROJECT HARTLAND/INGLEWOOD RD, SW
EROSION AND SEDIMENT CONTROL PLAN
ROANOKE, VIRGINIA

Vertical Scale: N/A

Horizontal Scale: 1" = 20'

Commission Number: 3464

Sheet No.: 6

R:\Dwgs\3464\Dwg\Rke_City\Site 13\3464_SITE 13_sheets.dwg, 8/13/2015 3:59:14 PM, arb

SILT FENCE (SF)

CONSTRUCTION OF A SILT FENCE (WITHOUT WIRE SUPPORT)

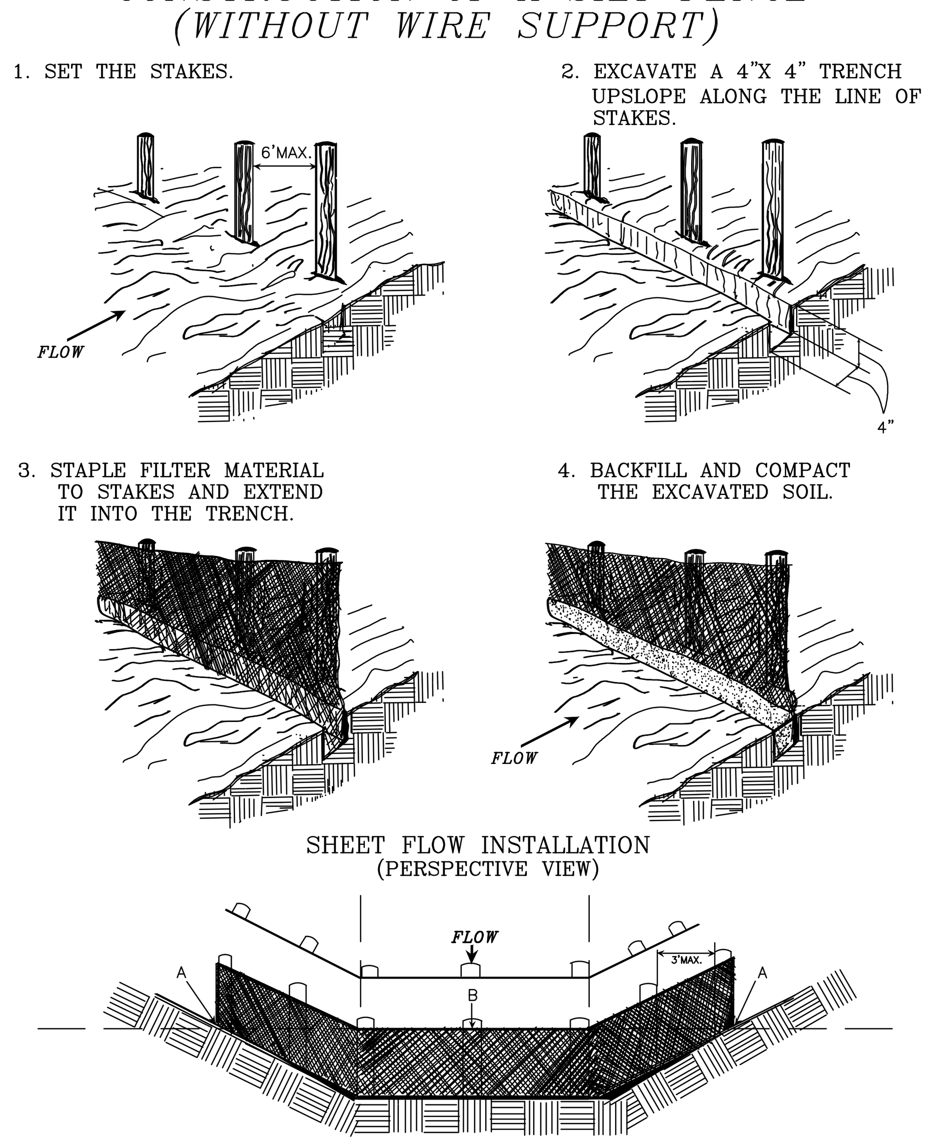

POINTS A SHOULD BE HIGHER THAN POINT B.

DRAINAGEWAY INSTALLATION (FRONT ELEVATION)

SILT FENCE (SF)

(STD. & SPEC. 3.05)

STORM DRAIN INLET PROTECTION (IP)

BLOCK & GRAVEL CURB INLET SEDIMENT FILTER

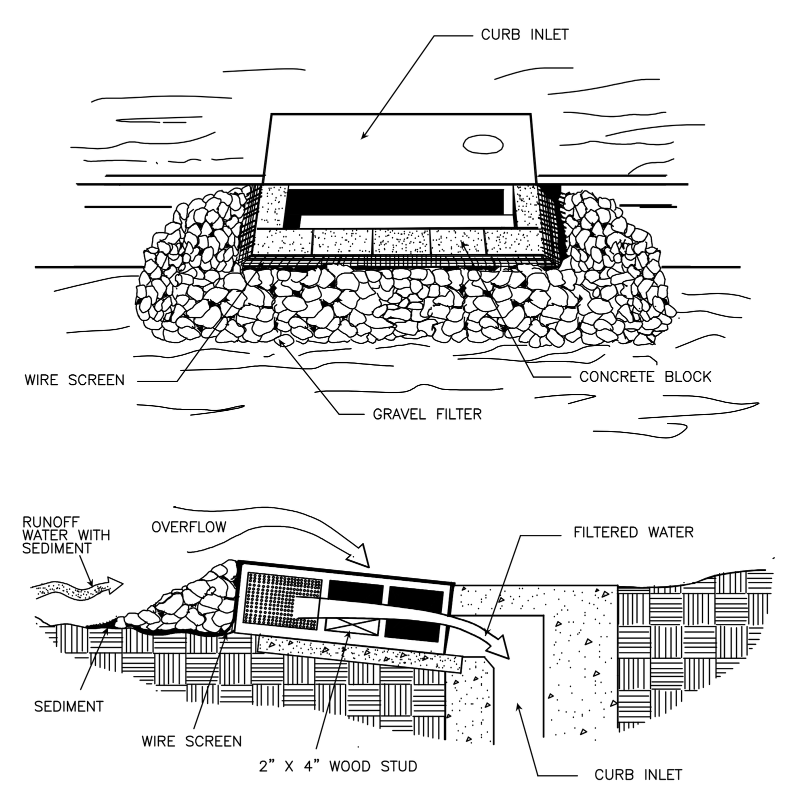

SPECIAL APPLICATION

THIS METHOD OF INLET PROTECTION IS APPLICABLE AT CURB INLETS WHERE AN OVERFLOW CAPABILITY IS NECESSARY TO PREVENT EXCESSIVE PONDING IN FRONT OF THE STRUCTURE.

* GRAVEL SHALL BE VDOT #3, #357 OR #5 COARSE AGGREGATE

STORM DRAIN INLET PROTECTION (IP)

(STD. & SPEC. 3.07–3)

TEMPORARY SEEDING MIXTURE (TS)

TEMPORARY SEEDING MIXTURE:

THE SEEDING INFORMATION PROVIDED BELOW IS FOR GENERAL COMPLIANCE WITH EROSION & SEDIMENT CONTROL REQUIREMENTS. REFER TO PROJECT SPECIFICATIONS FOR ADDITIONAL TECHNICAL REQUIREMENTS.

FERTILIZER: SHALL MEET REQUIREMENTS OF FEDERAL SPECIFICATION 0 F 241. PROVIDE FERTILIZER THAT IS COMPLETE, INORGANIC, UNIFORM IN COMPOSITION, AND SUITABLE FOR APPLICATION WITH APPROVED EQUIPMENT. PROPORTIONS OF FERTILIZER NUTRIENTS SHALL BE THE FOLLOWING:

10 LBS. OF ACTUAL NITROGEN
10 LBS. OF ACTUAL PHOSPHATE
10 LBS. OF ACTUAL POTASH

TEMPORARY SEED MIXTURE: SHALL HAVE THE FOLLOWING CHARACTERISTICS:

SEEDING DATE	SPECIES	PERCENTAGES (MINIMUM)			SEEDING RATE LBS. PER ACRE
		WGT.	PURITY	GERM.	
02/15–03/30	OATS	100	98	85	96
05/01–08/31	MILLET	100	98	80	40
09/01–11/15	RYE	100	96	85	140

LIME: SHALL BE GROUND AGRICULTURAL GRADE LIMESTONE CONTAINING NOT LESS THAN 85 PERCENT CALCIUM AND MAGNESIUM CARBONATES. FINENESS SHALL BE SUCH THAT 100 PERCENT WILL PASS A NO. 20 SIEVE, AND NOT LESS THAN 50 PERCENT WILL PASS A NO. 100 SIEVE. BURNT LIME OR HYDRATED LIME MAY BE SUBSTITUTED IN EQUIVALENT CARBONATES, IF REQUESTED.

MULCH: TYPE I MULCH SHALL BE CURLEX BLANKET EROSION CONTROL FABRIC BLANKET. THE FABRIC SHALL BE MANUFACTURED OF MATERIALS WHICH DEGRADE IN 6 TO 8 MONTHS UNDER OUTDOOR EXPOSURE. TYPE II MULCH COMPOSED OF THRESHED STRAW OF CEREAL GRAIN, PINE NEEDLES, OR WOOD FIBER SHALL BE FREE OF OBJECTIONABLE WEED SEEDS OR OTHER HARMFUL MATERIAL.

BINDER: SYNTHETIC MULCH BINDER FOR USE WITH TYPE II MULCH: CURASOL, DCA 70, PETROSET, OR TERRA TACK.

TEMPORARY SEEDING MIXTURE (TS)

(STD. & SPEC. 3.31)

PERMANENT SEEDING MIXTURE (PS)

PERMANENT SEEDING MIXTURE:

THE SEEDING INFORMATION PROVIDED BELOW IS FOR GENERAL COMPLIANCE WITH EROSION & SEDIMENT CONTROL REQUIREMENTS. REFER TO PROJECT SPECIFICATIONS FOR ADDITIONAL TECHNICAL REQUIREMENTS.

LIME: AS REQUIRED BY SOIL TEST. AGRICULTURAL LIMESTONE CONTAINING MINIMUM OF 85 PERCENT CARBONATES. MINIMUM GRADATION: 100 PERCENT PASSING A 10 MESH SIEVE; 98 PERCENT A 20 MESH SIEVE; 55 PERCENT A 60 MESH SIEVE; AND 40 PERCENT A 10 MESH SIEVE.

FERTILIZER: SHALL BE GRANULAR, OR PELLETED; COMPLETE COMMERCIAL TYPE WITH 50 PERCENT OF THE NITROGEN IN SLOWLY AVAILABLE FORM. ALL FERTILIZER SHALL BE A COMMERCIAL BALANCED FORMULA WITH AT BEST 25 PERCENT ORGANIC MATERIAL, AND SHALL CONFORM TO APPLICABLE STATE FERTILIZER LAWS. IT SHALL BE UNIFORM IN COMPOSITION, IN GRANULAR FORM DRY AND FREE–FLOWING. FOR ALL GRASS AND LAWN AREAS IT SHALL HAVE A MINIMUM GUARANTEED ANALYSIS OF 15 PERCENT NITROGEN, 30 PERCENT PHOSPHORUS, AND 15 PERCENT POTASH.

SEED: ALL PERMANENT GRASS SEED SHALL BE MANUFACTURED BY A SEED COMPANY THAT CAN GUARANTEE ALL SEED SHALL BE FREE OF NOXIOUS WEED SEEDS, CLEANED GRADE A RECENT CROP SEED. SEED COMPANY SHALL PROVIDE GUARANTEED GERMINATION OF 80 PERCENT.

SEED MIXTURE SHALL CONSIST OF (PROPORTIONED BY WEIGHT):

KENTUCKY BLUEGRASS (MIX OF 3 VARIETIES) 25%

TURF TYPE TALL FESCUE (REBEL 3D, TITAN 2,
SHENANDOAH, FINELAWN 88, ANTHEM) 75%

APPLICATION: SEEDING SHALL BE APPLIED BETWEEN MARCH 1 AND MAY 15, OR AUGUST 16 AND OCTOBER 31. CAST SEEDS AT 4 POUNDS PER THOUSAND SQUARE FEET.

MULCH: SHALL BE CLEAN WHEAT OR BARLEY STRAW, FREE FROM NOXIOUS WEED SEED AND OTHER HARMFUL MATERIAL. COMMERCIAL PRODUCTS MAY BE USED WITH APPROVAL.

BINDER: SHALL BE FIBER MULCH BASED TACK BINDER SUCH AS "ENVIRO–BLEND" BY CONWED OR EQUAL. APPLY AT 25 LBS. PER THOUSAND SQUARE FEET ACCORDING TO MANUFACTURER'S RECOMMENDATIONS.

PERMANENT SEEDING MIXTURE (PS)

(STD. & SPEC. 3.32)

CONTECH CDS STRUCTURE

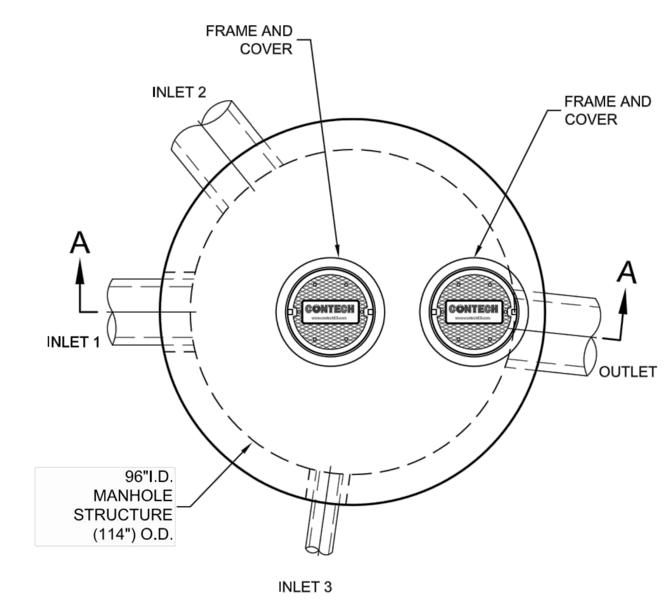

PLAN VIEW

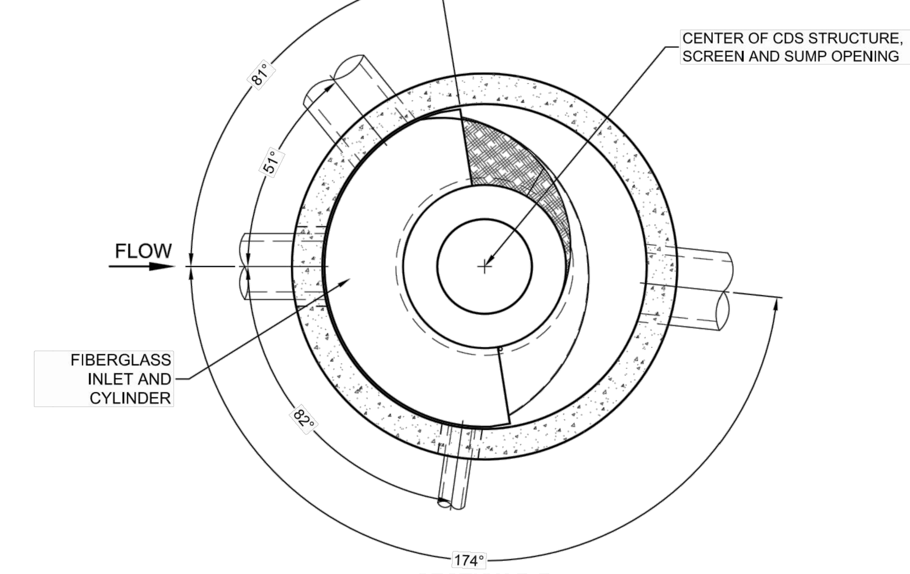

SECTION B-B

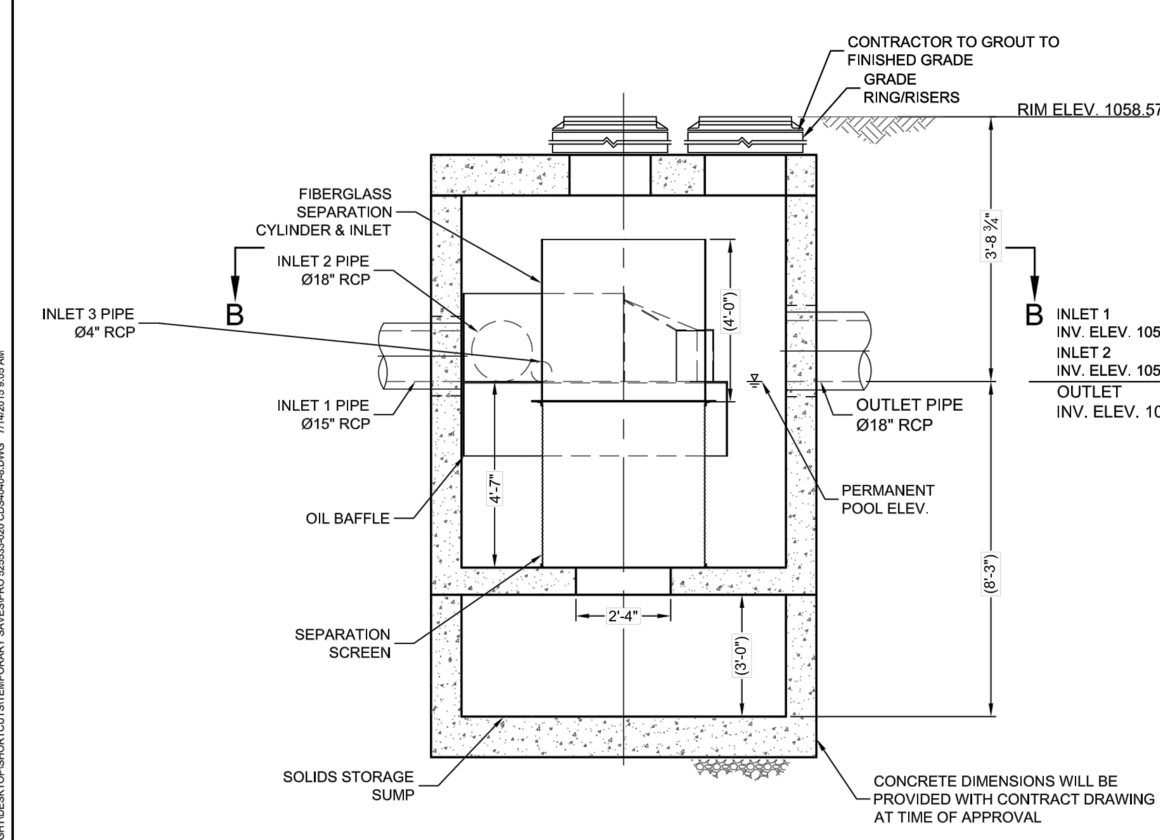

SECTION A-A

MATERIALS LIST - PROVIDED BY CONTECH

COUNT	DESCRIPTION	INSTALLED BY
1	FIBERGLASS INLET & CYLINDER	CONTECH
1	2400 MICRON SEP. SCREEN	CONTECH
1	SEALANT FOR JOINTS	CONTRACTOR
1	GRADE RINGS/ RISERS	CONTRACTOR
2	Ø24" FRAME AND COVER	CONTRACTOR

SITE DESIGN DATA

WATER QUALITY FLOW RATE	5.52 CFS
PEAK FLOW RATE	XX CFS
RETURN PERIOD OF PEAK FLOW	10 YRS

GENERAL NOTES
1. CONTECH TO PROVIDE ALL MATERIALS UNLESS NOTED OTHERWISE.
2. DIMENSIONS MARKED WITH ( ) ARE REFERENCE DIMENSIONS. ACTUAL DIMENSIONS MAY VARY.
3. FOR SITE SPECIFIC DRAWINGS WITH DETAILED DIMENSIONS AND WEIGHTS, PLEASE CONTACT YOUR CONTECH ENGINEERED SOLUTIONS LLC REPRESENTATIVE. www.contechES.com
4. CDS WATER QUALITY STRUCTURE SHALL BE IN ACCORDANCE WITH ALL DESIGN DATA AND INFORMATION CONTAINED IN THIS DRAWING.
5. STRUCTURE SHALL MEET AASHTO HS20 AND CASTINGS SHALL MEET AASHTO M306 LOAD RATING, ASSUMING GROUNDWATER ELEVATION AT, OR BELOW, THE OUTLET PIPE INVERT ELEVATION. ENGINEER OF RECORD TO CONFIRM ACTUAL GROUNDWATER ELEVATION
6. PVC HYDRAULIC SHEAR PLATE IS PLACED ON SHELF AT BOTTOM OF SCREEN CYLINDER. REMOVE AND REPLACE AS NECESSARY DURING MAINTENANCE CLEANING.

INSTALLATION NOTES
A. ANY SUB-BASE, BACKFILL DEPTH, AND/OR ANTI-FLOTATION PROVISIONS ARE SITE-SPECIFIC DESIGN CONSIDERATIONS AND SHALL BE SPECIFIED BY ENGINEER OF RECORD.
B. CONTRACTOR TO PROVIDE EQUIPMENT WITH SUFFICIENT LIFTING AND REACH CAPACITY TO LIFT AND SET THE CDS MANHOLE STRUCTURE (LIFTING CLUTCHES PROVIDED).
C. CONTRACTOR TO ADD JOINT SEALANT BETWEEN ALL STRUCTURE SECTIONS, AND ASSEMBLE STRUCTURE.
D. CONTRACTOR TO PROVIDE, INSTALL, AND GROUT PIPES. MATCH PIPE INVERTS WITH ELEVATIONS SHOWN.
E. CONTRACTOR TO TAKE APPROPRIATE MEASURES TO ASSURE UNIT IS WATER TIGHT, HOLDING WATER TO FLOWLINE INVERT MINIMUM. IT IS SUGGESTED THAT ALL JOINTS BELOW PIPE INVERTS ARE GROUTED.

STRUCTURE WEIGHT
APPROXIMATE HEAVIEST PICK = 30000 LBS.

CONTECH **PROPOSAL** DRAWING

MARK	DATE	REVISION DESCRIPTION	BY

CDS4040-8-C - 525533-01
CITY OF ROANOKE STORM DRAIN IMPROVEMENTS
ROANOKE, VA
SITE DESIGNATION: HARTLAND/INGLEWOOD

CONTECH ENGINEERED SOLUTIONS LLC
www.contechES.com

DATE: 07/14/15
DESIGNED: JLW | DRAWN: JLW
CHECKED: | APPROVED:
PROJECT No.: 525533 | SEQUENCE No.: 20
SHEET: 1 OF #

C:\USERS\JWRIGHT\DESKTOP\SHORTCUTS\TEMPORARY SAVES\PRO 525533-020 CDS4040-8.DWG 7/14/2015 9:05 AM

WM. THOMAS AUSTIN
Lic. No. 030907
08/12/15
COMMONWEALTH OF VIRGINIA PROFESSIONAL ENGINEER

Revisions	Date

Issue Date: JULY 10, 2015

Drawn By: JEF
Designed By: WTA/JEF

Checked By: WTA
Date: 07/10/15

Mattern & Craig
ENGINEERS•SURVEYORS
701 FIRST STREET, S.W.
ROANOKE, VIRGINIA 24016
(540) 345-9342
FAX (540) 345-7691

STORMWATER DRAINAGE IMPROVEMENTS PROJECT
HARTLAND/INGLEWOOD RD, SW

EROSION & SEDIMENT CONTROL AND STORMWATER QUALITY DETAILS

ROANOKE, VIRGINIA

Vertical Scale: N/A

Horizontal Scale: 1" = 20'

Commission Number: 3464

Sheet No.: 7