Roanoke City Municiple South

AHU- 1

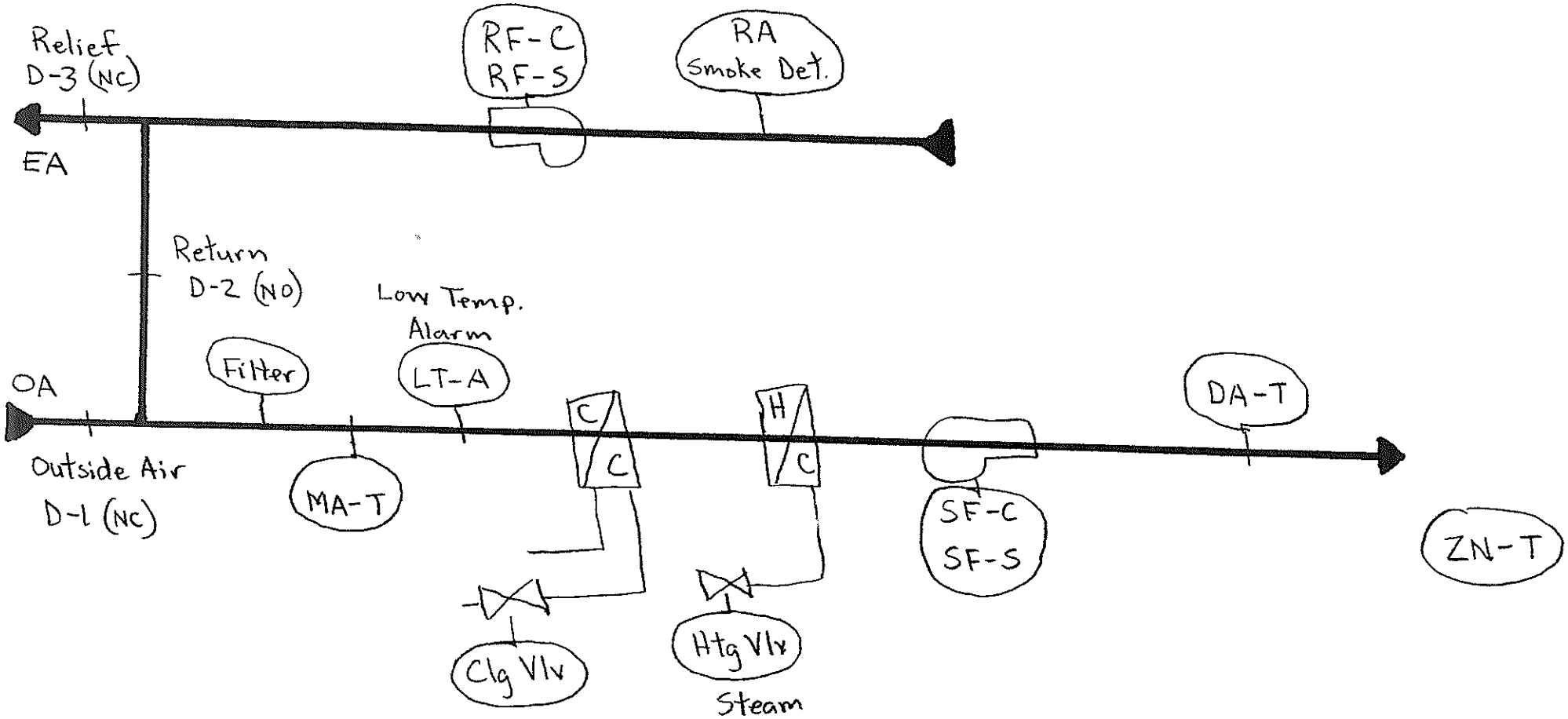

Roanoke City Municiple South

AHU-4 911 center

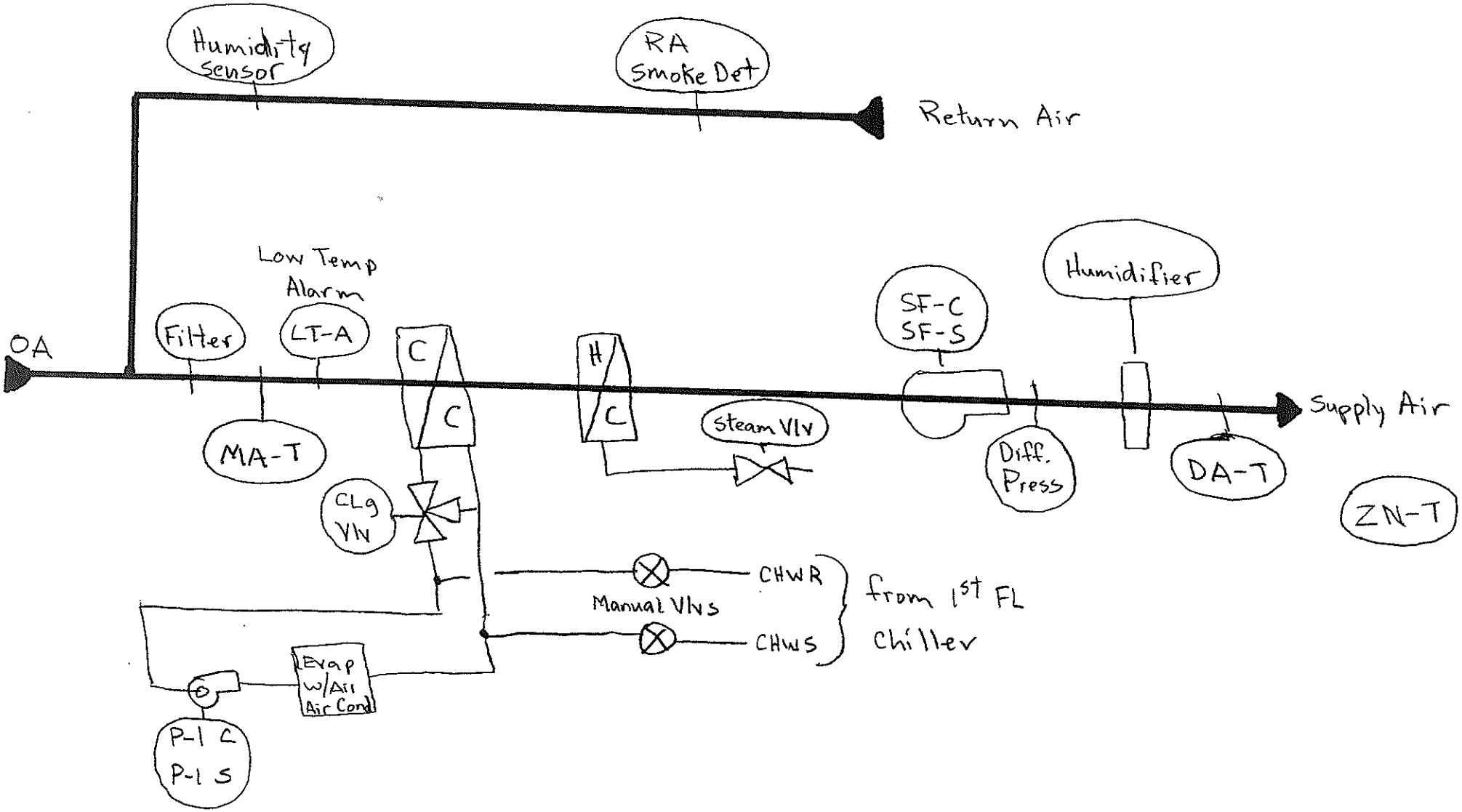

Roanoke City Municiple South
AHU-2, 3, 5

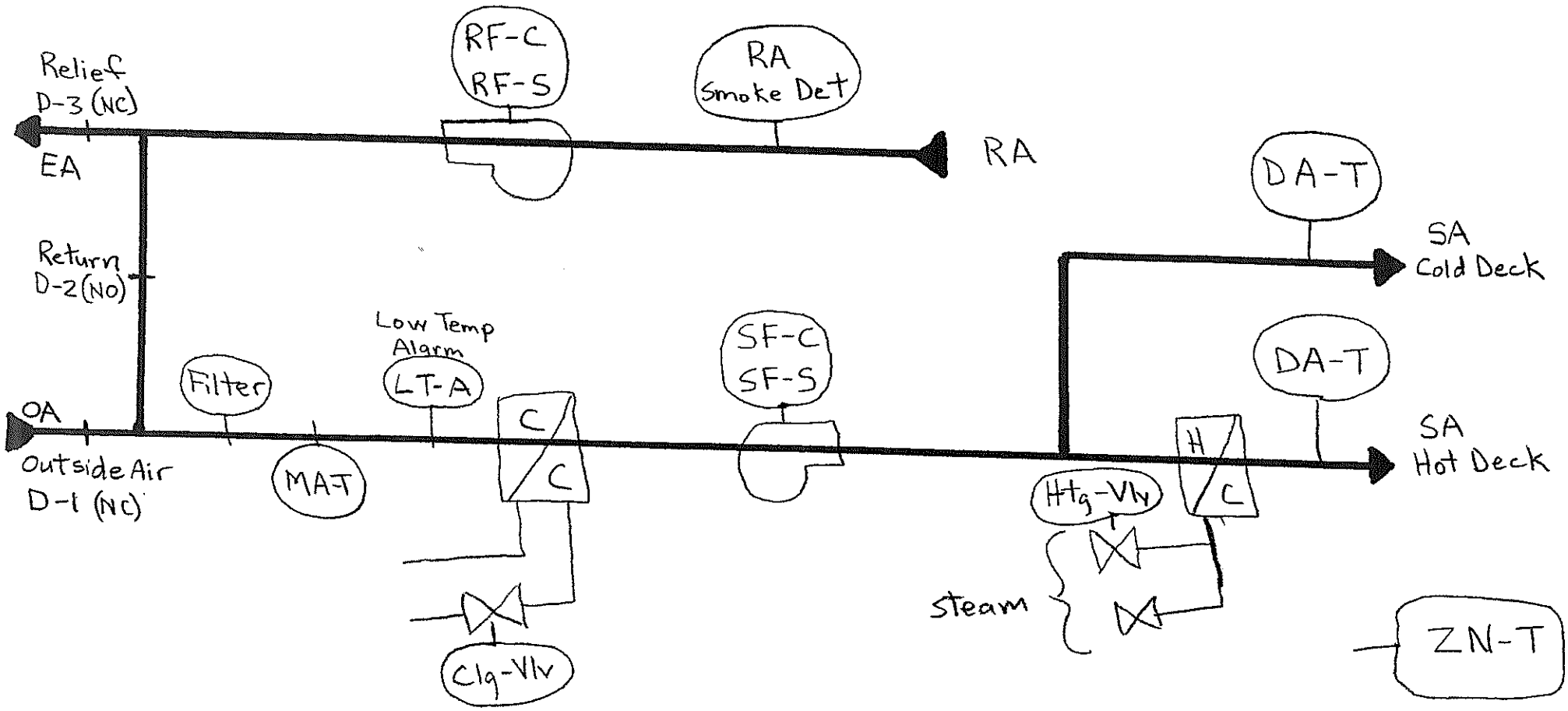

Roanoke City Municiple South Heating

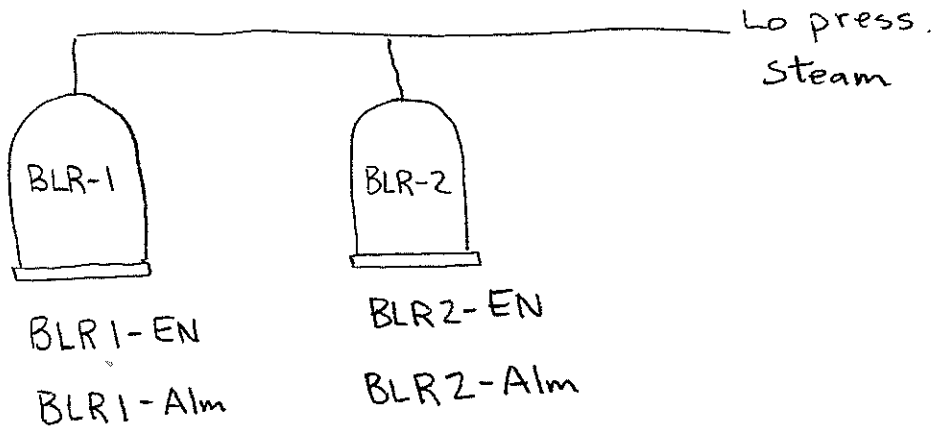

OA-T

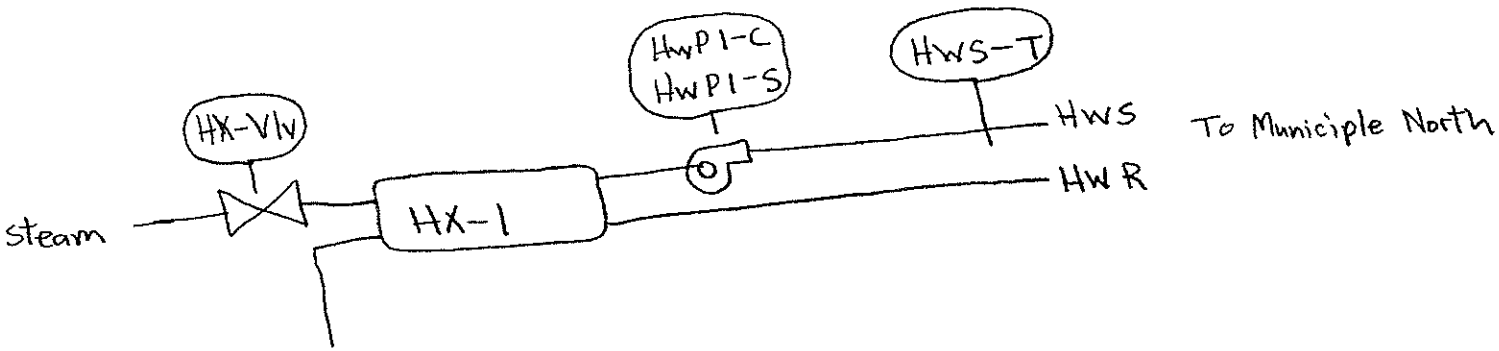

Roanok City Municiple South
Chiller 1st Floor

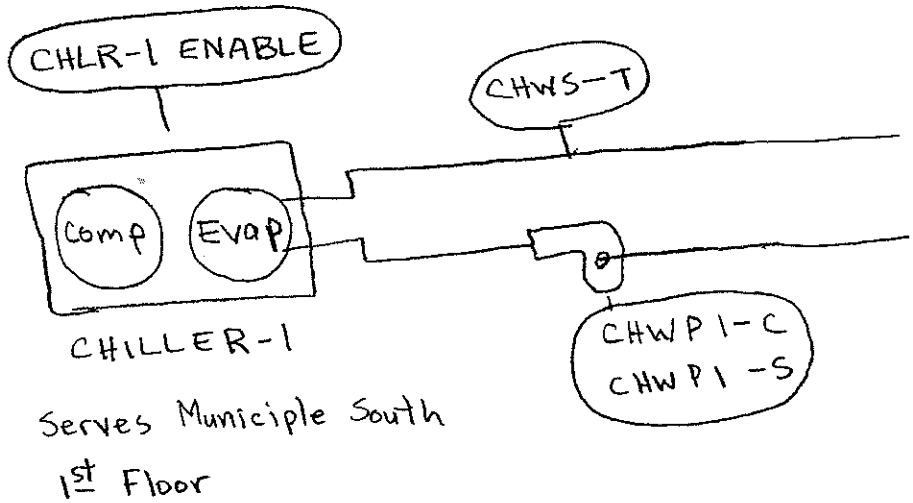

Roanoke City Municiple South / North
chill Water Flow

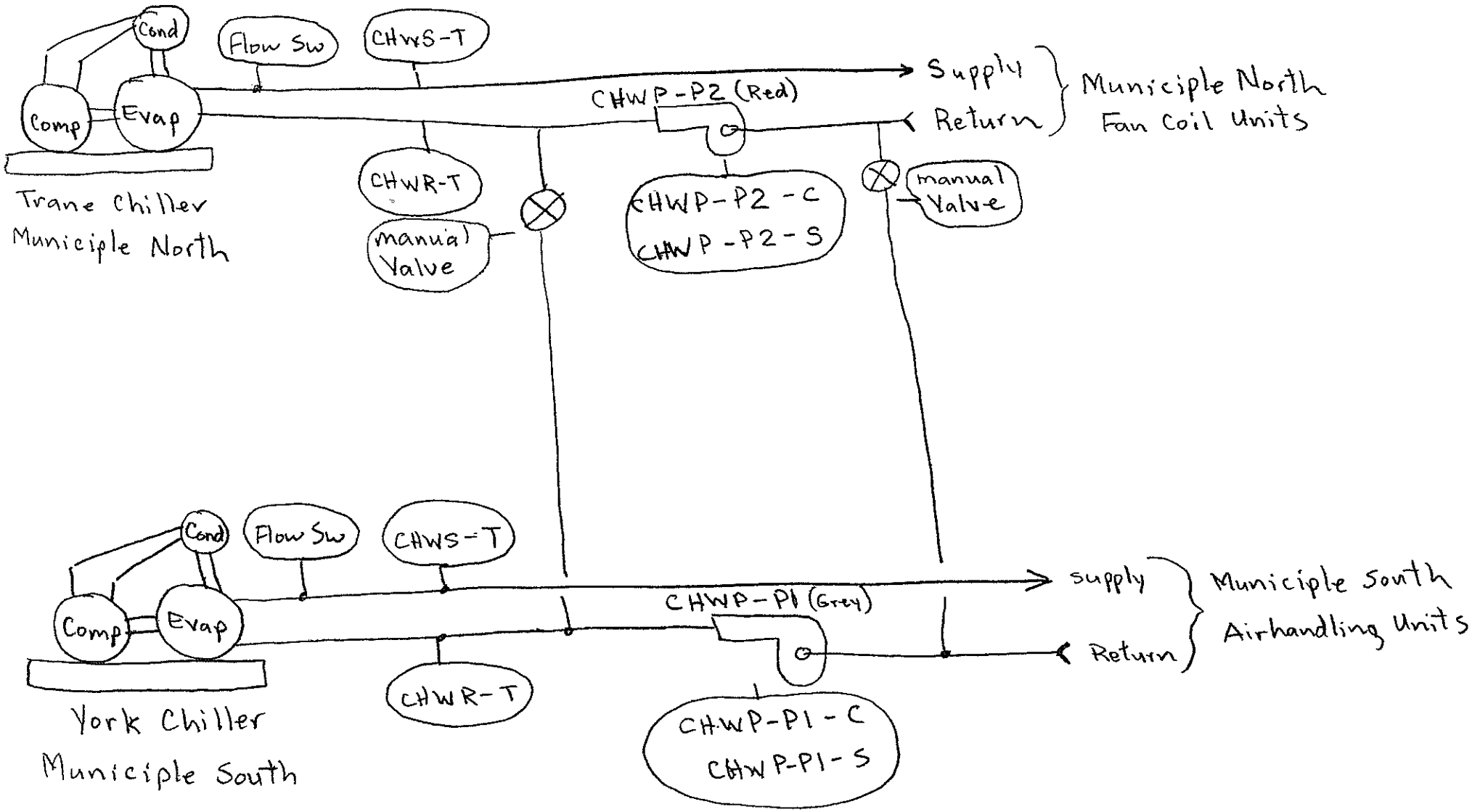

Roanoke City Municiple South/North
condenser Water flow

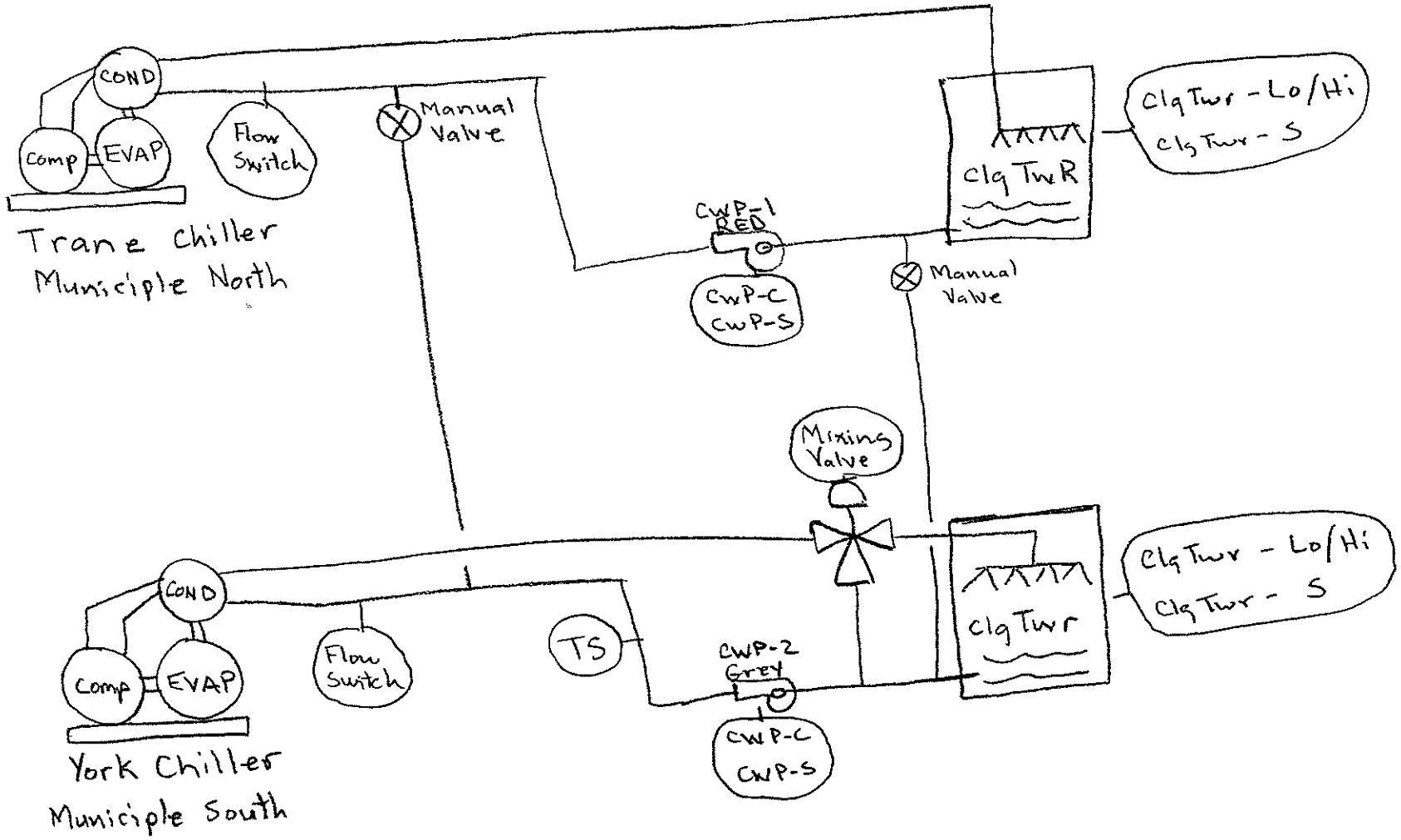

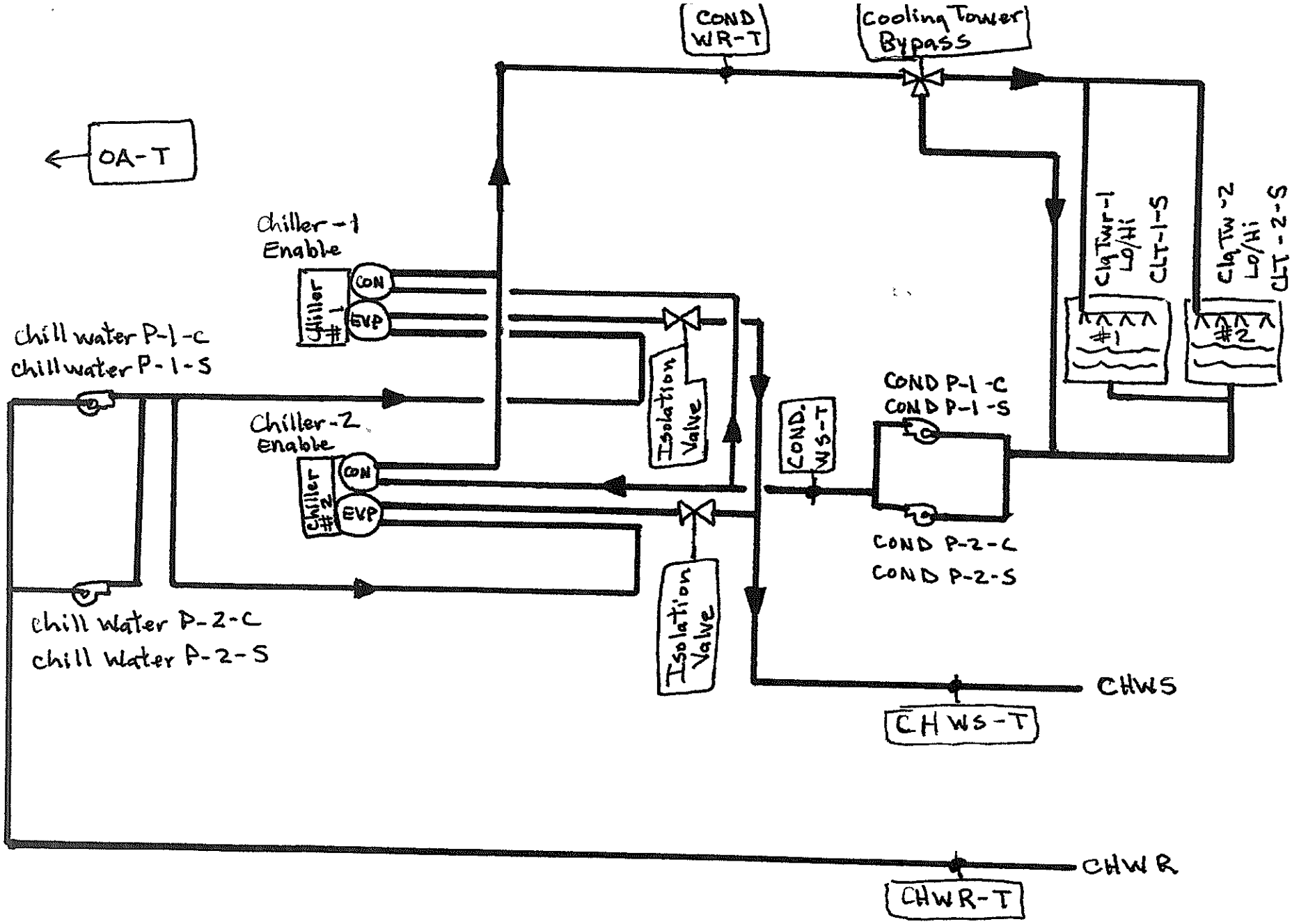

Roanoke City Courts

Chiller/Cooling Tower

Roanoke City Courts
AHU- 1, 2, 3

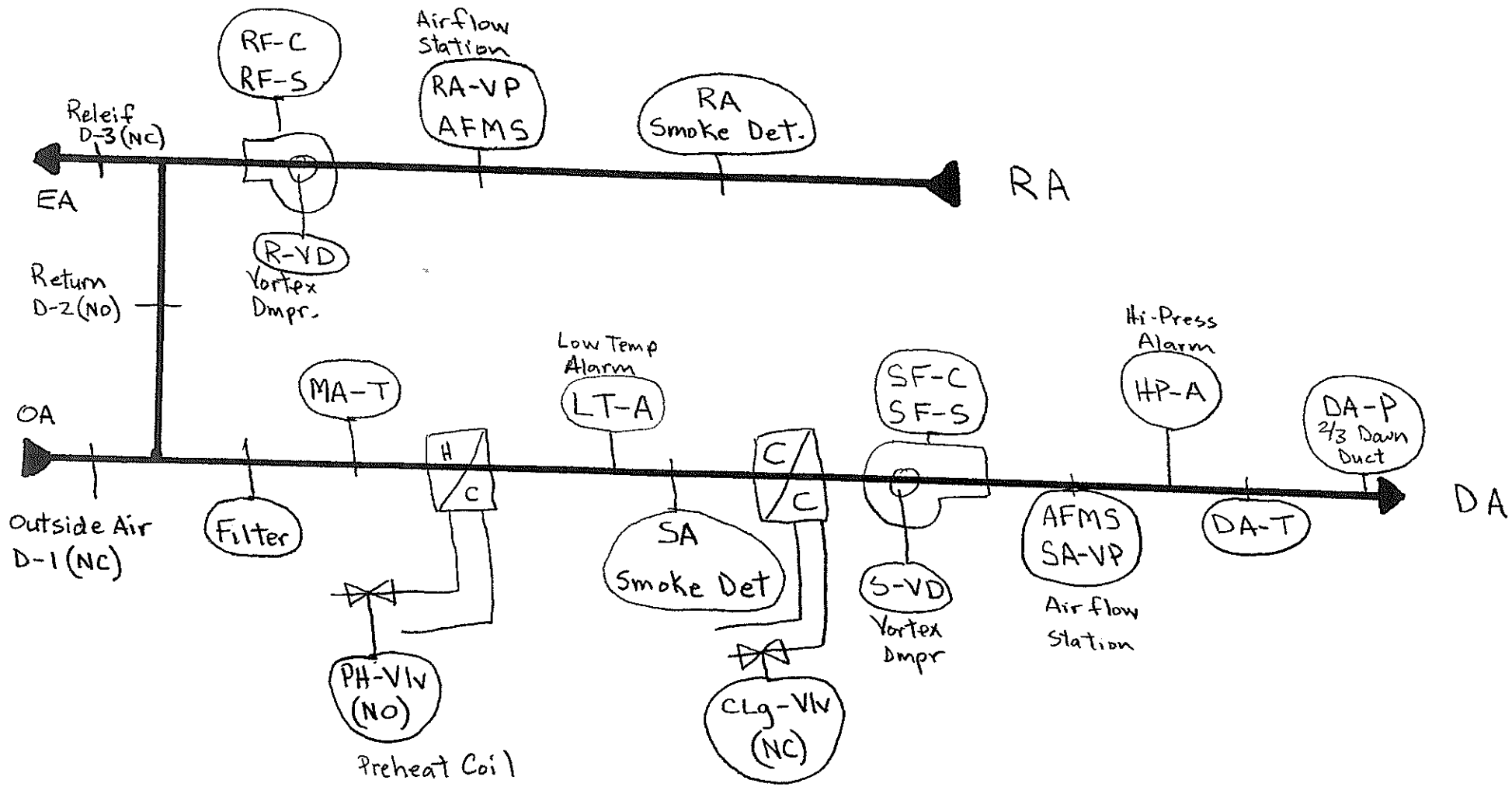

Roanoke City Courts

AHU-4

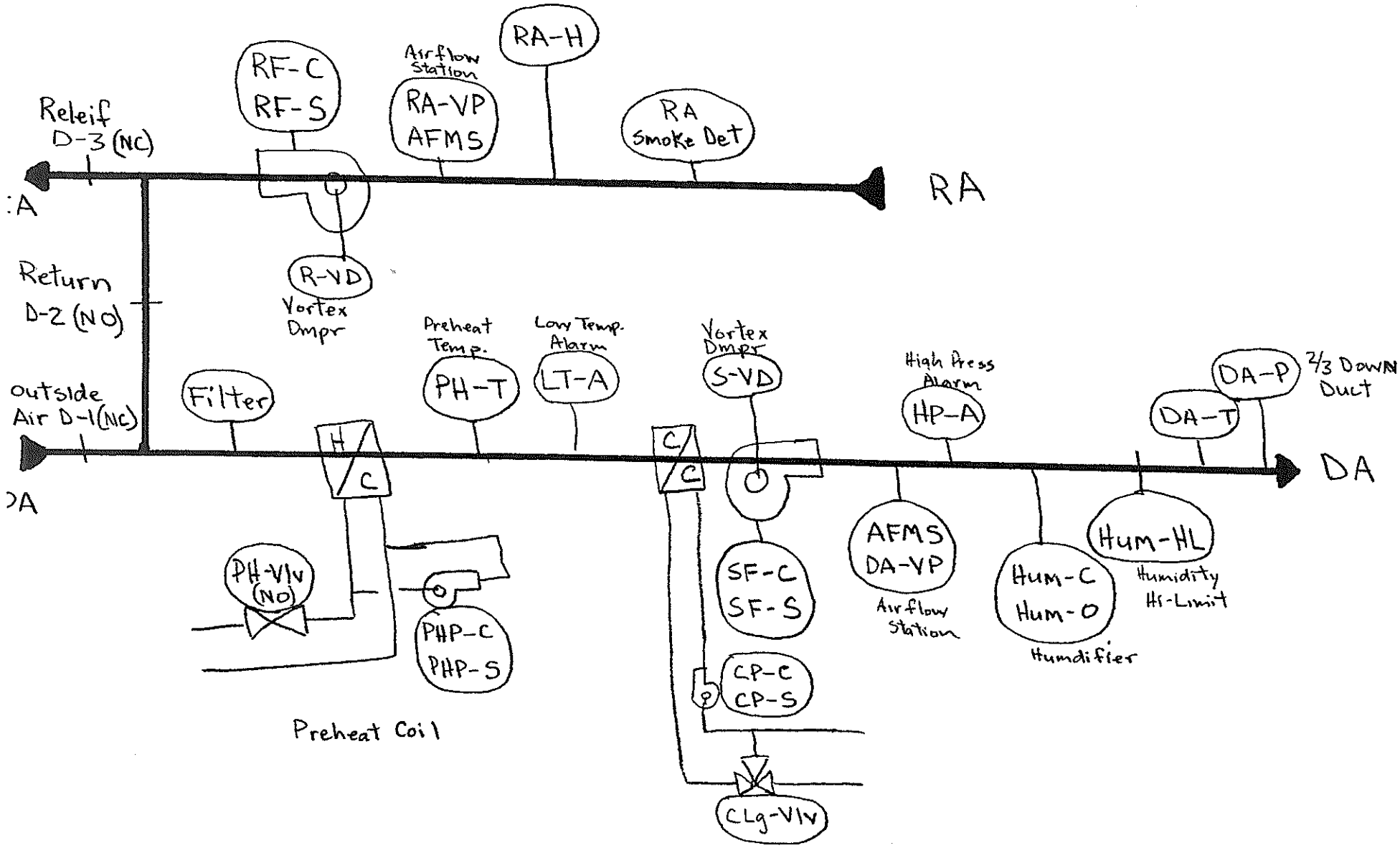

Roanoke City Courts

AHU-5

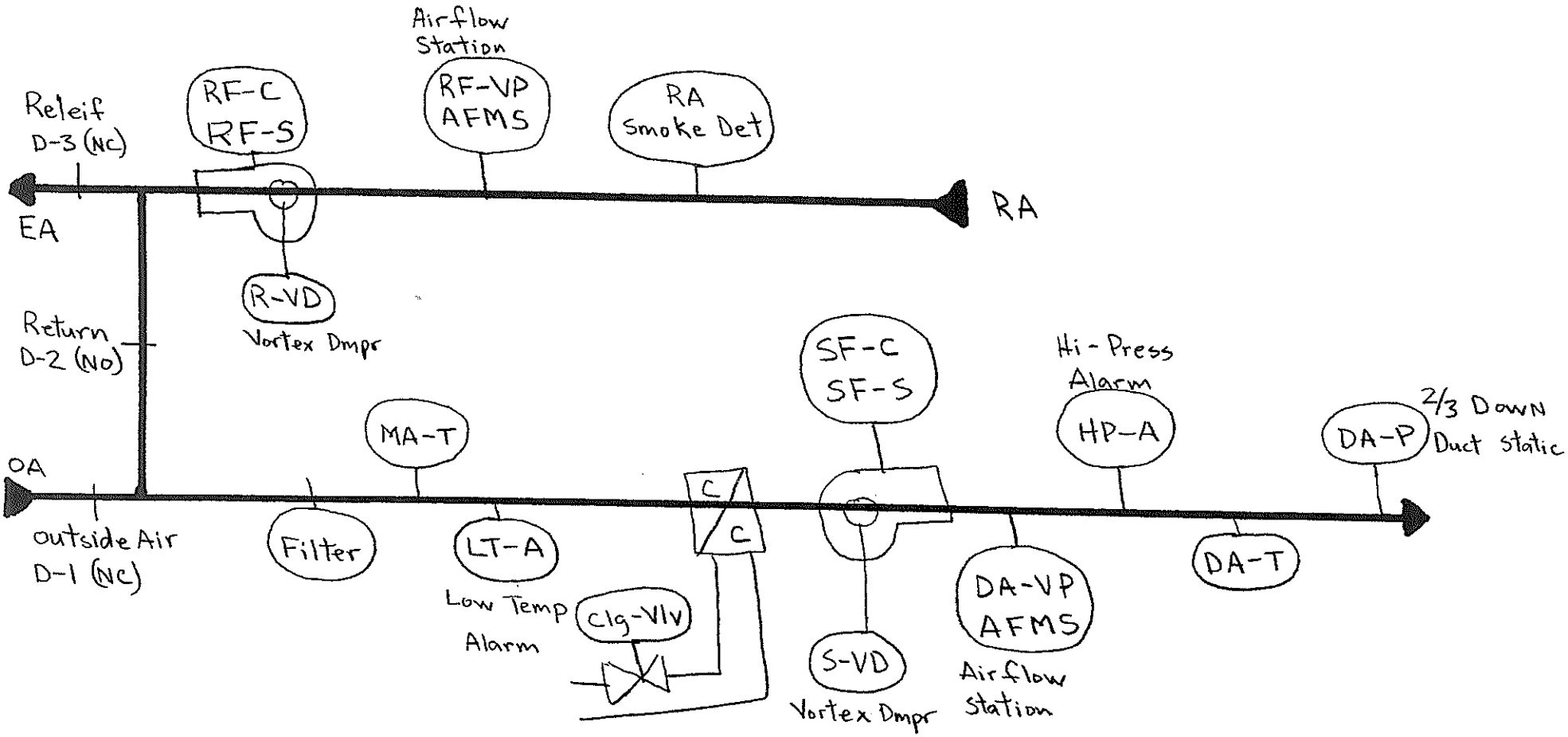

Roanoke City Courts
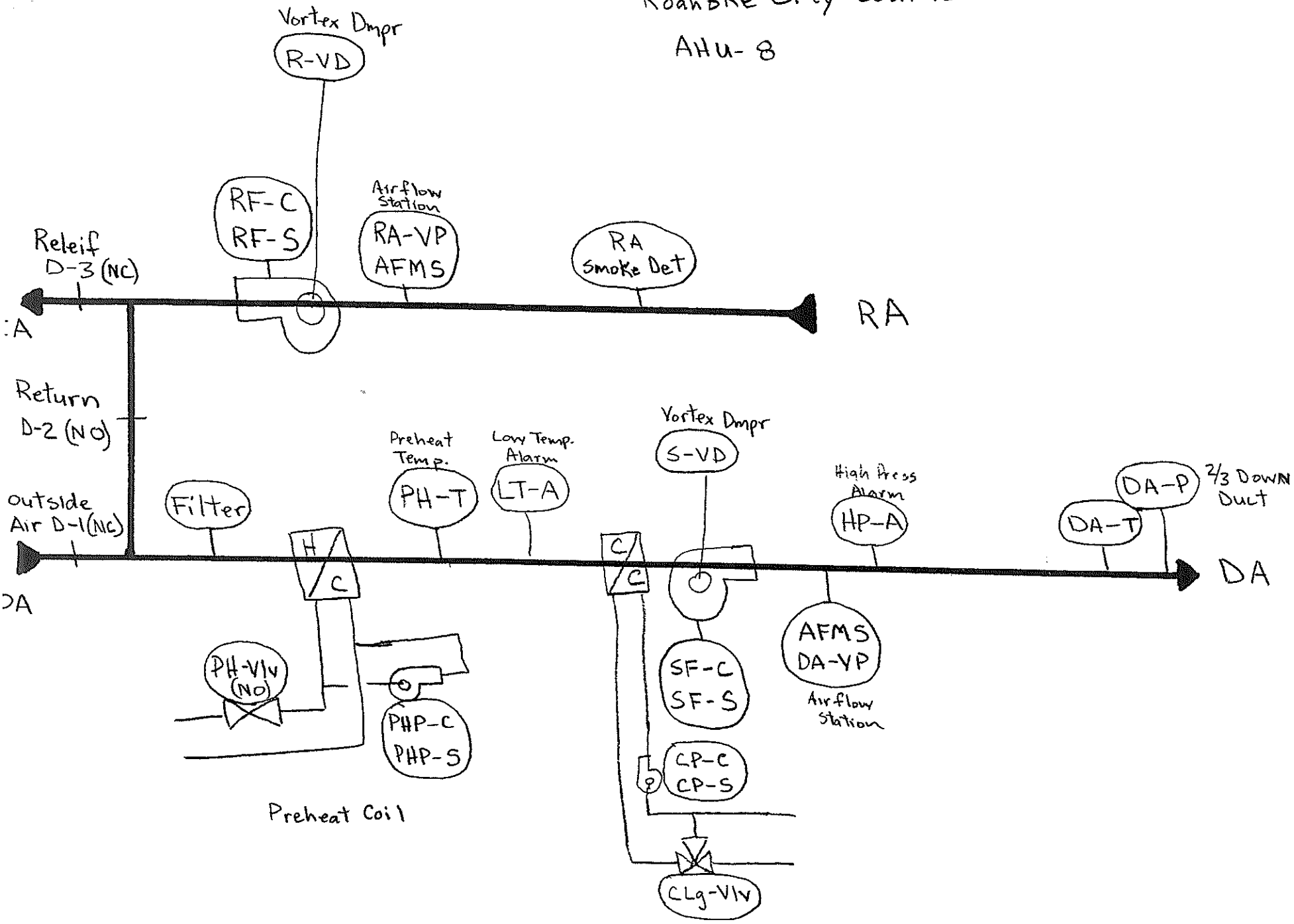
AHU-8