ROANOKE

P R O J E C T M A N U A L

LAUREL RIDGE ROAD / LEWISTON STREET DRAINAGE IMPROVEMENTS PROJECT ROANOKE, VIRGINIA

ITB No. 16-08-10

Date: March 4, 2016

VDOT Standard Project Administration Agreement
Project Number U000-128-R82, UPC 108352
Dated September 9, 2013

Department of Public Works
215 Church Avenue, SW Room 354
Roanoke, Virginia 24011
(540) 853-2741
Fax (540) 853-1364

CITY OF ROANOKE, VIRGINIA

TABLE OF CONTENTS

PROJECT MANUAL FOR

LAUREL RIDGE ROAD / LEWISTON STREET DRAINAGE IMPROVEMENTS PROJECT
ROANOKE, VIRGINIA
ITB NO. 16-08-10

BIDDING DOCUMENTS

- Invitation to Bid
- Instructions to Bidders
- Plan for Participation in Procurement Transactions of Small Businesses and Businesses Owned by Women and Minorities
- Bid Form
- Bid Bond

CONTRACT FORMS

- Escrow Agreement (if applicable)
- Contract
- Contractor's Performance Bond
- Contractor's Labor and Material Payment Bond
- Certificate of Substantial Completion
- Affidavit of Payment of Claims
- Certificate of Final Acceptance

GENERAL REQUIREMENTS

- General Conditions
- Supplemental General Conditions

TECHNICAL SPECIFICATIONS

Division 1 - General

Section	Description
01000	Special Conditions
01100	Hierarchy of Construction Documents
01200	Measurement and Payment
01350	Submittals
01500	Temporary Facilities

Division 2 - Site

Section	Description
02050	Work Area Protection, MOT, and Access
02100	Existing Underground Utilities (Public and Private)
02110	Exploratory Underground Utility Work
02231	Demolition
02300	Excavation

02315	Fill and Backfill
02317	Trenching
02318	Rock Removal
02370	Erosion and Sediment Control
02636	Storm Drainage Piping and Structures
02741	Asphalt Paving
02750	Shoulder Restoration for Curb and Gutter
02910	Topsoil
02930	Seeding

Division 3 - Concrete

Section	Description
03100	Incidental Concrete
03200	Flowable Fill

Division 4 to 16 – Not Used

Appendix	Description
A	City of Roanoke Project Sign Detail
B	Transmittal of Shop Drawings, Equipment Data, Material Samples, or Manufacturer's Certificates of Compliance
C	Request for Information Form
D	Check Dam for Dry Swale
E	Yard Drain and RCP Connection

End of Table of Contents

INVITATION TO BID

CITY OF ROANOKE, VIRGINIA

Sealed Bids for: **LAUREL RIDGE ROAD / LEWISTON STREET DRAINAGE IMPROVEMENTS PROJECT ROANOKE, VIRGINIA**

ITB NO. 16-08-10

This project is generally described as the installation of approximately 1,731 linear feet of various storm drain pipes, 15 storm drain structures, yard drains, dry swales, asphalt milling and overlay, utility relocation, site restoration, and associated work on Laurel Ridge Road and Lewiston Street NW.

Sealed bids will be received by the City of Roanoke by Simone Knowles, Manager, Purchasing Division, or a designee, Noel C. Taylor Municipal Building, 215 Church Avenue, S.W., Room 202, Roanoke, Virginia 24011, at or before 2:00 p.m., local time, on Tuesday, April 5, 2016, at which time all bids received will be publicly opened and read. Bids received after 2:00 p.m. will not be accepted or considered. The time of receipt shall be determined by the time clock stamp in the Purchasing Office, or if it is not working, such time shall be determined by the Purchasing official who is to open the bids. This project is generally described as set forth above.

If the Noel C. Taylor Municipal Building is closed for business at the time scheduled for the bid opening, the sealed bid will be accepted and opened on the next business day of the City, at the originally scheduled hour.

The Instructions to Bidders, plans, specifications, the Contract, and other Contract Documents are incorporated herein by reference. Copies of these items may be examined during business hours at the Stormwater Division, Public Works Service Center, 1802 Courtland Road, NE, Roanoke, Virginia 24012 (Phone: 540-853-5900) or in the City of Roanoke Purchasing Division office, 215 Church Avenue, S.W., Room 202, Roanoke, Virginia 24011 (Phone: 540-853-2871). Bidders are cautioned to review bid documents thoroughly before submitting a bid.

Copies of the documents may be viewed and/or downloaded from the City of Roanoke Purchasing Division's Vendor Self Service system at https://vss.roanokeva.gov or from the Purchasing Division's website at www.roanokeva.gov/purchasing. If you have any problems accessing the documents, you may contact Purchasing at 853-2871 or purchasing@roanokeva.gov. The City will not be responsible for documents obtained from any other source.

All Contract Documents prepared and/or furnished by the Director, Department of Public Works shall be the exclusive property of the City of Roanoke, Virginia, and shall not be used for any other project(s).

Each bidder is solely responsible for ensuring that such bidder has the current complete version of the Bid Documents prepared for the project, including any addenda issued by the City, before submitting a bid.

A non-mandatory pre-bid conference will be conducted on Thursday, March 24, 2016, at 10:00 a.m., local time, at the Engineering Conference Room, 215 Church Avenue, S.W., Room 202, Roanoke, Virginia 24011. It is strongly recommended that all bidders attend this conference.

The Project and the work, services, and materials for such Project are subject to a Virginia Department of Transportation (VDOT or Department) Standard Project Administration Agreement dated September 9, 2013, between VDOT and the City (VDOT Agreement or Department Agreement), and various VDOT, local, State and/or Federal terms and provisions as set forth therein or referred to therein and in the bid documents and/or any resultant contract documents.

Bidders and all subcontractors are required to comply with all applicable city, state, and federal laws, ordinances, and regulations; and are required to be properly licensed under Sections 54.1-1100, et seq., Code of Virginia (1950), as amended. If applicable, Bidders shall deposit with their bid a Bid Security executed in the amount and form stipulated in the Instructions to Bidders.

The City expressly reserves the right to cancel this ITB and/or reject any or all bids, to waive any informality or irregularity in the bids received, and to accept a bid from the lowest responsive and responsible bidder which is deemed to be in the best interest of the City.

If an award of a contract is made, notice of the award, or the announcement of the decision to award, will be made by posting a notice of such award or announcement in the foyer area of the second floor of the Noel C. Taylor Municipal Building at 215 Church Avenue, S.W., Roanoke, Virginia 24011 and also on the City website at www.roanokeva.gov/purchasing (select the Awarded Bids link).

To determine the lowest responsive and responsible bidder who may be awarded a Contract for the Work, the criteria set forth in or requested pursuant to the Instructions to Bidders or in the Bid Documents may be considered.

By submitting a bid, each bidder agrees that this is a solicitation of bids and each bidder agrees to be solely responsible for the cost or expense of its bid and the City shall have no responsibility for such costs or expenses.

If a certain brand, make, item or manufacturer is specifically and exclusively required or called for in the plans, specifications, or other contract documents, then that brand, make, item, or manufacturer shall be used unless otherwise agreed to by the City, in its sole discretion. Otherwise, an equivalent item can be requested as set forth in Section 10 of the Instructions to Bidders, or other Contract Documents.

If the bid by the lowest responsive and responsible bidder exceeds available funds, the City reserves the right to negotiate with the apparent low bidder pursuant to Section 2.2-4318 of the Code of Virginia. The conditions and procedures under which such negotiation may be undertaken are set forth in Section 2.2-4318, and Section 14.3 of Instructions to Bidders. Any such negotiated Contract shall be subject to final approval by the City in its sole discretion**.**

Bids may not be withdrawn for a period of sixty (60) calendar days after the opening of bids unless the bid is substantially lower than the other bids because of a clerical error as defined in Section 2.2 - 4330, of the Code of Virginia (1950), as amended. Pursuant to Section 2.2 - 4330 (B)(1), the bidder shall give notice in writing and shall submit the original work papers with such notice to the City of its claim of right to withdraw the bid within two (2) business days after the opening of bids.

The successful bidder shall comply with the Code of Virginia nondiscrimination provisions of Section 2.2-4311 and the Drug-free workplace provisions of Section 2.2-4312.

Pursuant to Code of Virginia, Section 2.2 - 4343.1, be advised that the City of Roanoke does not discriminate against faith-based organizations.

REMAINDER OF PAGE INTENTIONALLY LEFT BLANK

CITY OF ROANOKE, VIRGINIA

INSTRUCTIONS TO BIDDERS

TABLE OF CONTENTS

SECTION 1.	**DEFINITIONS**
SECTION 2.	**EXAMINATION OF SITE AND CONTRACT DOCUMENTS**
SECTION 3.	**CLARIFICATION AND ADDENDA**
SECTION 4.	**TIME FOR COMPLETION**
SECTION 5.	**CONTRACTORS' LICENSES, PERMITS, FEES, AND TAXES**
SECTION 6.	**PREPARATION AND SUBMISSION OF BIDS**
SECTION 7.	**RECEIPT AND OPENING OF BIDS**
SECTION 8.	**BID SECURITY**
SECTION 9.	**INTENT**
SECTION 10.	**MATERIAL AND WORKMANSHIP**
SECTION 11.	**STATEMENT OF QUALIFICATIONS**
SECTION 12.	**ERRORS IN BIDS**
SECTION 13.	**REJECTION OF BIDS**
SECTION 14.	**ACCEPTANCE OF BIDS, EVALUATION OF BIDS, AWARD OF CONTRACT, AND SECURITY REQUIREMENTS**
SECTION 15.	**ETHICS IN PUBLIC CONTRACTING**
SECTION 16.	**BID PACKAGE CHECKLIST**
SECTION 17.	**PROTESTS**
SECTION 18.	**MISCELLANEOUS**
SECTION 19.	**SUPPLEMENTAL INSTRUCTIONS AND/OR ADDITIONAL INFORMATION FOR BIDDERS**

CITY OF ROANOKE, VIRGINIA

INSTRUCTIONS TO BIDDERS

SECTION 1. DEFINITIONS

Definitions contained in Section 1 of the General Conditions are incorporated herein by reference. The bidder should refer to the General Conditions for definitions used in the Contract Documents. "Successful bidder" is defined as the bidder to whom the City makes an award.

SECTION 2. EXAMINATION OF SITE AND CONTRACT DOCUMENTS

2.1 Each bidder is responsible for examining carefully the site of the Work and the Contract and Bid Documents relating to the Work. By submitting a bid, the bidder acknowledges and agrees that it has examined and considered the conditions to be encountered at and adjacent to the site, the character, quality, and quantities of work to be performed, the material to be furnished, other requirements of the Contract Documents, and to have waived any claim or objection based thereon. Claims as a result of failure to have done such examination will not be considered by the City. See Section 8 of the General Conditions entitled "Conditions at Site."

2.2 Each bidder shall promptly notify, in writing, the Purchasing Division and Stormwater Division of any ambiguity, inconsistency, or error which may be discovered upon examination of the Invitation to Bid, any Bid Documents, and/or any related documents.

SECTION 3. CLARIFICATION AND ADDENDA

3.1 **Questions on Contract Documents:** All questions about the meaning or intent of the Contract Documents shall be directed to the Director, Department of Public Works. Questions received less than seven (7) calendar days prior to the date for opening bids may not be answered. Bidders may only rely upon written addenda issued by the Director, Department of Public Works and no other communication or interpretation, whether oral or written, shall have any effect or efficacy.

3.2 **Addenda:** Any changes, interpretations, or clarifications that may be made to the Contract Documents will be in the form of an addendum. Receipt by the bidder of such addendum shall be acknowledged on the Bid Form. **However, all bidders are solely responsible for making sure that they have received and reviewed any and all addenda that may have been issued for this Invitation to Bid.**

3.3 **Interpretation:** All decisions made in good faith by the Department of Public Works on the meaning or interpretation of the Contract Documents shall be final.

3.4 Bidders Responsibility: All bidders are responsible for ensuring that they have received and examined all bid documents, including all addenda, if any, that may have been issued before submitting their bid. The City is not responsible for any Invitation to Bid documents obtained from any source other than the City. If you have any questions, contact the Purchasing Division by telephone at (540) 853-2871, by fax at (540) 853-1513, or by email at purchasing@roanokeva.gov.

3.5 Quantities: Where the bid documents stipulate a unit price, the quantities of the work and material set forth in the bid form or on the plans approximately represent the work to be performed and material to be furnished and are for the purpose of comparing the bids on a uniform basis. Payment shall be made to the Contractor only for the actual quantities of work performed or material furnished in accordance with the plans and specifications and it is understood that the quantities may be increased or decreased as provided in the General Conditions without in any way invalidating the bid prices.

SECTION 4. TIME FOR COMPLETION

4.1 Time for Completion: Unless otherwise stated or a specific time period is set forth on the Bid Form, each bidder shall indicate in the appropriate blank the number of consecutive calendar days required by such bidder to substantially complete the specified Work, with Final Acceptance to be achieved within thirty (30) consecutive calendar days thereafter. However, no such time period may exceed the number of consecutive calendar days set forth in the Bid Form.

4.2 Weather: The bidder, in preparing and submitting its bid, is required to take into consideration normal weather conditions. Normal weather means a range of weather conditions which might be anticipated, based on weather data for the past ten years. Unusual weather is weather which could not be anticipated based on such data. Normal weather conditions shall be determined from the public historical records available from the National Weather Service. The data sheets to be used shall be for the locality or localities closest to the site of the Work. No additional compensation will be paid to the Contractor because of unusual weather conditions; however, an extension of time for unusual weather may be considered by the City as indicated in the General Conditions.

4.3 Liquidated Damages: The amount indicated on the Bid Form as liquidated damages as described in the General Conditions (Section 21) shall be due from and paid by the Contractor to the City and/or, in the City's discretion, shall be withheld from the Contractor's Request for Payment, and/or retainage, for each consecutive calendar day of delay in excess of the stated time required to complete the Work, unless modified by a Change Order.

SECTION 5. CONTRACTORS' LICENSES, PERMITS, FEES, AND TAXES

5.1 State License: Bidders and all subcontractors are required to comply with all applicable city, state, and federal laws, ordinances, and regulations, including, but not limited to,

registration with the Virginia State Corporation Commission if required by law; and are required to be properly licensed in accordance with Sections 54.1-1100, et seq., of the Code of Virginia, which presently requires one to be licensed as a "Class A Contractor" before submitting a bid of One Hundred Twenty Thousand Dollars ($120,000) or more; or to be licensed as a "Class B Contractor" before submitting a bid of Ten Thousand Dollars to One Hundred Twenty Thousand Dollars ($10,000 to $120,000); or to be licensed as a "Class C Contractor" before submitting a bid of One Thousand Dollars to Ten Thousand Dollars ($1,000 to $10,000). There are also cumulative total amounts which can require a certain class of license and bidders should check these requirements as well. (See also Section 7 of the General Conditions.)

5.2 Other Licenses, Permits, Fees, and Taxes:

a. Successful bidder is responsible for paying on time for all licenses, permits, fees, and taxes applicable to the project. Such charges and fees include, but are not limited to the applicable building permits, mechanical and electrical permits, hauling and dumping of material, and such bidder will have to possess a City business license and be responsible for paying City of Roanoke business license taxes, as applicable. See Section 3 of the General Conditions.

b. Right of Way Excavation Permit – Bidders are advised that all work within the public rights of way requires a Right of Way Excavation Permit from the City's Department of Public Works and/or the City's Department of Planning, Building and Development. The successful Bidder, at its cost, shall be responsible for obtaining such permit(s) and providing a separate Excavation Permit Bond(s) in accordance with the requirements of the City's Right of Way Excavation and Restoration Standards, Revised July 1, 2013. Any such Bond(s) or other items are in addition to the Performance Security and Labor and Material Payment Security required for this Project.

5.3 Virginia State Corporation Commission: Each Bidder/Offeror who is a stock or nonstock corporation, limited liability company, business trust, or a limited partnership or other business entity shall be authorized to transact business in the Commonwealth of Virginia as a domestic or foreign business entity if required by law. Each such Bidder/Offeror shall include in its bid response/proposal response the Identification Number issued to it by the Virginia State Corporation Commission (SCC) and should list its business entity name as it is listed with the SCC. Any Bidder/Offeror that is not required to be authorized to transact business in the Commonwealth as a domestic or foreign business entity as required by law shall include in its bid response/proposal response a statement describing why the Bidder/Offeror is not required to be so authorized. (See Va. Code Section 2.2-4311.2).

SECTION 6. PREPARATION AND SUBMISSION OF BIDS

6.1 Bid Form: Bids shall be submitted on the Bid Form furnished, or copy thereof, and shall be completed and signed in ink. A copy of the Bid Form is provided in these specifications for the information of bidders only. Except as may be otherwise stated, all blank spaces in the Bid Form should be filled in and no changes shall be made to the Bid Form. Erasures or other changes in a bid amount must be explained or noted over

the initials of the bidder. Bids containing any conditions, omissions, unexplained erasures, alterations or items not called for in the bid documents, or irregularities of any kind, may be rejected by the City as being incomplete and/or non-responsive. NO CHANGES MADE TO THE BID FIGURES BY NOTATIONS ON THE OUTSIDE OF THE ENVELOPE WILL BE CONSIDERED IN THE REVIEW AND TABULATION OF BIDS OR FOR ANY OTHER PURPOSE.

6.2 **Escrow:** In accordance with Section 2.2 - 4334, of the Code of Virginia, for bids of $200,000 or more for construction of highways, roads, streets, bridges, parking lots, demolition, clearing, grading, excavating, paving, pile driving, miscellaneous drainage structures, and the installation of water, gas, sewer lines and pumping stations, the Bid Form will include a space for the bidder to indicate an option to use the escrow account procedure in order to have retained funds paid to an escrow agent. Otherwise, unless stated in the Supplemental General Conditions, no escrow will be provided.

6.3 **Signatures:** Each bid must give the full business address of the bidder and be signed by bidder with its usual signature. Bids by partnerships must furnish the full name of all partners and must be signed in the partnership name by one of the members of the partnership or an authorized representative, followed by the signature and designation of the person signing. Bids by corporations must be signed with the legal name of the corporation followed by the name of the state in which they are incorporated and by the signature and designation of the president or other person authorized to bind it in the matter. The name of each person signing shall also be typed or printed below each signature. A bid by a person who affixes to his signature the word "President," "Authorized Agent," or other designation without disclosing such principal firm or employer, may be held to be the bid of the individual signing. Satisfactory evidence of the authority of the president or authorized agent signing on behalf of the corporation shall be furnished upon request by the City.

6.4 **Bid Amounts:** Bidders shall indicate in the appropriate blank spaces on the Bid Form the amounts for the base bid and any alternates, written with ink or typed, in both words and figures. In the event of a discrepancy between the words and figures expressed in the base bid or alternates, the word amount shall govern. Any unit prices for separate items as called for on the Bid Form shall be written with ink or typed in figures in the appropriate blanks.

6.5 **Bid Package Checklist:** Bidders should include with their bid the documents or information set forth in the Bid Package Checklist. See Section 16.

SECTION 7. RECEIPT AND OPENING OF BIDS

7.1 **Delivery of Bid:** It is the responsibility of the bidder to assure that its bid is delivered to the place designated for receipt of bids and prior to the time set for receipt of bids. No bids received after the time designated for receipt of bids will be considered.

7.2 **Receipt of Bid:** The Bid Form, the Bid Security, and all other documents required to be submitted with the bid shall be enclosed in a sealed opaque envelope and addressed as follows:

Purchasing Division
Noel C. Taylor Municipal Building
215 Church Avenue, S.W., Room 202
Roanoke, Virginia 24011

Place in front lower left-hand corner of envelope the project title and bid number as indicated at the top of the Invitation to Bid. Place in the upper left-hand corner of the envelope the bidder's name, mailing address, and Virginia Contractor number.

7.3 **Opening of Bid:** Bids will be opened and read at the time and place stated in the Invitation to Bid. The contents may be made public in accordance with Section 2.2-4342 of the Code of Virginia. The officer or agent of the City, whose duty it is to open them, will decide when the specified time has arrived. No responsibility will be attached to any officer or agent for the premature opening of a bid not properly addressed and identified.

7.4 **Withdrawing Bid:** After the date of opening of bids, no bid may be withdrawn for at least sixty (60) calendar days after such opening date, except as provided in Section 12 of these Instructions to Bidders.

SECTION 8. BID SECURITY

Each bid of $100,000 or more must be accompanied by a Bid Security in an amount equal to five (5%) percent of the maximum possible bid price in accordance with Sections 2.2-4336 and 2.2-4338 of the Code of Virginia. The Bid Security shall be furnished in one of the following forms:

a. Bid Bond, in a form substantially similar to the one provided in the Contract Documents, made payable to the City of Roanoke and properly executed by the bidder as Principal and a Corporate Surety authorized to transact business in the Commonwealth of Virginia. Attorneys-in-fact who execute Bid Bonds must file with the bond a certified copy of their Power of Attorney.

b. Certified check, cashier’s check, or cash escrow deposited with the City of Roanoke Treasurer in the face amount required for the Bid Security and made payable to the City of Roanoke.

c. Personal Bond or Letter of Credit issued by an authorized financial institution in the face amount required for the Bid Security, made payable to the City of Roanoke. These forms of security shall be submitted for review and must be approved by the City Attorney, in his/her sole discretion, at least three (3) business days prior to receipt of bids. Approval will be based upon a determination that the form of security offered will adequately protect the interests of the City as equivalent to a corporate surety's bond.

d. For return of Bid Security, see Sections 13 and 14 of these Instructions to Bidders.

SECTION 9. INTENT

9.1 Work Required: The City requires that the successful bidder perform a complete and satisfactory job in accordance with the Contract Documents.

9.2 Conflicts in Contract Documents: Anything called for by one of the Contract Documents and not called for by the others shall be of like effect as if required or called for by all Contract Documents. In the case of conflict between the Contract Documents, the Contract Documents shall take precedence in the following order: The Contract; addenda starting with the last issued addendum; the Supplemental General Conditions; the General Conditions; the Special Conditions; the specifications with attachments; and the drawings.

9.3 Work Not Described: All work not specifically described in the Contract Documents, yet required to produce a fully functional and properly operating project shall be provided even though every item or minor detail for the proper installation or successful operation of the entire Work is not mentioned in the Contract Documents.

9.4 Completion of Work: The successful bidder acknowledges and agrees that it has taken into account in its bid the requirements of the bid and Contract Documents, local conditions, availability of material, equipment, labor, and any other factors which may affect the performance of the Work. The successful bidder agrees and warrants that it will complete the Work not later than the time period or date indicated for completion.

SECTION 10. MATERIAL AND WORKMANSHIP

10.1 "Or Equal" Clause: The particular brand, make of material, device, or equipment described in the Contract Documents establishes a standard of required function, economy of operation, dimension, appearance, and quality to be met by any proposed substitution. No substitution will be considered unless a written request for approval has been submitted by the bidder and has been received by the Director, Department of Public Works at least ten (10) calendar days prior to the date for receipt of bids. Each such request shall include the name of the material or equipment for which it is to be substituted and a complete description of the proposed substitute including drawings, cuts, performance and test data, and any other information necessary or required by the Director, Department of Public Works for an evaluation. A statement setting forth any changes in other material, equipment, or work that incorporation of the substitute would require shall be included. The burden of proof of merit of the proposed substitute is upon the bidder.

10.2 Approval of Substitution: The Director, Department of Public Works' decision of approval or disapproval of a proposed substitution shall be in his sole discretion and shall be final. If the Director, Department of Public Works approves any proposed substitution, such approval will be set forth in an addendum issued to all recorded bidders. Bidders shall not rely on approvals made in any other manner.

10.3 Adaptation Due to Substitution: The successful bidder shall be responsible for making all changes in the Work necessary to adapt and accommodate any equivalent product or item which it uses. The necessary changes shall be made at the successful bidder's sole expense.

SECTION 11. STATEMENT OF QUALIFICATIONS

Each bidder shall be prepared to submit evidence of qualifications, experience, and financial ability to perform the Work set forth in the Contract Documents, should such be required by the Contract Documents or requested by the Director, Department of Public Works. Furthermore, each bidder must notify the Purchasing Division and the Stormwater Division if bidder has been terminated from any contract or job in the last three (3) years and/or if bidder has been during the last three (3) years debarred from bidding on or performing any federal, state or local procurement or job. If so, bidder must supply details of such matters by separate, written statements included with bidder's response. Any bidder who is currently debarred will not be eligible to bid on this project.

SECTION 12. ERRORS IN BIDS

12.1 Withdrawal of Bid: A bidder may withdraw its bid from consideration if the price bid was substantially lower than the other bids due solely to a mistake therein, provided the bid was submitted in good faith, and the mistake was a clerical mistake as opposed to a judgment mistake, and was actually due to an unintentional arithmetic error or an unintentional omission of a quantity of work, labor, or material made directly in the compilation of a bid, which unintentional arithmetic error or unintentional omission can be clearly shown by objective evidence drawn from inspection of original work papers, documents, and material used in the preparation of the bid sought to be withdrawn.

12.2 Withdrawal Procedure: The bidder shall give notice in writing and shall submit the original work papers with such notice to the City of its claim of right to withdraw its bid within two (2) business days after the conclusion of the opening of bids as set forth in Section 2.2 - 4330 (B)(1), of the Code of Virginia.

12.3 Withdrawal Requirements: Other applicable provisions of Section 2.2 - 4330 of the Code of Virginia shall apply to any errors in bids or any requested withdrawal due to errors in bids.

SECTION 13. REJECTION OF BIDS

13.1 Rejection of Bids: The City reserves the right to cancel the Invitation to Bid, to reject any or all bids, to reject the bid of a bidder who is not in a position to perform the contract, or to waive any informalities in any bid.

13.2 Bid Security Return for Rejected Bids: The Bid Security will be returned to all rejected bidders after the City and the successful bidder have executed the Contract.

13.3 Bid Security Return for Unsuccessful Bids: Should a bid not be accepted by the City within sixty (60) consecutive calendar days after the opening of bids, or within such other time specified in the Bid Documents, each bidder may obtain its Bid Security from the City.

SECTION 14. ACCEPTANCE OF BIDS, EVALUATION OF BIDS, AWARD OF CONTRACT, AND SECURITY REQUIREMENTS

14.1 Acceptance of Bids: Each bidder should submit with its bid documentation the bidder's legal name and indicate the type of business entity bidder is operating under; i.e., if a corporation, bidder should enclose a copy of the Certificate of Incorporation issued by the State Corporation Commission; if a partnership, bidder should enclose a copy of the relevant portions of the Partnership Agreement; if a limited liability company, bidder should enclose a copy of the Certificate of Organization.

14.2 Evaluation and Award to Lowest Responsive and Responsible Bidder: To determine the lowest responsive and responsible bidder with respect to this bid, the following items, may be considered so as to protect the interest of the City:

a. The total base bid plus any alternates (aka - additive bid item) the City elects to accept, if any. The City reserves the right to accept alternates in any order or combination.

b. If a unit price contract is requested, the total amount based on the estimated quantities as set forth in the Bid Form will be considered. (The listed unit prices for each item will control and any mathematical errors may be adjusted by the Purchasing Division using the proper estimated quantities.)

c. The ability, capacity and skill of the bidder to perform the contract or provide the services and/or items required.

d. Whether the bidder can perform the contract promptly and within the time specified, without delay or interference.

e. The character, integrity, reputation, judgment, experience and efficiency of the bidder.

f. The quality of performance of previous contracts or services.

g. The previous and existing compliance by the bidder with laws and ordinances relating to the contract, purchase or service.

h. The equipment and facilities available to the bidder to perform the contract or provide the services and/or items.

i. The sufficiency of the financial resources and ability of the bidder to perform the contract or provide the services and/or items.

j. The quality, availability and adaptability of the supplies, materials, equipment or services to the particular use required.

k. The ability of the bidder to provide future maintenance, parts and service for the use of the subject of the purchase or contract, if required.

l. Bids shall be evaluated based on the requirements set forth in this Invitation to Bid, and other criteria to determine acceptability such as inspection, testing, quality, workmanship, delivery, suitability for a particular purpose and life cycle cost. The City, in its sole discretion, may elect to waive an informality in any bid.

Should a Contract be awarded to a bidder, it will be awarded to the lowest responsive and responsible bidder. If an award of a contract is made, notice of the award, or the announcement of the decision to award, will be made by posting a notice of such award or announcement in the foyer area of the second floor of the Noel C. Taylor Municipal Building at 215 Church Avenue, S.W., Roanoke, Virginia 24011. Said notice or announcement will also be posted on the Purchasing website at www.roanokeva.gov/purchasing (select Awarded Bids link).

14.3 Negotiation of Bid: If the bid by the lowest responsive and responsible bidder exceeds available funds, the City reserves the right to negotiate with the apparent low bidder pursuant to Section 2.2-4318 of the Code of Virginia. The conditions and procedures under which such negotiation may be undertaken are that the appropriate City officials shall determine that the lowest responsive and responsible bid exceeds available funds and notify such bidder in writing of its desire to negotiate. Thereafter, negotiations with the apparent low bidder may be held to obtain a Contract within available funds involving discussions of reduction of quantity, quality, or other cost saving mechanisms. Any such negotiated Contract shall be subject to final approval of the City, in the sole discretion of the City.

14.4 Contract Execution: The successful bidder shall be required, within fourteen (14) consecutive calendar days after receipt of the Contract, to return the signed Contract, and furnish to the City all other documents as enumerated hereinafter:

a. Performance Security (if applicable)

b. Labor and Material Payment Security (if applicable)

c. Certificate of Insurance

d. Escrow Agreement (if applicable)

14.5 Security: A Performance Security and a Labor and Material Payment Security each in the amount of one hundred percent (100%) of the contract amount for all contracts in excess of One Hundred Thousand Dollars ($100,000) in accordance with Sections 2.2-4337 and 2.2-4338 of the Code of Virginia, shall be furnished by the successful bidder in one of the following forms:

a. A Performance Bond and a Labor and Material Payment Bond, on forms as provided in the Contract Documents, made payable to the City of Roanoke, properly executed by the successful bidder as Principal and a Corporate Surety

authorized to transact business in the Commonwealth of Virginia. Attorneys-in-fact who execute the bonds must file with each bond a certified copy of their Power of Attorney.

b. Certified checks, cashier's check, or cash escrow in the face amount required for the Performance Security and the Labor and Material Payment Security each made payable to the City of Roanoke.

c. Personal Bond or Letter of Credit issued by an authorized financial institution in the face amount required for the Performance Security and the Labor and Material Payment Security, made payable to the City of Roanoke. These forms of security must be approved by the City Attorney, in his/her sole discretion. Approval will be based upon a determination that the form of security offered will adequately protect the interests of the City as equivalent to a corporate surety's bond.

14.6 Escrow Agreement Form: In the event the Contract meets the requirements as stipulated in Section 6.2 of these Instructions to Bidders and the successful bidder elects to use the escrow account procedure, the Escrow Agreement Form, as provided in the Contract Documents, shall be executed and submitted to the City within fifteen (15) calendar days after receipt of written notification of bid acceptance. If the executed Escrow Agreement Form is not submitted within the fifteen-day period, the successful bidder shall forfeit and waive the rights to the use of the escrow account procedure.

14.7 Bid Security Return for Successful Bid: Upon the execution of the Contract and approval of the Performance and Payment Securities, the Bid Security shall be returned to the successful bidder. Should the successful bidder fail or refuse to execute the Contract or furnish the required Performance and Payment Securities within the stipulated time, the Bid Security shall be due and paid to the City and the City shall be entitled to collect the Bid Security. In addition, the City may pursue any and all other remedies available to it at law or in equity against said bidder.

SECTION 15. ETHICS IN PUBLIC CONTRACTING

The provisions, requirements, and prohibitions as contained in Sections 2.2 - 4367 through 2.2-4377, of the Code of Virginia, pertaining to bidders, offerors, contractors, and subcontractors are applicable to this project.

SECTION 16. BID PACKAGE CHECKLIST

The following items must be completed and included in your bid package. Failure to include all required forms may result in rejection of the bid. If any of these documents were not included with your Project Manual, please contact the Department of Public Works at (540) 853-2741.

a. Completed Bid Form (all pages).

b. Properly Executed Bid Security (Bid Bond, Certified or Cashier's Check, etc., if applicable).

SECTION 17. PROTESTS

Any bidder who wishes to protest or object to any award made or other decisions made pursuant to the Invitation to Bid may do so only in accordance with the provisions of Sections 2.2-4357, 2.2-4358, 2.2-4359, 2.2-4360, 2.2-4363, and 2.2-4364 of the Code of Virginia, and only if such is provided for in such Code Section. Any such protest or objection must be in writing signed by a representative of the entity making the protest or objection and contain the information required by the applicable Code Sections set forth above. Such writing must be delivered to the City Purchasing Manager within the required time period.

SECTION 18. MISCELLANEOUS

a. No bidder shall confer on any public employee having official responsibility for a purchasing transaction any payment, loan, subscription, advance, deposit or money, service, or anything of more than nominal value, present or promised, unless consideration of substantially equal or greater value is exchanged.

b. The City may make investigations to determine the ability of the bidder to perform or supply the services or items as described in this Invitation to Bid. The City reserves the right to reject any bid if the bidder fails to satisfy the City that it is qualified to carry out the obligations of the proposed contract.

c. The successful bidder must comply with the nondiscrimination provisions of Section 2.2-4311 of the Code of Virginia, which are incorporated herein by reference.

d. The successful bidder must comply with the drug-free workplace provisions of Section 2.2-4312 of the Code of Virginia, which are incorporated herein by reference.

e. It is the policy of the City of Roanoke to maximize and encourage participation by local, Small, Minority-Owned, Women-Owned, and Service Disabled Veteran-Owned businesses in all aspects of City contracting opportunities.

f. The successful bidder shall comply with all applicable City, State, and Federal laws, codes, provisions, and regulations.

g. Providers of any outside services shall be subject to the same conditions and requirements as the successful bidder in regards to law, code or regulation compliance. The City reserves the right of approval for any subcontract work, including costs thereof.

h. This Invitation to Bid and all responses are subject to Section 2.2-4342 of the Code of Virginia regarding public inspection of records and the procedures a bidder must follow to protect trade secrets and proprietary information and could also be subject to the Virginia Freedom of Information Act.

i. Conflict of Interests Act. The provisions, requirements and prohibitions as contained in Sections 2.2-3100, et. seq. of the Code of Virginia are applicable to this Invitation to Bid.

j. The procurement provisions of the Code of the City of Roanoke (1979), as amended, Sections 23.2-1, et. seq., as well as the City Procurement Manual, apply to this Invitation

to Bid, unless specifically modified herein. The City's Procurement Manual can be reviewed at the Purchasing office.

k. Insurance. Successful bidder, and any of its subcontractors, shall, at its or their sole expense, obtain and maintain during the life of the resultant contract the insurance policies and bonds required. Any required insurance polices and bonds shall be effective prior to the beginning of any work or other performance by successful bidder, or any of its subcontractors, under any resultant contract. The policies and coverages required are those as may be referred to in the sample contract and/or the general conditions or other documents of this Invitation to Bid.

l. Each bidder is to notify in writing the Purchasing Division if any of bidder's owners, officers, employees, or agents, or their immediate family members, is currently, or has been in the past year, an employee of the City of Roanoke or has any responsibility or authority with the City that might affect the procurement transaction or any claim resulting therefrom. If so, please provide the Purchasing Division with the complete name and address of each such person and their connection to the City of Roanoke. Each bidder is advised that the Ethics in Public Contracting and Conflict of Interests Act of the Code of Virginia, as set forth in this Invitation to Bid, apply to this Invitation to Bid. Such information should be provided in writing before the bid opening date or may also be provided with the bid response.

SECTION 19. SUPPLEMENTAL INSTRUCTIONS AND/OR ADDITIONAL INFORMATION FOR BIDDERS

These Supplemental Instructions to Bidders modify, change, and/or add to the Instructions to Bidders as indicated below.

A. The Virginia Department of Transportation (VDOT) requires that certain forms and documents be included in the ITB and any resultant contract for this Project. Therefore, these items together with any documents or items provided by the City or referred to in any of the documents are intended to be and should be construed to be consistent with each other whenever possible. If a court or agency of competent jurisdiction determines that a conflict should exist between them, and to the extent of any such conflict, the VDOT documents shall take precedence unless any Federal and/or State rules, regulations, terms, and/or provisions shall require otherwise, in which case they will take precedence. Furthermore, each Bidder, as well as the Successful Bidder, shall notify the Director, Department of Public Works, in writing, if any such conflict(s) should arise among the ITB and/or resultant contract documents and identify such conflict(s) to the Director, Department of Public Works. References in any VDOT documents to State, VDOT, Department, and/or Department Engineer or similar terms shall also be deemed to include the City and/or Director, Department of Public Works where, applicable and the Successful Bidder hereby acknowledges and agrees that the City can enforce all such items against the Successful Bidder for this Project. Bidders are advised to refer to the other parts of the ITB, especially the Supplemental General Conditions, for further information on the above items.

B. Bidders are advised that this ITB and any information or documents provided pursuant to this ITB are subject to the Virginia Freedom of Information Act and the Federal Freedom of Information Act and the Bidder must comply with the provisions of those Acts to protect any documents the Bidder may want protected from disclosure pursuant to the provisions of those Acts.

ADOPTED FEBRUARY 22, 2005

CITY OF ROANOKE, VIRGINIA

Plan for Participation in Procurement Transactions of Small Businesses and Businesses Owned by Women and Minorities

1. POLICY STATEMENT

It is the policy of the City of Roanoke to encourage participation by small businesses and minority-owned and women-owned business enterprises in all aspects of City contracting opportunities. In order to demonstrate its commitment to this policy, the procedures set forth in this document shall be followed whenever possible.

2. DEFINITIONS

A minority business enterprise ("MBE" or "MBES" in the plural form) is a business that is both owned and controlled by minorities. This means that minorities must own fifty-one percent of the business, and that they must control the management and daily operations of the business.

A women business enterprise ("WBE" or "WBES" in the plural form) is a business that is both owned and controlled by women. This means that women must own fifty-one percent of the business, and that they must control the management and daily operations of the business.

A small business ("SB" or "SBS" in the plural form) is a United States business that does not exceed fifty employees, is independently owned and operated, and is not dominant in its field or operation or an affiliate or subsidiary of a business dominant in its field of operation.

A minority is an individual who is a citizen or lawful resident of the United States and is Black, Hispanic, Asian American, American Indian, Alaskan Native or a member of another group who the Small Business Administration has determined is economically and socially disadvantaged under Section 8 (a) of the Small Business Act.

3. EMPLOYMENT DISCRIMINATION PROHIBITED

Every contract of over ten thousand dollars ($10,000.00) to which the City is a party shall contain the provisions in subparagraphs (a) and (b) herein:

(a) During the performance of this contract, the contractor agrees as follows:

1. The contractor will not discriminate against any employee or applicant for employment because of race, religion, color, sex, national origin, age, disability, or any other basis prohibited by state law relating to discrimination in employment, except where there is a bona fide occupational qualification reasonably necessary to the normal operation of the contractor. The contractor agrees to post in conspicuous places, available to employees and applicants for employment, notices setting forth the provisions of this nondiscrimination clause.

2. The contractor, in all solicitations or advertisements for employees placed by or on behalf of the contractor, will state that such contractor is an equal opportunity employer.

3. Notices, advertisement and solicitations placed in accordance with federal law, rule or regulation shall be deemed sufficient for the purpose of meeting the requirements of this section.

(b) The contractor will include the provisions of the foregoing subparagraphs (a)(1), (2) and (3) in every subcontract or purchase order of over ten thousand dollars ($10,000), with regard to the contract with the City, so that the provisions will be binding upon each subcontractor or vendor.

4. <u>LIST OF MBEs, WBEs AND SBs</u>

The City's Purchasing Division will establish and maintain a list of minority-owned and women-owned business enterprises. As appropriate, this list may include vendors at regional, state and national levels. A separate list of local MBES and WBES shall be established and, when established, be made available or the master list shall be searchable for local vendors. The local area shall consist of the Roanoke Valley, which shall include those areas included in the metropolitan statistical area as defined by the United States Office of Management and Budget for Census Bureau data purposes. The regional area shall include all cities, counties and towns, within the Commonwealth of Virginia, any part of which fall within a 50 mile radius of the City of Roanoke.

The City's Purchasing Division will establish and maintain a list of small businesses at the regional level.

The Purchasing Division shall serve as the primary contact for businesses to request to be added to the MBE/WBE list or the small business list and for businesses, organizations or individuals desiring access to the lists.

In maintaining these lists, the City's Purchasing Division will cooperate with the Virginia Department of Minority Business Enterprise, the United States Small Business Administration and other public or private agencies.

The Purchasing Division will maintain a list of agencies and organizations that provide assistance and/or education to MBES, WBES and SBS and inform such businesses of the resources available to them. The list will contain the types of services offered and contact information. The Purchasing Division will assist other organizations in publicizing training opportunities for MBES, WBES and SBS.

5. ALL CONTRACTS

In procuring goods and services for the City, all City employees shall follow the guidelines and mandates contained in the Purchasing Division's Procurement Manual with regard to solicitation of MBES and WBES.

When bids or proposals are solicited directly from potential contractors, solicitations shall include, when possible, appropriate businesses from the lists maintained by and/or available to the Purchasing Division, including but not limited to the list from the Virginia Department of Minority Business Enterprise.

All solicitation, addenda and award actions over $30,000 shall be posted on the City of Roanoke's web site http://www.roanokeva.gov

Invitation to Bid solicitation notices over $50,000 and Requests for Proposals estimated to be over $30,000 shall be advertised in both The Roanoke Times and The Roanoke Tribune whenever possible. Such Invitation to Bid solicitation notices and Requests for Proposals shall also be advertised on RVTV.

6. CONSTRUCTION CONTRACTS

This paragraph shall apply to all construction contracts whenever advertising of the Invitation to Bid is required.

The bid documents will contain a list of, or a reference to a list of, MBES, WBES and SBS. The list will be provided to assist and encourage the general contractors' use of the listed businesses as subcontractors.

The City will provide a copy of the plans and specifications for all construction projects to the Southwest Virginia Community Development Fund, F. W. Dodge of Roanoke, and Valley Construction News plan room(s) so that MBES, WBES and SBS can review the documents. The documents will also be available for review, at no charge, at the Stormwater Division, Public Works Service Center, 1802 Courtland Road, NE, Roanoke, Virginia 24012.

The Director, Department of Public Works, the Purchasing Manager and the Project Engineer will require that general contractors make a "best or good faith effort" to seek the participation of and utilize MBES, WBES and SBS as suppliers and subcontractors. General contractors will be required to show that they have made efforts to recruit MBES, WBES and SBS by incorporating into the bid or proposal form:

a. Statements indicating efforts to negotiate with MBES, WBES and SBS and the results of such efforts. Bidders will be required to list those MBES, WBES and SBS from whom quotations for labor, materials, and/or services have been solicited, and state which MBES, WBES and SBS, if any, the contractor will use on the project if awarded the bid; and

b. A certification that the contractor has made a good faith effort to utilize MBES, WBES and SBS whenever possible.

A bid response that does not contain such statements and certification will be deemed non-responsive and will be rejected.

If the contractor listed MBES, WBES and/or SBS that it would use on the project if awarded the bid and the contractor is awarded the bid, the contractor will be required to use his or her best efforts to utilize the MBES, WBES and SBS identified by the contractor unless the contractor can demonstrate a nondiscriminatory, sound, business reason for not using the MBE, WBE or SB. The Department of Public Works' designee, in his or her sole discretion, will determine whether or not the contractor has demonstrated a nondiscriminatory, sound, business reason.

The contractor, in every monthly request for payment, shall submit a status report of MBE, WBE, and SB participation in the project to date. Payment shall not be issued to the contractor until such status report is submitted.

The Purchasing Manager will closely monitor the requirements of this section.

7. RACIAL DISCRIMINATION IN CONSTRUCTION CONTRACT BONDING AND INSURANCE

In construction contracting, if any person is found by the City Manager or a designee to have engaged in discrimination on the basis of race or gender in the granting of bonds or insurance to persons who contract with or desire to contract with the City, or to persons who receive subcontracts or desire to receive a subcontract in connection with a City contract, the person shall be deemed unqualified to submit a bond or insurance for any City construction contract unless and until the City Manager or designee determines that the discrimination has been purged and that adequate assurances have been made that it will not recur. Any determination by the City Manager of a violation of this section shall be reported in writing to City Council.

8. FEDERAL, STATE OR OTHER GRANT REQUIREMENTS

In addition to the provisions of this Plan, when the City is using funds subject to federal, state or other grant requirements with regard to MBES, WBES and/or SBS, the City's Department managing the specific solicitation will take all necessary affirmative steps to assure that the requirements of the grant or program are met.

9. ECONOMIC DEVELOPMENT

The Department of Economic Development will assist the Purchasing Division by providing MBES, WBES and SBS with information regarding the resources available to them and by referring such businesses to the Purchasing Division for additional information.

The Department of Economic Development will also include MBES, WBES and SBS in any programs it has to introduce and familiarize businesses with opportunities in the City.

10. DEBARMENT

Any offeror or bidder, or any principal thereof or person associated therewith, found to have engaged in substantial and intentional misrepresentation concerning either good faith MBE, WBE and/or SB participation efforts or its status as a minority owned, women owned or small business shall be debarred from any City contracting for a period of two (2) years. This debarment shall also extend to any successor firm substantially controlled or managed, whether directly or indirectly, by any debarred individual. This determination shall be made by the City Manager or a designee; and any debarment shall be reported in writing to Council.

11. REPORTING

The Purchasing Manager shall, at the conclusion of each fiscal year, report to the City Manager for report to City Council on the Purchasing Division's compliance with this Plan and efforts made pursuant to the Plan. The report shall also include the level of participation by MBES, WBES and SBS in contracts that have been awarded by the City through formal solicitations during that fiscal year.

REMAINDER OF PAGE INTENTIONALLY LEFT BLANK

CITY OF ROANOKE, VIRGINIA

BID FORM

DATE:_____

SUBMITTED BY:_____
(Exact Legal Name of Bidder)

NOTE: ALL PAGES OF THE BID FORM ARE TO BE INCLUDED IN THE COMPLETED BID. ALSO, BIDS CONTAINING ANY CONDITIONS, OMISSIONS, UNEXPLAINED ERASURES, ALTERATIONS OR ITEMS NOT CALLED FOR IN THE BID, OR IRREGULARITIES OF ANY KIND, MAY BE REJECTED BY THE CITY AS BEING NON-RESPONSIVE. NO CHANGES ARE TO BE MADE TO THE BID FORM. ANY CHANGES TO A BID AMOUNT MUST BE INITIALED BY THE AUTHORIZED PERSON SIGNING THE BID FORM.

The undersigned hereby proposes and agrees, if this bid is accepted by the City of Roanoke, to enter into a Contract with the City of Roanoke, Virginia, (hereafter - City or Owner) to furnish all equipment, materials, labor, and services necessary to perform the **Laurel Ridge Road / Lewiston Street Drainage Improvements Project, ITB No.16-08-10**, in accordance with the Contract Documents as prepared by or for the City.

The Project and the work, services, and materials for such Project are subject to a Virginia Department of Transportation (VDOT or Department) Standard Project Administration Agreement dated September 9, 2013, as amended, between VDOT and the City (VDOT Agreement or Department Agreement) and various VDOT, local, State and/or Federal terms and provisions as set forth therein or referred to therein and in the bid documents and/or any resultant contract documents. The VDOT UPC number is 108352, U000-128-R82.

The Bidder, by submission of this bid, hereby certifies that such Bidder has read all of the bid documents and such Bidder is making the certifications contained in and/or referred to in the bid documents and agrees to be bound by such certifications. Such Bidder further agrees that Bidder, if awarded a contract for this Project, shall provide the work, services, materials, and any other items as required by the bid documents and in compliance with such bid documents, including, but not limited to, any VDOT documents, local, State, and/or Federal rules, regulations, and/or procedures contained in the bid documents and/or any resultant contract, or referred to therein. Furthermore, if there is any conflict in any of the documents, the more stringent provisions shall take precedence unless otherwise required by VDOT, Federal, and/or State documents, regulations, rules, and/or procedures, in which case they will take precedence in that order unless otherwise required by law.

The quantities of work to be done at the unit prices indicated are approximate only and are intended principally to serve as a guide in evaluating bids. Subject to the constraints of the General Conditions and other Contract Documents, the quantities of work to be done and material furnished at the unit prices bid may be increased or decreased as considered necessary by the City to fully complete the Work as planned.

The Bid Form is separated into a Base Bid and Bid Alternate. Depending on the Contractor's pricing, the Bid Alternate may be awarded. The lowest responsive and responsible bidder shall be the bidder with the lowest combined bid of Base Bid and Bid Alternate, if awarded. For instance, if only the Base Bid is awarded then the award is based on the Base Bid value only. If the Base Bid and Bid Alternate are awarded then the award is based on the combined Base Bid and Bid Alternate value.

The City reserves the right to award with or without Bid Alternate in its sole discretion.

BASE BID SCHEDULE

ITEM DESCRIPTION	EST. QTY.	UNIT	UNIT PRICE	TOTAL AMOUNT
Mobilization	1	LS		
Construction Stakeout Survey	1	LS		
Maintenance of Traffic and Work Area Protection	1	LS		
Demolition	1	LS		
Asphalt Milling	4,400	SY		
Asphalt Paving/Overlay, VDOT SM-9.5D (with non-polishing aggregate)	500	Tons		
Tree Protection	6	EA		
Inlet Protection	9	EA		
Culvert Inlet Protection	1	EA		
Topsoil	160	CY		
Temporary Seeding	0.4	AC		
Permanent Seeding, Southern Lawn Mix	0.4	AC		

Stormwater Conveyance Channel 1A	79	LF		
Stormwater Conveyance Channel 1B	93	LF		
Stormwater Conveyance Channel 2	51	LF		
Dry Swale A, complete with underdrain	1	LS		
Dry Swale B, complete with underdrain	1	LS		
Dry Swale C, complete with underdrain	1	LS		
Dry Swale D, complete with underdrain	1	LS		
Curb and Gutter, VDOT CG-6	200	LF		
Storm Drain Pipe, 15” RCP	75	LF		
Storm Drain Pipe, 18” RCP	15	LF		
Storm Drain Pipe, 24” RCP	36	LF		
Storm Drain Pipe, 36” RCP	1,605	LF		
Storm Drain Structures, Drop Inlet	2	EA		
Storm Drain Structures, End Wall	1	EA		
Storm Drain Structures, 48” Manholes	9	EA		
Storm Drain Structures, 60” Manholes	2	EA		
Storm Drain Structures, 72” Manholes	1	EA		
24” Yard Drain	6	EA		
Storm Cleanout	5	EA		
Rock Removal	30	CY		
Water Main Adjustments	4	EA		
Water Meter Adjustments	4	EA		
Water Service Line Adjustments	30	LF		
	BASE BID TOTAL			**$**

BID ALTERNATE SCHEDULE

ITEM DESCRIPTION	EST. QTY.	UNIT	UNIT PRICE	TOTAL AMOUNT
Storm Drain Pipe Diff, 15” PP	75	LF		
Storm Drain Pipe Diff, 18” PP	15	LF		
Storm Drain Pipe Diff, 24” PP	36	LF		
Storm Drain Pipe Diff, 36” PP	1,605	LF		
	BID ALTERNATE TOTAL			**$**

BASE BID + BID ALTERNATE TOTAL	

The City may, in its sole discretion, award with or without the alternate work described herein.

The undersigned hereby acknowledges the receipt of the following addenda to the Contract Documents:

Addendum Number _____ Dated _____
Addendum Number _____ Dated _____
Addendum Number _____ Dated _____

The undersigned hereby agrees, if this bid is accepted by the City, to commence work with an adequate force and equipment on the date stipulated in the written "Notice to Proceed" from the City and to substantially complete the work within One Hundred and Eighty (180) consecutive calendar days from the date stipulated in the written "Notice to Proceed", and to achieve Final Acceptance within thirty (30) consecutive calendar days thereafter, and to pay as liquidated damages the sum of Three Hundred Dollars ($300) per day to the City of Roanoke for each consecutive calendar day in excess of the time indicated to substantially complete the work as indicated above and then to reach Final Acceptance as set forth above to fully and satisfactorily complete the Work. (See Section 21 of the General Conditions.)

By submitting a bid, the undersigned agrees it will not withdraw its bid during the time period provided for in the Invitation to Bid, except as provided for therein.

The undersigned agrees that if this bid is accepted by the City, the failure or refusal of the undersigned to execute the Contract with the City and furnish to the City the required bonds and certificates of insurance within fourteen (14) consecutive calendar days from receipt of the

Contract Documents may result in a payment of the Bid Security to the City as liquidated damages.

The attention of each bidder is directed to Code of Virginia, Sections 54.1-1100, et. seq., which requires certain licenses for contractors, tradesmen, and others. Each bidder is required to determine which license, if any, it is required to have under such sections.

Complete the following:

Bidder _____does have _____does not have a Virginia Contractor's License. (Check appropriate blank.)

If bidder has a Virginia Contractor's License, circle the class bidder has and list the number.
Licensed "Class A", "Class B", or "Class C" Virginia Contractor Number _____
Identify Specialty _____

If bidder has another type of Virginia License, please list the type and number:
Type of license: _____ Number: _____

Bidder is a ___ resident or ___ nonresident of Virginia. (Check appropriate blank. See Code of Virginia, Sections 54.1-1100, et. seq.)

The attention of each Bidder/Offeror is directed to Virginia Code Section 2.2-4311.2, which requires a bidder or offeror organized or authorized to transact business in the Commonwealth of Virginia pursuant to Title 13.1 or Title 50 of the Code of Virginia, as amended, or as otherwise required by law, shall include in its bid or proposal the Identification Number issued to such bidder or offeror by the Virginia State Corporation Commission (SCC). Furthermore, any bidder or offeror that is not required to be authorized to transact business in the Commonwealth of Virginia as a domestic or foreign business entity under Title 13.1 or Title 50 or as otherwise required by law shall include in its bid or proposal a statement describing why the bidder or offeror is not required to be so authorized. Please complete the following by checking the appropriate line that applies and providing the requested information:

A._____ Bidder/Offeror is a Virginia business entity organized and authorized to transact business in Virginia by the SCC and such bidder's/offeror's Identification Number issued to it by the SCC is _____.

B._____ Bidder/Offeror is an out-of-state (foreign) business entity that is authorized to transact business in Virginia by the SCC and such bidder's/offeror's Identification Number issued to it by the SCC is _____.

C._____ Bidder/Offeror does not have an Identification Number issued to it by the SCC and such bidder/offeror is not required to be authorized to transact business in Virginia by the SCC for the following reason(s):

_____
_____
_____

Please attach additional sheets of paper if you need more space to explain why such bidder/offeror is not required to be authorized to transact business in Virginia.

The undersigned states that it has made a best or good faith effort to seek the participation of and utilize local, Small, Minority-Owned, Women-Owned, and Service Disabled Veteran-Owned Businesses as suppliers and subcontractors whenever possible for this Project.

State the complete legal name of the bidder, exactly as it is recorded with the State Corporation Commission, if recorded there.

LEGAL NAME_____

BY_____ TITLE_____
(TYPED NAME:)

SIGNED NAME_____

DELIVERY ADDRESS_____

MAILING ADDRESS_____

CITY_____ STATE_____ ZIP CODE_____

TELEPHONE_____ FAX_____

CONTACT EMAIL ADDRESS _____

ESCROW ACCOUNT REQUESTED (if applicable): YES _____ NO _____

DELIVERY OF BIDS: See Section 7.1 of the Instructions to Bidders.

Monica Cole, Senior Buyer
Purchasing Division
215 Church Avenue, S.W.
Room 202, Noel C. Taylor Municipal Building
Roanoke, Virginia 24011

Place in lower left-hand corner of envelope the project title and ITB No. as indicated below. Place in the upper left-hand corner of the envelope the bidder's name and mailing address.

LAUREL RIDGE ROAD/LEWISTON STREET DRAINAGE IMPROVEMENTS PROJECT
ROANOKE, VIRGINIA
ITB NO. 16-08-10

REMAINDER OF PAGE INTENTIONALLY LEFT BLANK

CITY OF ROANOKE, VIRGINIA

BID BOND

KNOW ALL MEN BY THESE PRESENTS, THAT WE, THE UNDERSIGNED, _____ _____, as Principal, and _____ _____, as Surety, are hereby held and firmly bound unto _____, as City or Owner, in the penal sum of _____ _____($_____) for the payment of which, well and truly to be made, we hereby jointly and severally bind ourselves, our heirs, executors, administrators, successors and assigns. Signed, sealed, and delivered this _____ day of_____, 20_____.

The condition of the above obligation is such that whereas the Principal has submitted to the a certain bid, attached hereto and hereby made a part hereof, to enter a contract in writing for the _____ _____ _____.

NOW, THEREFORE, if the bid shall be rejected, or if the bid shall be accepted and the Principal shall execute and deliver to the City a Contract substantially in the Form of the Contract contained in the proposed Contract Documents, properly completed in accordance with the bid, and shall furnish any required bond(s) for Principal's faithful performance of the Contract and for the payment of all persons performing labor or furnishing materials in connection herewith within the specified time period, and shall in all other respects perform the agreement created by the acceptance of the bid, then this obligation shall be void, otherwise the same shall remain in force and effect; it being expressly understood and agreed that the liability of the Surety for any and all claims hereunder shall, in no event, exceed the penal amount of this obligation as herein stated.

The Surety, for value received, hereby stipulates and agrees that the obligations of the Surety and its bond shall be in no way impaired or affected by any extension of the time within which the City may accept such bid; and the Surety does hereby waive notice of any such extension.

This Bond shall be governed by, and construed in accordance with, the laws of the Commonwealth of Virginia, without application of Virginia's conflict of law provisions. Venue and any actions for any litigation, suits, and claims arising from or connected with this Bond and/or the Contract referred to herein shall only be proper in the Roanoke City Circuit Court, or in the Roanoke City General District Court if the amount in controversy is within the jurisdictional limit of such court, and all parties to this Bond and/or such Contract voluntarily submit themselves to the jurisdiction and venue of such courts, regardless of the actual location of such parties.

IN WITNESS WHEREOF, the Principal and the Surety have hereunder set their hands and seals, and such of them as are corporations have caused their corporate seals to be hereto affixed and these presents to be signed by their proper officers, the day and year first set forth above.

Attest: _____(SEAL)
Principal

_____ By_____
Title

Witness to signature of
Attorney-in-Fact: _____(SEAL)
Surety

_____ By_____
Witness Attorney-in-Fact

(Attorneys-in-fact affix seal and attach current original or certified copy of power of attorney.)

CITY OF ROANOKE, VIRGINIA

ESCROW AGREEMENT

(ONLY IF APPLICABLE)

THIS AGREEMENT ("Agreement"), made and entered into this _____ day of _____, 20_____ by, between and among the City of Roanoke, Virginia ("City" or "Owner"), _____ _____ ("Contractor"),

_____
(Name of Escrow Agent)

_____
(Address of Escrow Agent)

a trust company, bank, or savings and loan institution (hereinafter referred to collectively as "Escrow Agent") with its principal office located in the Commonwealth of Virginia ("Commonwealth") and _____ _____ ("Surety") provides:

I.

The City and the Contractor have entered into a contract dated _____ with respect to City of Roanoke ITB No. _____, for _____ _____ _____ ("the contract"). This Agreement is pursuant to, but in no way amends or modifies, the contract. Payments made hereunder or the release of funds from escrow shall not be deemed approval or acceptance of performance by the Contractor. Payments should be made to _____ _____and mailed to_____ _____ _____ (Name and Address of Escrow Agent).

II.

In order to assure full and satisfactory performance by the Contractor of its obligations under the contract, the City is required thereby to retain certain amounts otherwise due the Contractor. The Contractor has, with the approval of the City, elected to have these retained amounts held in escrow by the Escrow Agent. This agreement sets forth the terms of the escrow. The Escrow Agent shall not be deemed a party to, bound by, or required to inquire into the terms of, the contract or any other instrument or agreement between the City and the Contractor.

III.

The City shall from time to time pursuant to its contract pay to the Escrow Agent amounts retained by it under the contract. Except as to amounts actually withdrawn from escrow by the City, the Contractor shall look solely to the Escrow Agent for the payment of funds retained under the contract and paid by the City to the Escrow Agent.

The risk of loss by diminution of the principal of any funds invested under the terms of this contract shall be solely upon the Contractor.

Funds and securities held by the Escrow Agent pursuant to this Escrow Agreement shall not be subject to levy, garnishment, attachment, lien, or other process whatsoever. Contractor agrees not to assign, pledge, discount, sell or otherwise transfer or dispose of his interest in the escrow account or any part thereof, except to the Surety.

IV.

Upon receipt of checks drawn by the City and made payable to it as escrow agent, the Escrow Agent shall promptly notify the Contractor, negotiate the same and deposit or invest and reinvest the proceeds in approved securities in accordance with the written instructions of the Contractor. In no event shall the Escrow Agent invest the escrowed funds in any security not approved, as set forth in Section V. below.

V.

The following securities, and none other, are approved securities for all purposes of this Agreement:

(1) United States Treasury Bonds, United States Treasury Notes, United States Treasury Certificates of Indebtedness or United States Treasury Bills,

(2) Bonds, notes and other evidences of indebtedness unconditionally guaranteed as to the payment of principal and interest by the United States,

(3) Bonds or notes of the Commonwealth of Virginia,

(4) Bonds of the City of Roanoke, Virginia, if such bonds carried, at the time of purchase by the Escrow Agent or deposit by the Contractor, a Standard and Poor's or Moody's Investor Service rating of at least "A", and

(5) Certificates of deposit issued by commercial Banks located within the Commonwealth, including, but not limited to, those insured by the Escrow Agent and its affiliates.

(6) Any bonds, notes, or other evidences of indebtedness listed in Sections (1) through (3) may be purchased pursuant to a repurchase agreement with a bank, within or without the Commonwealth of Virginia having a combined capital, surplus and undivided profit of not less than $25,000,000, provided the obligation of the Bank to repurchase is within the time limitations established for investments as set forth herein. The repurchase agreement shall be considered a purchase of such securities even if title, and/or possession of such securities is not transferred to the Escrow Agent, so long as the repurchase obligation of the Bank is collateralized by the securities themselves, and the securities have on the date of the repurchase agreement a fair market value equal to at least 100% of the amount of the repurchase obligation of the Bank, and the securities are held by a third party, and segregated from other securities owned by the Bank.

No security is approved hereunder which matures more than five years after the date of its purchase by the Escrow Agent or deposit by the Contractor.

VI.

The Contractor may from time to time withdraw the whole or any portion of the escrowed funds by depositing with the Escrow Agent approved securities as set forth in Section V. above in an amount equal to, or in excess of, the amount so withdrawn. Any securities so deposited or withdrawn shall be valued at such time of deposit or withdrawal at the lower of par or market value, the latter as determined by the Escrow Agent. Any securities so deposited shall thereupon become a part of the escrowed fund.

Upon receipt of a direction signed by the City Manager or Assistant City Manager, the Escrow Agent shall pay the principal of the fund, or any specified amount thereof, to the City or the Contractor as the City may direct. If payment is to be made to the City, it shall be made in cash. However, if payment has been authorized to be made to the Contractor, the Contractor may specify to the Escrow Agent if payment is to be made in cash or in kind. Such payment and delivery shall be made as soon as is practicable after receipt of the direction.

VII.

For its services hereunder the Escrow Agent shall be entitled to a reasonable fee in accordance with its published schedule of fees or as may be agreed upon by the Escrow Agent and the Contractor. Such fee and any other costs of administration of this Agreement shall be paid from the income earned upon the escrowed fund and, if such income is not sufficient to pay the same, by the Contractor.

VIII.

The net income earned and received upon the principal of the escrowed fund shall be paid over to the Contractor in quarterly or more frequent installments. Until so paid or applied to pay the Escrow Agent's fee or any other costs of administration such income shall be deemed a part of the principal of the fund.

IX.

The Surety undertakes no obligation hereby but joins in this Agreement for the sole purpose of acknowledging that its obligations as surety for the Contractor's performance of the contract are not affected hereby.

X

This Escrow Agreement shall be governed by, and construed in accordance with, the laws of the Commonwealth of Virginia, without application of Virginia's conflict of law provisions. Venue and any actions for any litigation, suits, and claims arising from or connected with this Escrow Agreement and/or Contract referred to herein shall only be proper in the Roanoke City Circuit Court, or in the Roanoke City General District Court if the amount in controversy is within the jurisdictional limit of such court, and all parties to this Escrow Agreement and/or such Contract voluntarily submit themselves to the jurisdiction and venue of such courts, regardless of the actual location of such parties.

SIGNATURE PAGE TO FOLLOW

IN WITNESS WHEREOF, the parties hereto have signed this Escrow Agreement by their authorized representatives.

_____
Typed Name of Contractor

Attest: (if corporation)
Witness: (if individual)

_____

_____
President/Vice-President;
Partner or Owner (Seal)

_____
Typed Name of Escrow Agent

Attest:

_____
Bank Officer

_____
Vice President

_____
Typed Name of Surety Company

Witness:

_____

By:_____
Attorney-In-Fact

City of Roanoke, Virginia

Attest:

_____
City Clerk/Deputy City Clerk

_____
City Manager

Approved as to form:

_____
City Attorney/Assistant City Attorney

Approved as to execution:

_____
City Attorney/Assistant City Attorney

CITY OF ROANOKE, VIRGINIA

CONTRACT

THIS CONTRACT is dated _____, 20____, between _____ _____, hereinafter referred to as the "Contractor", and the City of Roanoke, Virginia, a Virginia municipal corporation, hereinafter referred to as the "City" or "Owner";

RECITALS:

WHEREAS, the Contractor has been awarded a contract by the City for

_____

_____

_____

_____,

all in a proper and timely manner and in accordance with the Contract Documents, hereinafter and in the Contract Documents referred to as the "Work"; [and]

[WHEREAS, the Contractor has entered into a performance and a payment bond, with surety, each in the penalty of One Hundred Percent (100%) of the Contract sum, payable to the City of Roanoke as required by the Contract Documents;]

[WHEREAS, this Project and the work, services, and materials for such Project are subject to a Virginia Department of Transportation (VDOT or Department) Standard Project Administration Agreement, dated September 9, 2013, between VDOT and the City (VDOT Agreement or Department Agreement), and various VDOT, Federal, State, and/or Local terms and provisions as set forth therein or referred to therein and in any of the Contract Documents and the Contractor agrees to comply with all such terms and provisions.]

THEREFORE, in consideration of the terms and provisions set forth herein, the Parties agree that the above Recitals are incorporated into this Contract and made a part hereof and the Parties further agree as follows:

ARTICLE 1. WORK TO BE PERFORMED AND DOCUMENTS.

For and in consideration of the sums of money hereinafter specified to be paid by the City to the Contractor for the Work provided for in this Contract and in the Contract Documents to be performed by the Contractor, the Contractor hereby covenants and agrees with the City to fully construct, perform, and complete the Work in a good and workmanlike manner in accordance with this Contract and the Contract Documents to produce a fully functional and properly operating project within the time stipulated, time being made of the essence of this Contract. It is also agreed by the parties hereto that the Contract Documents consist of this Contract and those items set forth in the definition of Contract Documents in Section 1 of the General Conditions and includes the following, all of which are and constitute a part of this Contract as if attached hereto or set out in full herein, viz:

Invitation to Bid contained in the Project Manual dated March 4, 2016.

Instructions to Bidders dated May 1, 2014.

General Conditions dated May 1, 2014.

Supplemental General Conditions, if any, as contained in the Project Manual dated March 4, 2016.

Addendum No. _____ dated _____.

Plans and Drawings as contained or listed in the Project Manual dated March 4, 2016.

Specifications as contained in the Project Manual dated March 4, 2016.

Special Conditions or similar documents, if any, as may be contained in the Project Manual dated March 4, 2016.

Bid Form completed by Contractor for this project.

[Ordinance No. _____ adopted _____.]

Contractor's Performance Security.

Contractor's Labor and Material Payment Security.

[Escrow Agreement, if any.]

[The terms, conditions, and provisions as contained in the [VDOT, HUD, CDBG or other Contract or Agreement] dated September 9, 2013, between the City and VDOT.]

ARTICLE 2. CONTRACT AMOUNT.

The City agrees to pay the Contractor for the Contractor's complete, timely, and satisfactory performance of the Work, in the manner and at the times set out in the Contract Documents the Contract Amount (or Sum) of _____ Dollars ($_____), as provided for in the Contract Documents and as the Contract Amount may be increased or decreased by additions and/or reductions in the Work or as the Contract Amount may be decreased by the City's assessment of liquidated damages against Contractor, or by setoff or as provided for in the Contract Documents or as allowed by law.

ARTICLE 3. TIME OF COMMENCEMENT AND COMPLETION.

The Contractor shall commence the Work to be performed under this Contract on such date as is established and fixed for such commencement by written notice to proceed given by the Director, Department of Public Works to the Contractor, and the Contractor covenants and agrees to properly construct, perform, and substantially complete the Work within _____ (_____) consecutive calendar days after the date of commencement fixed and established by such notice, and to achieve Final Acceptance within thirty (30) consecutive calendar days thereafter. The Contractor further agrees that the Work shall be started promptly upon receipt of such notice and shall be prosecuted regularly,

diligently, and uninterruptedly at a rate of progress that will ensure full completion thereof in the shortest length of time consistent with the Contract Documents.

ARTICLE 4. LIQUIDATED DAMAGES.

City and Contractor recognize that time is of the essence in the completion of the Work and that the City will suffer loss or damages if the Work is not completed within the period of time stipulated above, plus any extensions thereof allowed in accordance with the General Conditions. The parties also recognize the delays, expense, and difficulties involved in proving the actual loss or damages suffered by City if the Work is not completed on time. Accordingly, if such Work is not fully and satisfactorily substantially completed within the period of time set forth in Article 3, the Contractor agrees it shall owe to and pay to City as liquidated damages for loss of City's full use or occupancy of the Work, but not as a penalty, the sum of _____ Dollars ($_____) for each consecutive calendar day during which substantial completion of the Work is delayed or exceeds the date of substantial completion identified in Article 3 of this Contract to complete the Work and then to reach Final Acceptance as set forth above to fully and satisfactorily complete the Work. Provided, however, if Final Acceptance is not achieved by the Contractor within such additional time period, then the above mentioned sum of liquidated damages shall be due and paid by the Contractor to the City as additional liquidated damages for each consecutive calendar day Contractor does not achieve such Final Acceptance. Liquidated damages are defined in Section 21 of the General Conditions. Contractor further agrees that any liquidated damages City assesses against Contractor may also be withheld by City from any retainage or other sums City may otherwise owe to Contractor. Contractor hereby waives any defense as to the validity of any liquidated damages stated herein on the grounds such liquidated damages could be void as penalties or are not reasonably related to actual damages. All such liquidated damages are in addition to any other damages the City may be entitled to recover from Contractor.

ARTICLE 5. PAYMENT FOR WORK.

Construction estimates for payment, including the final payment request, submitted by the Contractor shall be in accordance with the provisions of Sections 20, 21, and 22 of the General Conditions and such other provisions of the Contract Documents that may be applicable. Final payment will not be made until the Work has been fully and satisfactorily completed, the Contract duly performed, and a Certificate of Final Acceptance has been issued by the Director, Department of Public Works, all as provided for in the Contract Documents.

ARTICLE 6. NONWAIVER.

Contractor agrees that the City's waiver or failure to enforce or require performance of any term or condition of this Contract or the City's waiver of any particular breach of this Contract by the Contractor extends to that instance only. Such waiver or failure is not and shall not be a waiver of any of the terms or conditions of this Contract or a waiver of any other breaches of the Contract by the Contractor and does not bar the City from requiring the Contractor to comply with all the terms and conditions of the Contract and does not bar the City from asserting any and all rights and/or remedies it has or might have against the Contractor under this Contract or by law.

ARTICLE 7. FORUM SELECTION AND CHOICE OF LAW.

This Contract shall be governed by, and construed in accordance with, the laws of the Commonwealth of Virginia, without application of Virginia's conflict of law provisions. Venue and any actions for any litigation, suits, and claims arising from or connected with this Contract shall only be proper in the Roanoke City Circuit Court, or in the Roanoke City General District Court if the amount in controversy is within the jurisdictional limit of such court, and all parties to this Contract voluntarily submit themselves to the jurisdiction and venue of such courts, regardless of the actual location of such parties.

ARTICLE 8. SEVERABILITY.

If any provision of this Contract, or the application of any provision hereof to a particular entity or circumstance, shall be held to be invalid or unenforceable by a court of competent jurisdiction, the remaining provisions of the Contract shall not be affected and all other terms and conditions of the Contract shall be valid and enforceable to the fullest extent permitted by law.

ARTICLE 9. NONDISCRIMINATION.

A. During the performance of this Contract, the Contractor agrees as follows:

1. The Contractor will not discriminate against any Subcontractor, employee, or applicant for employment because of race, religion, color, sex, national origin, age, disability, or any other basis prohibited by State law relating to discrimination in employment, except where there is a bona fide occupational qualification reasonably necessary to the normal operation of the Contractor. The Contractor agrees to post in conspicuous places, available to employees and applicants for employment, notices setting forth the provisions of this nondiscrimination clause.

2. The Contractor, in all solicitations or advertisements for employees placed by or on behalf of the Contractor, will state that such Contractor is an equal employment opportunity employer.

3. Notices, advertisements, and solicitations placed in accordance with federal law, rule, or regulation shall be deemed sufficient for the purpose of meeting the requirements of this section.

B. The Contractor will include the provisions of the foregoing Subsections A (1), (2), and (3) in every subcontract or purchase order of over $10,000, so that the provisions will be binding upon each subcontractor or vendor.

ARTICLE 10. FAITH-BASED ORGANIZATIONS.

Pursuant to the Code of Virginia, Section 2.2 - 4343.1, be advised that the City of Roanoke does not discriminate against faith-based organizations.

ARTICLE 11. COMPLIANCE WITH FEDERAL IMMIGRATION LAW.

Contractor agrees that Contractor does not, and shall not during the performance of this Contract, knowingly employ an unauthorized alien as defined in the federal Immigration Reform and Control Act of 1986.

ARTICLE 12. COMPLIANCE WITH STATE LAW, FOREIGN AND DOMESTIC BUSINESSES AUTHORIZED TO TRANSACT BUSINESS IN THE COMMONWEALTH OF VIRGINIA.

Contractor shall comply with the provisions of Virginia Code Section 2.2-4311.2, as amended, which provides that a contractor organized as a stock or nonstock corporation, limited liability company, business trust, or limited partnership or registered as a registered limited liability partnership shall be authorized to transact business in the Commonwealth as a domestic or foreign business entity if so required by Title 13.1 or Title 50 or as otherwise required by law. Contractor shall not allow its existence to lapse or its certificate of authority or registration to transact business in the Commonwealth, if so required under Title 13.1 or Title 50, to be revoked or cancelled at any time during the term of the Contract. The City may void the Contract if the Contractor fails to remain in compliance with the provisions of this section.

ARTICLE 13. CONTRACT SUBJECT TO FUNDING.

This Contract is or may be subject to funding and/or appropriations from federal, state and/or local governments and/or agencies and/or from the Council of the City of Roanoke. If any such funding is not provided, withdrawn, or otherwise not made available for this Contract, the Contractor agrees that the City may terminate this Contract on 7 days written notice to Contractor, without any penalty or damages being incurred by the City. Contractor further agrees to comply with any applicable requirements of any grants and/or agreements providing for such funding.

ARTICLE 14 . HEADINGS.

The captions and headings in this Contract are for convenience and reference purposes only and shall not affect in any way the meaning and interpretation of this Contract.

ARTICLE 15. COUNTERPART COPIES.

This Contract may be executed in any number of counterpart copies, each of which shall be deemed an original, but all of which together shall constitute a single instrument.

ARTICLE 16. CONSTRUCTION OF TERMS.

The terms and conditions in all parts of this Contract shall be in all cases construed according to their fair meaning and not strictly for or against any party.

[ARTICLE 17. COMPLIANCE WITH VDOT AGREEMENT AND OTHER DOCUMENTS.

A. Contractor shall fully, properly, and timely provide and perform all the Work, services, materials, and other items required for this Project in accordance with the Contract, including the VDOT Agreement (a copy of which is attached as Exhibit A to this Contract), Federal, State, and/or Local documents included or referred to in the bid documents and/or this Contract, and in the ITB. Such VDOT Agreement is hereby deemed a part of this Contract for this Project and is binding on the Contractor. Notwithstanding anything else in the ITB and/or in the Contract, the Contractor is advised and shall at all times comply with the VDOT Agreement and all applicable terms, provisions, and requirements of any VDOT, Federal, State, and/or Local documents, rules, regulations, policies, procedures, and directives, as they now exist or may be amended or promulgated from time to time during the term of this Contract, including without limitation those listed directly and/or by reference in the Contract and Contract Documents. The Contractor's failure to so comply shall constitute a material breach of this Contract. Furthermore, if the Contractor discovers that there are any conflicts between the terms and provisions of any Contract Documents, the Contractor shall immediately notify the Director, Department of Public Works, in writing, of any such conflict(s). However, the provisions of the VDOT Agreement are intended to be and shall be construed to be consistent with all other terms and provisions in the Contract and the Contract Documents, but if a court or agency of competent jurisdiction determines that a conflict should exist between them, and to the extent of any such conflict, the more stringent requirements shall apply unless otherwise required by the rules, regulations, and/or procedures of VDOT, the law, or the Federal and/or State agencies involved in the Project, in which case those items will take precedence in that order unless otherwise required by law. Furthermore, Contractor shall incorporate this Contract and the VDOT Agreement into all subcontracts and tiers of subcontractors for this Project.

B. Recovery of funds paid for unauthorized and/or unapproved Work. Contractor shall repay to the City any funds Contractor may have received for any Work, services, and/or materials Contractor provided and/or performed for this Project if any such items were not properly authorized and approved by the City, VDOT, and any other approving local, State, or Federal agency, and/or for any funds the City may have to repay to VDOT and/or any Federal or State agency due to the actions and/or omissions of the Contractor, including but not limited to, any reporting or record keeping requirements.

C. Incorporation of VDOT, Federal, State, and/or Local terms. The Contract terms and provisions include certain standard terms and conditions required by VDOT, Federal, State, and/or Local agencies, whether or not expressly set forth in the Contract provisions. All contractual provisions required by VDOT, Federal, State, and/or Local agencies involved in this Project are hereby incorporated by reference. Anything to the contrary notwithstanding, all Federal, VDOT, State, and/or Local mandated terms shall be deemed to control in the event of a conflict with other provisions contained in the Contract with the order of precedence being in that order unless otherwise required by law. The Contractor agrees to and shall not perform any act, fail to perform any act, or refuse to comply with any request that would cause the City to be in violation of any Federal, VDOT, State, and/or Local terms and conditions.]

ARTICLE 18. ENTIRE CONTRACT.

This Contract, including any attachments, exhibits, and referenced documents, constitutes the complete understanding between the parties. This Contract may be modified only by written agreement properly executed by the parties.

SIGNATURE PAGE TO FOLLOW

IN WITNESS WHEREOF, the parties hereto have signed this Contract by their authorized representatives.

Attest/Witness:

_____
Typed Legal Name of Contractor

_____

By _____
President/Vice-President; Partner or Owner

_____
Typed or Printed Name and Title

_____
Typed or Printed Name and Title

(Contractor's Corporate Seal)

Attest/Witness:

CITY OF ROANOKE, VIRGINIA

_____

By _____

_____
Typed or Printed Name and Title

_____
Typed or Printed Name and Title

Appropriation and Funds Required
for this Contract Certified

Approved as to form:

_____
Director/Deputy Director of Finance

_____
City Attorney/Assistant City Attorney

Date: _____

Account #: _____

Approved as to execution:

_____
City Attorney/Assistant City Attorney

PROGRAMMATIC PROJECT ADMINISTRATION AGREEMENT
Revenue Sharing Projects

08-26-13A10:39 RCVD

THIS AGREEMENT, made and executed in triplicate this 9th day of September 2013, by and between the City of Roanoke, Virginia, hereinafter referred to as the LOCALITY and the Commonwealth of Virginia, Department of Transportation, hereinafter referred to as the DEPARTMENT.

WHEREAS, the LOCALITY may, in accordance with §33.1-23.05 of the *Code of Virginia* (1950), as amended (the *Code*), and Commonwealth Transportation Board (CTB) policy, submit application(s) for Revenue Sharing funding and may also administer projects approved for Revenue Sharing funding by the CTB; and

WHEREAS, Appendix A documents the funding allocated to each Project and shall be developed and included as an attachment to this agreement. Such attachment may be amended, revised or removed or an additional Appendix A may be added as additional projects or funding is approved by the CTB and allocated to the LOCALITY to finance the Project(s) within the term of this Agreement without the need to execute an additional project administration agreement; and

WHEREAS, current and future projects approved for Revenue Sharing funding by the CTB within the term of this agreement and subject to the terms and conditions specified herein shall be identified on a list which will be included as an attachment to this Agreement as Appendix B. Such attachment may be amended as additional projects are approved by the CTB and shall be signed by an authorized LOCALITY and VDOT official, without the need to execute an additional project administration agreement. If any active project with an existing agreement is incorporated herein, the original project agreement shall automatically terminate upon inclusion in this programmatic agreement of an updated Appendix A and an amended Appendix B to reflect that project; and

WHEREAS, both parties have concurred in the LOCALITY's administration of the phase(s) of work for the respective Project(s) listed in the attachments in accordance with applicable federal, state and local laws and regulations and that the locality will certify compliance with those laws and regulations as prescribed by the Department.

NOW THEREFORE, in consideration of the mutual premises contained herein, the parties hereto agree as follows:

1. This agreement shall be effective for an initial period of THREE fiscal years and may be extended by an addendum signed by each party for one additional term of THREE fiscal years unless a change in policy or the *Code* necessitates a change in terms and conditions before the term of this agreement shall have passed. This Agreement shall NOT extend beyond SIX fiscal years. In the event that a new agreement becomes necessary during the life of this Agreement, Appendix A and Appendix B may be incorporated within the new approved agreement upon mutual agreement by both parties.

2. The LOCALITY shall:

a. Be responsible for all activities necessary to complete the noted phase(s) of each Project shown on the Appendix B and on the respective Project's Appendix A, except for activities, decisions, and approvals which are the responsibility of the DEPARTMENT, as required by federal or state laws and regulations or as otherwise agreed to, in writing, between the parties.

b. Receive individual prior written authorization from the DEPARTMENT to proceed with each project.

c. Administer the Project(s) in accordance with guidelines applicable to state funded Locally Administered Projects as published by the DEPARTMENT.

d. Provide certification by a LOCALITY official of compliance with applicable laws and regulations on the State Certification Form for State aid projects or in another manner as prescribed by the DEPARTMENT for each project included in Appendix B.

e. Maintain accurate and complete records of each Project's development of all expenditures and make such information available for inspection or auditing by the DEPARTMENT. Records and documentation for items for which reimbursement will be requested shall be maintained for not less than three (3) years following acceptance of the final voucher on each Project.

f. No more frequently than monthly, submit invoices with supporting documentation to the DEPARTMENT in the form prescribed by the DEPARTMENT. The supporting documentation shall include copies of related vendor invoices paid by the LOCALITY and also include an up-to-date Project summary and schedule tracking payment requests and adjustments.

g. Reimburse the DEPARTMENT all Project expenses incurred by the DEPARTMENT if, due to action or inaction solely by the LOCALITY, the project becomes ineligible for state reimbursement, or in the event the reimbursement provisions of Section 33.1-44 or Section 33.1-70.01 of the *Code*, or other applicable provisions of state law or regulations require such reimbursement.

h. Pay the DEPARTMENT the LOCALITY's matching funds for eligible Project expenses incurred by the DEPARTMENT in the performance of activities set forth in paragraph 3.a.

i. Administer the Project in accordance with all applicable federal, state, and local laws and regulations. Failure to fulfill these obligations may result in the forfeiture of state-aid reimbursements. DEPARTMENT and LOCALITY staffs will work together to cooperatively resolve any issues that are identified so as to avoid any forfeiture of state-aid funds.

j. If legal services other than those provided by staff counsel are required in connection with condemnation proceedings associated with the acquisition of Right-of-Way, the LOCALITY will consult the DEPARTMENT to obtain an attorney from the list of outside counsel approved by the Office of the Attorney General. Costs associated with outside counsel services shall be reimbursable expenses of the project.

k. For projects on facilities not maintained by the DEPARTMENT, provide, or have others provide, maintenance of the Project upon completion, unless otherwise agreed to by the DEPARTMENT.

3. The DEPARTMENT shall:

a. Perform any actions and provide any decisions and approvals which are the responsibility of the DEPARTMENT, as required by federal or state laws and regulations or as otherwise agreed to, in writing, between the parties.

b. Upon receipt of the LOCALITY's invoices pursuant to paragraph 2.f, reimburse the LOCALITY the cost of eligible Project expenses, as described in Appendix A. Such reimbursements shall be payable by the DEPARTMENT within 30 days of an acceptable submission by the LOCALITY.

c. If appropriate, submit invoices to the LOCALITY for the LOCALITY's share of eligible Project expenses incurred by the DEPARTMENT in the performance of activities pursuant to paragraph 2.a.

d. Audit the LOCALITY's Project records and documentation as may be required to verify LOCALITY compliance with applicable laws and regulations.

e. Make available to the LOCALITY guidelines to assist the parties in carrying out responsibilities under this Agreement.

4. Appendix A identifies the specific funding sources for each Project under this Agreement, phases of work to be administered by the LOCALITY, and additional project-specific requirements agreed to by the parties. There may be additional elements that, once identified, shall be addressed by the parties hereto in writing, which may require an amendment to this Agreement.

5. If designated by the DEPARTMENT, the LOCALITY is authorized to act as the DEPARTMENT's agent for the purpose of conducting survey work pursuant to Section 33.1-94 of the *Code*.

6. Nothing in this Agreement shall obligate the parties hereto to expend or provide any funds in excess of funds agreed upon in this Agreement or as shall have been included in an annual or other lawful appropriation. In the event the cost of a Project under this agreement is anticipated to exceed the allocation shown for such Project on the respective Appendix A, both parties agree to cooperate in providing additional funding for the Project or to terminate the Project before its cost exceeds the allocated amount, however

the DEPARTMENT and the LOCALITY shall not be obligated to provide additional funds beyond those appropriated pursuant to an annual or other lawful appropriation.

7. Nothing in this agreement shall be construed as a waiver of the LOCALITY's or the Commonwealth of Virginia's sovereign immunity.

8. The Parties mutually agree and acknowledge, in entering this Agreement, that the individuals acting on behalf of the Parties are acting within the scope of their official authority and the Parties agree that neither Party will bring a suit or assert a claim against any official, officer, or employee of either party, in their individual or personal capacity for a breach or violation of the terms of this Agreement or to otherwise enforce the terms and conditions of this Agreement. The foregoing notwithstanding, nothing in this subparagraph shall prevent the enforcement of the terms and conditions of this Agreement by or against either Party in a competent court of law.

9. The Parties mutually agree that no provision of this Agreement shall create in the public, or in any person or entity other than parties, rights as a third party beneficiary hereunder, or authorize any person or entity, not a party hereto, to maintain any action for, without limitation, personal injury, property damage, breach of contract, or return of money, or property, deposit(s), cancellation or forfeiture of bonds, financial instruments, pursuant to the terms of this of this Agreement or otherwise. Notwithstanding any other provision of this Agreement to the contrary, unless otherwise provided, the Parties agree that the LOCALITY or the DEPARTMENT shall not be bound by any agreements between either party and other persons or entities concerning any matter which is the subject of this Agreement, unless and until the LOCALITY or the DEPARTMENT has, in writing, received a true copy of such agreement(s) and has affirmatively agreed, in writing, to be bound by such Agreement.

10. This agreement may be terminated by either party upon 30 days advance written notice. Eligible Project expenses incurred through the date of termination shall be reimbursed in accordance with paragraphs 2.f, 2.g, and 3.b, subject to the limitations established in this Agreement and Appendix A. Should the LOCALITY unilaterally cancel a project agreement, the LOCALITY shall reimburse the DEPARTMENT all state funds reimbursed and expended in support of the project, unless otherwise mutually agreed-upon prior to termination.

THE LOCALITY and DEPARTMENT acknowledge and agree that this Agreement has been prepared jointly by the parties and shall be construed simply and in accordance with its fair meaning and not strictly for or against any party.

THE LOCALITY and the DEPARTMENT further agree that should Federal-aid Highway funds be added to any project, this agreement is no longer applicable to that project and the applicable Appendix A shall be removed from this agreement and the Standard Project Administration Agreement for Federal-aid Projects executed for that project.

THIS AGREEMENT, when properly executed, shall be binding upon both parties, their successors, and assigns.

THIS AGREEMENT may be modified in writing by mutual agreement of both parties.

IN WITNESS WHEREOF, each party hereto has caused this Agreement to be executed as of the day, month, and year first herein written.

CITY OF ROANOKE, VIRGINIA:
Authorized by Resolution No. 39730-080513

By: _____

Christopher P. Morrill
Typed or printed name of signatory

City Manager _____ 8/21/13
Title Date

Cecelia F. McCoy _____ 8/21/13
Signature of Witness Date

NOTE: The official signing for the LOCALITY must attach a certified copy of his or her authority to execute this agreement.

COMMONWEALTH OF VIRGINIA, DEPARTMENT OF TRANSPORTATION:

_____ 9/9/13
Commissioner of Highways Date
Commonwealth of Virginia
Department of Transportation

Carol A. Matthews _____ 9/9/13
Signature of Witness Date

Attachments
Appendix A (for each project covered under this Agreement)
Appendix B (listing Project(s) covered under this Agreement)

Appropriation and Funds Required
for this Contract Certified

For _____
City Director of Finance
Date: 8/20/13
Account No.: Various Accounts

Approved as to Form:
Mary F. Zegeerbamp
Assistant City Attorney 8-15-13

CITY OF ROANOKE, VIRGINIA

CONTRACTOR'S PERFORMANCE BOND

KNOW ALL MEN BY THESE PRESENTS:

that _____

_____

_____
(Insert full name or legal title and address of Contractor)

as Principal, (hereinafter referred to as "Contractor"),

and _____

_____

_____
(Insert full name or legal title and address of Surety)

Telephone: _____ Fax: _____

as Surety (hereinafter referred to as "Surety"), are held and firmly bound unto the City of Roanoke, Virginia, a municipal corporation, 215 Church Avenue, S.W., Noel C. Taylor Municipal Building, Room 354, Roanoke, Virginia 24011, as Obligee (hereinafter referred to as "City" or "Owner"), in the amount of _____
_____
Dollars ($_____), for the payment whereof Contractor and Surety bind themselves, their heirs, executors, administrators, successors, and assigns, jointly and severally, firmly by these presents to the terms of this bond.

WHEREAS, Contractor has entered into a Contract with the City dated _____, 20_____, incorporating certain specifications and drawings prepared by:

_____

_____

_____
(Insert full name or legal title and address)

(which Contract, specifications, drawings, and other Contract Documents are hereinafter referred to collectively as the "Contract") for a fully functional and properly operating project, namely _____
_____
_____,
all in a proper and timely manner and in accordance with the Contract Documents, which Contract is expressly incorporated herein by reference and made a part of this bond.

NOW, THEREFORE, THE CONDITION OF THIS OBLIGATION is such that if the Contractor shall promptly and faithfully perform the Contract, in strict conformity with each and every requirement of the Contract, then this obligation shall be null and void; otherwise, this Performance Bond shall remain in full force and effect and is subject to the following conditions:

a. Any alteration which may be made in the terms of the Contract, including, without limitation, the amount to be paid or the work to be done under it, or the giving by the City of any extension of time for the performance of the Contract or any other forbearance of any nature whatsoever on the part of either the City or the Contractor to the other shall not in any way release the Contractor and the Surety, or either of them, their heirs, executors, administrators, successors, or assigns from their liability hereunder, and notice of such alteration, extension, or forbearance is hereby expressly waived by Surety.

b. IT IS NOT INTENDED BY ANY OF THE PROVISIONS OF ANY PART OF THIS BOND TO CONFER A BENEFIT UPON ANY OTHER PERSON OR ENTITY NOT A PARTY TO THIS PERFORMANCE BOND OR TO AUTHORIZE ANY PERSON OR ENTITY NOT A PARTY TO THIS BOND TO MAINTAIN A SUIT PURSUANT TO THE TERMS OR PROVISIONS OF THIS BOND OTHER THAN THE CITY OR ITS SUCCESSORS OR ASSIGNS.

c. This Bond shall be governed by, and construed in accordance with, the laws of the Commonwealth of Virginia, without application of Virginia's conflict of law provisions. Venue and any actions for any litigation, suits, and claims arising from or connected with this Bond and/or the Contract referred to herein shall only be proper in the Roanoke City Circuit Court, or in the Roanoke City General District Court if the amount in controversy is within the jurisdictional limit of such court, and all parties to the Bond and/or Such Contract voluntarily submit themselves to the jurisdiction and venue of such courts, regardless of the actual location of such parties.

d. Any suit under this bond must be instituted within one (1) year after (i) completion of the Contract, including the expiration of all warranties and guarantees, or (ii) discovery of the defect or breach of warranty, if the action be for such, whichever period is longer.

SIGNED AND SEALED this ____ day of _____, 20_____, in the presence of:

WITNESS: _____
CONTRACTOR

By:_____ (Seal)

_____ _____
(Type Name and Title)

WITNESS: _____
SURETY

By:_____ (Seal)
Attorney-in-Fact

_____ _____
(Type Name and Title)

(Attorneys-in-fact affix seal and attach original or certified copy of current power of attorney.)

CITY OF ROANOKE, VIRGINIA

CONTRACTOR'S LABOR AND MATERIAL PAYMENT BOND

KNOW ALL MEN BY THESE PRESENTS:

that _____

_____

_____
(Insert full name or legal title and address of Contractor)

as Principal, (hereinafter referred to as "Contractor"),

and _____

_____

_____
(Insert full name or legal title and address of Surety)

Telephone: _____ Fax: _____

as Surety (hereinafter referred to as "Surety"), are held and firmly bound unto the City of Roanoke, Virginia, a municipal corporation, 215 Church Avenue, S.W., Noel C. Taylor Municipal Building, Room 354, Roanoke, Virginia 24011, as Obligee (hereinafter referred to as "City" or "Owner"), for the use and benefit of Claimants as herein below defined, in the amount of _____ _____ Dollars ($_____), for the payment whereof Contractor and Surety bind themselves, their heirs, executors, administrators, successors, and assigns, jointly and severally, firmly by these presents to the terms of this bond.

WHEREAS, Contractor has entered into a Contract with the City dated _____, 20_____, incorporating certain specifications and drawings prepared by:

_____

_____

_____
(Insert full name or legal title and address)

(which Contract, specifications, drawings, and other Contract Documents are hereinafter referred to collectively as the "Contract") for providing a fully functional and properly operating project, namely _____ _____ _____, all in a proper and timely manner and in accordance with the Contract Documents, which Contract is expressly incorporated herein by reference and made a part of this bond.

NOW, THEREFORE, THE CONDITION OF THIS OBLIGATION is such that if the Contractor shall promptly make payment to all Claimants, as hereinafter defined, for all material furnished or labor supplied or performed in the prosecution of the work provided for in the Contract, then this obligation shall be void; otherwise this Labor and Material Payment Bond shall remain in full force and effect and is subject to the following conditions:

a. Any alteration which may be made in the terms of the Contract, including, without limitation, the amount to be paid or the work to be done under it, or the giving by the City of any extension of time for the performance of the Contract or any other forbearance of any nature whatsoever on the part of either the City or the Contractor to the other shall not in any way release the Contractor and the Surety, or either of them, their heirs, executors, administrators, successors, or assigns from their liability hereunder, and notice of such alteration, extension, or forbearance is hereby expressly waived by Surety.

b. A Claimant is defined as one who has and fulfills a contract to supply labor or materials, or both, to the Contractor or to any of the Contractor's subcontractors, in the prosecution of work provided for in the Contract, labor and material being construed to include, without limitation, public utility services and reasonable rentals of equipment, but only for periods when the equipment rented is actually used at the site, or who may otherwise be allowed by law to file a claim against the Contractor and/or Surety.

c. The Contractor and Surety hereby jointly and severally agree with City that every Claimant, as defined in paragraph b, **who has a direct contractual relationship with the Contractor and** who has performed labor or furnished material in accordance with the Contract in the prosecution of the work provided for in the Contract and who has not been paid in full therefore before the expiration of ninety (90) days after the day on which such Claimant performed the last such labor or furnished the last of such materials for which Claimant claims payment, or as may otherwise be allowed by law, may bring an action on this payment bond to recover any amount due Claimant for such labor or material, and may prosecute such action to final judgment and have execution on the judgment. The Contractor and Surety expressly agree that City shall not be liable for the payment of any judgment, costs, or expenses resulting from any such suit and that neither Contractor nor Surety shall cause City to be named as a party in any such suit.

d. The Contractor and Surety hereby jointly and severally agree with City that every Claimant, as defined in paragraph b, who has direct contractual relationship with any subcontractor, but who has no contractual relationship, express or implied, with such Contractor, may bring an action on this bond only if the Claimant has given written notice to the Contractor within **ninety (90)** days from the day on which the Claimant performed the last of the labor or furnished the last of the materials for which payment is claimed, stating with substantial accuracy the amount claimed and the name of the person for whom the work was performed or to whom the material was furnished, or as may otherwise be allowed by law. **Notice to the Contractor shall be given as set forth in Virginia Code §2.2-4341 and Claimants are advised to review such Code Section.** The Contractor and Surety expressly agree that City shall not be liable for the payment of any judgment, costs, or expenses resulting from any such suit and that neither Contractor nor Surety shall cause City to be named as a party in any such suit.

e. This Bond shall be governed by, and construed in accordance with, the laws of the Commonwealth of Virginia, without application of Virginia's conflict of law provisions. Venue and any actions for any litigation, suits, and claims arising from or connected with this Bond and/or the Contract referred to herein shall only be proper in the Roanoke City Circuit Court, or in the Roanoke City General District Court if the amount in controversy is within the jurisdictional limit of such court, and all parties to this Bond and/or such Contract voluntarily submit themselves to the jurisdiction and venue of such courts, regardless of the actual location of such parties.

f. Any suit or action hereunder shall be brought within one year after the day on which the person bringing such action last performed labor or last furnished or supplied materials, or within such other time period as may be allowed by law, whichever is longer.

SIGNED AND SEALED this ____ day of _____, 20_____, in the presence of:

_____
CONTRACTOR

WITNESS:

By:_____ (Seal)

_____ _____
(Type Name and Title)

_____
SURETY

WITNESS:

By:_____(Seal)
Attorney-In-Fact

_____ _____
(Type Name and Title)

(Attorneys-in-fact affix seal and attach current original or certified copy of power of attorney.)

CITY OF ROANOKE, VIRGINIA

CERTIFICATE OF SUBSTANTIAL COMPLETION

The Date of Substantial Completion of the Work or designated portion thereof is the Date certified by the Director, Department of Public Works when construction is sufficiently complete, in accordance with the Contract Documents, so the City of Roanoke, Virginia (City or Owner) can occupy or utilize the Work or designated portion thereof for the use for which it is intended, as expressed in the Contract Documents.

ITB NO.: _____

PROJECT: _____

CONTRACTOR: _____

PROJECT OR DESIGNATED PORTION SHALL INCLUDE: _____

_____

_____.

The Work or portion thereof designated above performed under this Contract has been reviewed and found to be substantially complete. The Date of Substantial Completion of the Project or portion thereof designated above is hereby established as _____. The City will assume possession thereof at _____ a.m./p.m. on that date.

A list of items ("punch list"), prepared by the A/E and/or Director, Department of Public Works, to be completed or corrected by the Contractor, is attached hereto. The failure to include any items on such list does not alter the responsibility of the Contractor to complete all Work in accordance with the Contract Documents. The Contractor will complete any portion of the Work that is not substantially complete and will complete or correct the work on the punch list in accordance with the Contract Documents.

The establishment of a date of substantial completion and/or the acceptance of the Work or designated portion thereof does not relieve the Contractor of any responsibility for any faulty materials or workmanship or operate to relieve the Contractor or its Surety from any obligation under the Contract with the City or the Performance Bond or Labor and Material Payment Bond.

This Certificate is subject to the terms and conditions of the Contract Documents, including but not limited to Section 20.8 of the General Conditions.

_____	_____	_____
Contractor	By	Date
City of Roanoke, Virginia	_____	_____
City	By	Date

CITY OF ROANOKE, VIRGINIA

AFFIDAVIT OF PAYMENT OF CLAIMS

By: _____

_____

_____
(Insert Exact Name and Address of Firm)

This day _____ personally appeared before me, _____, a Notary Public in and for the City (County) of _____, and, being by me first duly sworn states that all subcontractors and suppliers of labor and materials have been paid all sums due them for work performed or materials furnished in the performance of the Contract between the City of Roanoke, Virginia, and _____,Contractor, dated _____, 20_____, for

_____

_____

or arrangements have been made by the Contractor satisfactory to such subcontractors and suppliers with respect to the payment of such sums as may be due from the Contractor to the subcontractors and suppliers.

CONTRACTOR:_____

BY:_____

PRINTED OR TYPED NAME AND TITLE:_____

COMMONWEALTH OF VIRGINIA

CITY/COUNTY OF _____

I, _____, a Notary Public in and for the Commonwealth of Virginia, do hereby certify that _____, whose name is signed to the foregoing, has subscribed, sworn to and acknowledged the same before me this _____ day of _____, 20_____.

Seal:

_____
Notary Public

Registration #:_____

My Commission Expires:_____

CITY OF ROANOKE, VIRGINIA

CERTIFICATE OF FINAL ACCEPTANCE

This Certificate is subject to the terms and conditions of the Contract Documents, including but not limited to Section 20.8 of the General Conditions. The City and Contractor hereby agree that the date fixed for Final Acceptance of the Work by the City is _____.

The establishment of a date of Final Acceptance and/or the acceptance of the Work does not relieve the Contractor of any responsibility for any faulty materials or workmanship or operate to relieve the Contractor or its Surety from any obligation under the Contract with the City, including, but not limited to, any guaranties or warranties, or the Performance Bond or Labor and Material Payment Bond.

ITB NO. _____

PROJECT: _____

CONTRACTOR: _____

_____	_____	_____
Contractor	By	Date
City of Roanoke, Virginia	_____	_____
City	By	Date

CITY OF ROANOKE, VIRGINIA

GENERAL CONDITIONS

TABLE OF CONTENTS

SECTION 1. DEFINITIONS

SECTION 2. INDEMNITY PROVISION

SECTION 3. REGULATIONS AND PERMITS

SECTION 4. CONTRACTORS' AND SUBCONTRACTORS' INSURANCE

SECTION 5. EMPLOYMENT AND CONDUCT OF PERSONNEL

SECTION 6. EMPLOYMENT DISCRIMINATION BY CONTRACTOR PROHIBITED

SECTION 7. SUBCONTRACTORS

SECTION 8. CONDITIONS AT SITE

SECTION 9. SURVEYS AND LAYOUT

SECTION 10. DRAWINGS AND SPECIFICATIONS

SECTION 11. SCHEDULE OF THE WORK

SECTION 12. CONSTRUCTION SUPERVISION

SECTION 13. STANDARDS FOR MATERIAL INSTALLATION AND WORKMANSHIP

SECTION 14. SUBMITTALS

SECTION 15. INSPECTION AND INDEPENDENT TESTING

SECTION 16. USE OF PREMISES AND REMOVAL OF DEBRIS

SECTION 17. PROTECTING PERSONS AND PROPERTY

SECTION 18. DAMAGES TO THE WORK AREA

SECTION 19. CHANGES IN THE WORK

SECTION 20. PAYMENT FOR WORK

SECTION 21. LIQUIDATED DAMAGES

SECTION 22. INSPECTION FOR SUBSTANTIAL COMPLETION AND FINAL ACCEPTANCE

SECTION 23. WARRANTY OF MATERIAL AND WORKMANSHIP

SECTION 24. GUARANTEE OF WORK

SECTION 25. STOP WORK ORDER

SECTION 26. TERMINATION OF CONTRACT FOR CAUSE

SECTION 27. TERMINATION FOR CONVENIENCE OF CITY

SECTION 28. PRECONSTRUCTION CONFERENCE

SECTION 29. PROJECT SIGN(S)

SECTION 30. ASSIGNMENTS

SECTION 31. CONTRACTUAL DISPUTES

REMAINDER OF PAGE INTENTIONALLY LEFT BLANK

CITY OF ROANOKE, VIRGINIA

GENERAL CONDITIONS

SECTION 1. DEFINITIONS

Whenever used in these General Conditions or in the Contract Documents, the following terms have the meanings indicated, which are applicable to both the singular and plural and the male and female gender thereof, and where applicable to any other legal entity such as a corporation, partnership, limited liability company, etc.

The section and paragraph headings are inserted for convenience only.

Architect, Engineer, Architect/Engineer or A/E: The term used to designate the Architect and/or the Engineer who contracts with the City to provide the Architectural and Engineering services for the project. The Architect/Engineer is a separate Contractor and is referred to herein as the Architect/Engineer or abbreviated as A/E. The term includes any associates or consultants employed by the firm to assist in providing the A/E services.

Bidder: The person, firm, corporation, or other entity interested in submitting a bid for the Work to be performed.

Change Order: A document issued by the Director, Department of Public Works on or after the effective date of the Contract which is agreed to by the Contractor and approved by the City, and which authorizes an addition, deletion, or revision in the Work, including any adjustment in the Contract Price and/or the Contract Time.

City or Owner: The City of Roanoke, Virginia, or its authorized representative.

City Code: Refers to the Code of the City of Roanoke (1979), as amended.

City Engineer: The City Engineer or his authorized representative.

City Manager: The City Manager or his authorized representative.

Code of Virginia: Refers to the Code of Virginia (1950), as amended. (Sometimes referred to as Va. Code or Virginia Code.)

Contract Documents: These documents include, but are not limited to, the Project Manual, Invitation to Bid, the Instructions to Bidders, the Bid Form, the Contract, the Bonds or other Bid Security, the Escrow Agreement, the General Conditions, Supplemental General Conditions, Special Conditions, the Specifications, Addenda or Change Orders, the Plans and Drawings, any Supplemental Drawings, and any additional documents incorporated by reference in the above.

Contract: The written agreement between the parties concerning the performance of the Work and consisting of the Contract Documents.

Contractor: The person, firm, corporation, or other entity entering into a contractual agreement with the City to perform the Work.

Defect, Defective, or Deficient: An adjective or noun which when modifying or referring to the word Work refers to Work or any part thereof that is unsatisfactory, faulty, or does not conform to the Contract Documents, or does not meet the requirements of any inspections, standards, tests, or approvals referred to in the Contract Documents.

Director, Department of Public Works: The Director, Department of Public Works or his authorized Department of Public Works' representative.

Document(s): This term includes, but is not limited to: writings, drawings, items on which words, symbols, or marks are recorded; electronic data of any type; videotapes, recordings, photographs and negatives, digital or otherwise; and any other form of data, writing, or information compilation, however recorded or stored, and regardless of physical form or characteristics.

Field Order: A written order issued by the Director, Department of Public Works, which clarifies the requirements of the Contract by giving a more complete expression of the drawings or specifications or other documents without any change in the design, the Contract price, or the Contract time.

Final Acceptance: The City's acceptance of the project from the Contractor upon confirmation from the Director, Department of Public Works and the Contractor that the project is apparently complete in accordance with the Contract requirements.

Notice: All written notices, demands, instructions, claims, approvals, and disapprovals required to obtain compliance with the Contract requirements. Any written notice by either party to the Contract shall be sufficiently given if delivered to or at the last known business address of the person, firm, or corporation constituting the party to the Contract, or to his, her, their, or its authorized agent, representative, or officer.

Notice to Proceed: A written notice given by the City at the City's discretion to the Contractor fixing the date on which the Contract time will commence for the Contractor to begin the prosecution of the Work in accordance with the requirements of the Contract Documents.

Project Inspector: One or more individuals employed by the City to inspect the Work and/or to act as Resident Inspector to the extent required by the City. The City shall notify the Contractor of the appointment of such Project Inspector(s).

Provide: Shall mean to furnish and install ready for its intended use.

Subcontractor: A person, firm, partnership, corporation, or other entity having a direct contract with the Contractor or with any other Subcontractor for the performance of the Work. It includes one who provides on-site labor, but does not include one who only furnishes or supplies material for the project.

Submittals: All drawings, diagrams, illustrations, brochures, schedules, samples, electronic data and other data required by the Contract Documents which are specifically prepared by or for the Contractor, Subcontractor, or Supplier, and submitted by the Contractor to illustrate the material, equipment, or layouts, or some other portion of the Work.

Substantial Completion: The date certified by the Director, Department of Public Works when construction is sufficiently complete, in accordance with the Contract Documents, so the City can occupy or utilize the Work or designated portion thereof for the purposes for which it is intended.

Supplier: A manufacturer, fabricator, distributor, materialman, or vendor who provides only material or supplies for the project, but does not provide on-site labor.

Utilities: Utilities include all public and private lines, cables, conduit, pipelines, and appurtenances, whether underground, on the surface, and/or aerial, that may exist on the project site and/or adjoining public streets and/or rights-of-way for the purpose of providing communications, gas, petroleum, electricity, water, sanitary sewer, storm sewer, drainage, energy, signals, or lighting service to the site or adjoining properties.

Work or Project: The entire completed construction or the various separately identifiable parts thereof as required by the Contract Documents. Work is the result of performing services, furnishing labor, and furnishing and incorporating material and equipment into the construction.

SECTION 2. INDEMNITY PROVISION

2.1 Indemnity: Contractor shall indemnify and hold harmless City and its officers, agents, and employees against any and all liability, losses, damages, claims, causes of action, suits of any nature, costs, and expenses, including reasonable attorney's fees, resulting from or arising out of Contractor's or its employees, agents, or subcontractors actions, activities, or omissions, negligent or otherwise, on or near City's property or easement or arising in any way out of or resulting from any of the work to be provided under this Contract, and this includes, without limitation, any fines or penalties, violations of federal, state, or local laws or regulations, personal injury, wrongful death, or property damage claims or suits, breach of contract claims, indemnity claims, and any other damages, losses, and/or claims of any type.

2.2 Hazardous Material: While on City's property or easement and in its performance of this Contract, Contractor shall not transport, dispose of or release any hazardous substance, material, or waste, except as necessary in performance of its Work under this Contract and in any event Contractor shall comply with all federal, state, and local laws, rules, regulations, and ordinances controlling air, water, noise, solid wastes, and other pollution, and relating to the storage, transport, release, or disposal of hazardous material, substances or waste. Regardless of City's acquiescence, Contractor shall indemnify and hold City, its officers, agents, and employees harmless from all costs, claims, damages, causes of action, liabilities, fines or penalties, including reasonable attorney's fees, resulting from Contractor's violation of this paragraph and agrees to reimburse City for all costs and expenses incurred by City in eliminating or remedying such violations. Contractor also agrees to reimburse City and hold City, its officers, agents, and employees harmless from any and all costs, expenses, attorney's fees and all penalties or civil judgments obtained against the City as a result of Contractor's use or release of any hazardous substance or waste onto the ground, or into the water or air from or upon City's premises. (See also Section 13.2 of these General Conditions.)

2.3 Patents: The Contractor shall protect, indemnify, and hold harmless the City from any and all demands for fees, claims, suits, actions, causes of action, or judgments based on the alleged infringement or violation of any patent, invention, article, trademark, arrangement, or other apparatus that may be used in the performance of the Contract or the Work.

SECTION 3. LAWS, REGULATIONS, PERMITS, AND IMMIGRATION LAW

3.1 **Regulations:** The Contractor shall fully comply with all local, state, and federal ordinances, laws, and regulations, including without limitation all applicable building and fire code sections of the Occupational Safety and Health Act (OSHA), and the Virginia Uniform Statewide Building Code, and obtain all required licenses and permits, including business license, building permits, and pay all charges and expenses connected therewith. Contractor further agrees that Contractor does not, and shall not during the performance of this Contract, knowingly employ an unauthorized alien as defined in the federal Immigration Reform and Control Act of 1986.

3.2 **Permits:** The Contractor shall, at its sole cost, obtain all required permits from the appropriate authorities, including a Right of Way Excavation Permit(s) from the City of Roanoke. Contractor shall obtain an additional separate Excavation Permit Bond(s) in accordance with the requirements of the City's Right of Way Excavation and Restoration Standards. Revised July 1, 2013, together with any other documents and/or items that may be required by the City's Department of Public Works and/or Department of Planning. Building and Development. No delay or extension of time or any claim for additional compensation of any type shall be granted for failure to obtain any required permits.

3.3 **Litter:** In accordance with the Virginia Anti-Litter Law, receptacles sufficient to contain workmen's litter and construction wastes capable of being spread by wind or water shall be located on the construction site. The number and size of receptacles required shall be determined by the Contractor.

3.4 **Asbestos License:** The Contractor, if not licensed as an asbestos abatement contractor or a Roofing, Flooring, and Siding (RFS) contractor in accordance with Section 54.1-514, of the Code of Virginia, shall have all asbestos related work performed by subcontractors who are duly licensed as asbestos contractors or RFS contractors as appropriate for the work required.

SECTION 4. CONTRACTOR'S AND SUBCONTRACTOR'S INSURANCE

Neither the Contractor nor any subcontractor shall commence work under this Contract until the Contractor has obtained and provided proof of the required insurance under this Section to the City, and such proof has been approved by the City. The Contractor confirms to the City that all subcontractors have provided the Contractor with proof of insurance, or will do so prior to commencing any work under this Contract. Contractor further warrants that proof of coverage as provided to the City responds on a primary basis in the event of an uninsured or underinsured subcontractor. All such insurance shall be primary and non-contributory to any insurance or self-insurance the City may have in force.

4.1 **For All Contracts,** the following minimum insurance requirements apply:

a. Workers' Compensation and Employers' Liability:

The Contractor shall obtain and maintain the following limits:

Workers' Compensation: Statutory coverage for Virginia

Employers' Liability: $100,000 Bodily Injury by Accident each occurrence
$500,000 Bodily Injury by Disease Policy Limit
$100,000 Bodily Injury by Disease each employee

b. Commercial General Liability:
Coverage is to be written on an "occurrence" basis and such coverage shall include broad form extension endorsements for both liability and property damage.

Completed Operations coverage will be required to be maintained for the life of the Contract.

For Limits of Liability see Sections 4.2 and 4.3 of these General Conditions.

c. Automobile Liability:

Limits for vehicles owned, non-owned, hired or borrowed shall not be less than:

- $1,000,000 Bodily Injury and Property Damage combined single limit per occurrence.

d. Additional Insurance Requirements:

Additional specific insurance coverage minimum requirements to be provided by Contractor may include the following or as detailed in the Supplemental General Conditions or in other Contract Documents:

1) Builders Risk: At the discretion of the City, the Contractor, at its cost, shall obtain and maintain in the names of the City and the Contractor "all-risk" builders risk insurance (if approved by the City) upon the entire structure or structures on which the Work of this Contract is to be done and upon all material in or adjacent thereto or those that are “off-site” but which are intended for use thereon, to one hundred percent (100%) of the completed value thereof.

2) Property Coverage: Installation Floater (and Rigger's Form, if applicable) will be required for the installation of contents or equipment; coverage will begin with supplier and continue until equipment/contents has been fully installed. Floater will be valued for the replacement cost value of equipment/contents including all costs. The Contractor shall provide coverage for portions of the work stored off-site after written approval of the City at the value established in the approval and for portions of the work in transit.

3) Special Hazards: In the event special hazards are evident in the work contemplated, or if required by the Contract Documents, the Contractor shall obtain and maintain during the life of the Contract a rider to the policy or policies required, in an amount not less than that stipulated under the above Paragraphs. Should any unexpected special hazards be encountered during the performance of this Contract, the Contractor shall, prior to performing any work involving the special hazard, immediately

obtain this insurance as instructed by the City. In the event the special hazard requiring the additional coverage was not a part of the original bid, the expense of such insurance shall be reimbursed to the Contractor by the City, otherwise the Contractor shall assume full responsibility for the purchase with no charge back to the City.

4) Deductible: Deductible/self-insured retention amounts shall be reduced or eliminated upon written request from City. The insurer's cost of defense (and appeal), including attorney's fees, shall not be included within the coverages provided but shall remain the insurer's responsibility.

5) Term: Insurance shall remain in effect until final payment and at all times thereafter when Contractor may be correcting, removing, or replacing defective work.

6) Limit of Liability: Nothing contained in these insurance requirements is to be construed as limiting the liability of Contractor or Contractor's insurance carriers. City does not in any way represent that the coverages or the limits of insurance specified is sufficient or adequate to protect Contractor's interests or liabilities, but are merely minimums. The obligation of the Contractor to purchase insurance herein shall not in any way limit the obligation of the Contractor in any event and/or in the event that the City should suffer an injury or loss in excess of the amount recoverable through insurance.

4.2 Contracts of $100,000 or More: The following minimum insurance requirements apply in addition to the above requirements:

a. Limits of Liability: For the Commercial General Liability policy:

- $2,000,000 general aggregate
- $1,000,000 products/completed operations aggregate
- $1,000,000 personal and advertising injury
- $1,000,000 each occurrence

Coverage is to be written on an "occurrence" and "per project" basis and such coverage shall include:

b. Umbrella Liability Insurance:

This coverage shall be written for minimum limit of:

- $5,000,000 each occurrence for Personal and Bodily Injury and Property Damage

This Policy shall apply in excess and follow the form of employer's liability, commercial general liability, and auto liability.

4.3 Contracts Less Than $100,000: The following minimum insurance limits apply unless specified otherwise in the Supplemental General Conditions:

a. Limits of Liability: For the Commercial General Liability policy:

- $1,000,000 general aggregate

- $1,000,000 products/completed operations aggregate
- $1,000,000 personal and advertising injury
- $1,000,000 each occurrence

4.4 **Proof of Insurance Coverage:** The policies of insurance required by Sections 4.1, 4.2, or 4.3 shall be purchased from a reputable insurer licensed to do business in Virginia and maintained for the life of the Contract by the Contractor. Other insurance requirements include the following:

a. The Contractor shall furnish the City with the required certificates of insurance showing the insurer, type of insurance, policy number, policy term, deductible, and the amount insured for property coverages and the limits for liability coverages.

b. The Contractor shall notify the Director, Department of Public Works and Risk Manager in writing within five (5) consecutive calendar days if any of the insurance coverages or policies are cancelled or materially altered and Contractor shall immediately replace such policies and provide documentation of such to the Director, Department of Public Works and Risk Manager.

c. The required insurance policies and coverages, excluding those for Workers' Compensation and Professional Liability, shall name the City of Roanoke, its officers, agents, volunteers and employees as additional insureds, and the certificate of insurance shall show if the policies provide such coverage. Waiver of subrogation is required with respect to any policy of workers' compensation and employers' liability insurance required under this Section. The certificate of insurance shall show if the policies provide such waiver. Additional insured and waiver endorsements shall be received by the City's Risk Manager from the insurer with the certificate of insurance unless the City's Risk Manager agrees to another process. The City's Risk Manager may approve other documentation of such insurance coverages.

d. Insurance coverage shall be in a form and with an insurance company approved by the City which approval shall not be unreasonably withheld. Any insurance company providing coverage under this Contract shall be authorized to do business in the Commonwealth of Virginia.

SECTION 5. EMPLOYMENT AND CONDUCT OF PERSONNEL

5.1 **City Residents:** The Contractor is encouraged to try to use City residents, and local, Small, Minority-Owned, Women-Owned, and Service Disabled Veteran-Owned businesses, when practical.

5.2 **Employee Qualifications:** Only skilled and reliable workers shall be employed for the Work. Should any person employed on the Work by the Contractor appear to the Director, Department of Public Works to be incompetent, unable to perform the Work, or disorderly, such person shall be removed from the Work immediately upon proper notice to the Contractor from the Director, Department of Public Works and such person shall not again be used for this Contract.

5.3 **Superintendence:** The Contractor shall have a competent foreman or superintendent, satisfactory to the Director, Department of Public Works, on the jobsite at all times during the progress of the Work. The Contractor shall notify the City, in writing, of any

proposed change in the foreman or superintendent including the reason therefore prior to making such change.

5.4 **Drug-free Workplace:** During the performance of this Contract, the Contractor agrees to (i) provide a drug-free workplace for the Contractor's employees; (ii) post in conspicuous places, available to employees and applicants for employment, a statement notifying employees that the unlawful manufacture, sale, distribution, dispensation, possession, or use of a controlled substance or marijuana is prohibited in the Contractor's workplace and specifying the actions that will be taken against employees for violations of such prohibition; (iii) state in all solicitations or advertisements for employees placed by or on behalf of the Contractor that the Contractor maintains a drug-free workplace; and (iv) include the provisions of the foregoing clauses in every subcontract or purchase order over $10,000, so that the provisions will be binding upon each subcontractor or vendor.

For the purpose of this section, "drug-free workplace" means a site for the performance of work done in connection with a specific contract awarded to a Contractor, the employees of whom are prohibited from engaging in the unlawful manufacture, sale, distribution, dispensation, possession or use of any controlled substance or marijuana during the performance of the Contract.

The Contractor shall post a copy of the policy in a conspicuous place at the jobsite and assure that all Contractor, subcontractor, and supplier personnel entering the jobsite are informed of the policy.

SECTION 6. EMPLOYMENT DISCRIMINATION BY CONTRACTOR PROHIBITED

Every Contract of over $10,000 to which the City is a party shall contain the provisions in Sections 6.1 and 6.2 herein:

6.1 **Nondiscrimination:** During the performance of this Contract, the Contractor agrees as follows:

a. The Contractor will not discriminate against any Subcontractor, employee, or applicant for employment because of race, religion, color, sex, national origin, age, disability, or any other basis prohibited by State law relating to discrimination in employment, except where there is a bona fide occupational qualification reasonably necessary to the normal operation of the Contractor. The Contractor agrees to post in conspicuous places, available to employees and applicants for employment, notices setting forth the provisions of this nondiscrimination clause.

b. The Contractor, in all solicitations or advertisements for employees placed by or on behalf of the Contractor, will state that such Contractor is an equal employment opportunity employer.

c. Notices, advertisements, and solicitations placed in accordance with federal law, rule, or regulation shall be deemed sufficient for the purpose of meeting the requirements of this section.

6.2 Nondiscrimination by Subcontractor or Vendor: The Contractor will include the provisions of the foregoing Subsections 6.1 (a), (b), and (c) in every subcontract or purchase order of over $10,000, so that the provisions will be binding upon each subcontractor or vendor.

SECTION 7. SUBCONTRACTORS

7.1 Licensure: The Contractor shall comply with Title 54.1, Chapter 11, of the Code of Virginia, with respect to licensure of itself and all subcontractors employed to work on the project. The Contractor represents that it has verified that all subcontractors hold all required state and local licenses, including State Contractor's license and City business license. The Contractor shall verify that any additional subcontractors employed to work on the project, subsequent to the initial verification, hold all required state and local licenses, including State Contractor's license and City business license. Upon request from the Director, Department of Public Works, Contractor shall provide documentation of compliance with this Section 7.1. Failure to comply constitutes a material breach of the Contractor's Contract with the City.

7.2 Change of Subcontractors: Subcontractors shall not be changed without the written approval of the Director, Department of Public Works.

7.3 Responsibility for Subcontractors: The Contractor shall not employ for the project any subcontractor that the City may, within a reasonable time, object to as unsuitable. The Contractor further agrees that it is as fully responsible to the City for the acts and omissions of its subcontractors, suppliers, and invitees on the jobsite and of persons either directly or indirectly employed by them, as the Contractor is for the acts and omissions of persons directly employed by it.

SECTION 8. CONDITIONS AT SITE

8.1 Existing Conditions: The Contractor shall have visited the site prior to bidding and is responsible for having ascertained pertinent local conditions such as location, accessibility, and general character of the site, and the character and extent of existing improvements and work within or adjacent to the site. Claims as a result of failure to have done so will not be considered by the City and will be the sole responsibility of the Contractor.

8.2 Hidden Conditions: If, in the performance of the Contract, hidden physical conditions of a building being modified are exposed revealing unusual or materially different conditions than those ordinarily encountered or inherent in work of this nature, or if subsurface or latent conditions at the site are found which are materially different from those frequently present in the locality, from those indicated in the Contract Documents, or from those inherent in work of the character required by the Contract, the Contractor must report such conditions to the Director, Department of Public Works before the conditions are disturbed. Upon such notice, or upon his own observation of such conditions, the Director, Department of Public Works will make such changes in the Contract Documents as he finds necessary to conform to the different conditions. Any change in the cost of the Work or the time needed for completion must be requested pursuant to Section 19 of these General Conditions.

8.3 Suspected Hazardous Material: If the Contractor, during the course of the project, observes the existence of any material which it suspects or knows to be hazardous to human health or the environment, the Contractor shall promptly notify the Director, Department of Public Works. The Director, Department of Public Works will provide the

Contractor with instructions regarding the situation. The Contractor shall not perform any work involving the material or any work causing the material to be less accessible prior to receipt of special instructions from the Director, Department of Public Works.

SECTION 9. SURVEYS AND LAYOUT

9.1 Surveying Services: All necessary drawings showing the location of property lines, buildings, and other appropriate information shall be furnished to the Contractor through the drawings and specifications. The Contractor shall provide competent surveying and engineering services to verify the given information and to execute the Work in accordance with the Contract requirements and shall be responsible for the accuracy of Contractor's surveying and engineering services. The Contractor shall immediately notify the Director, Department of Public Works of any discrepancies and confirm such notice in writing within five (5) calendar days.

9.2 Survey Control: Such general reference points and bench marks on the building site as will enable the Contractor to proceed with the Work will be established in the drawings and specifications. If the Contractor finds that any previously established reference points have been lost or destroyed, Contractor shall promptly notify the Director, Department of Public Works.

9.3 Damage to Survey Control: The Contractor shall protect and preserve the established bench marks and monuments and shall make no changes in locations without written notice to and approval from the Director, Department of Public Works. Any of these which may be lost or destroyed or which require shifting because of necessary changes in grades or locations shall, subject to prior approval from Director, Department of Public Works, be replaced and accurately located by the Contractor.

SECTION 10. DRAWINGS AND SPECIFICATIONS

10.1 Drawings and Specifications: The general character and scope of the Work are illustrated by the drawings and specifications. Where on any of the drawings a portion of the Work is drawn out and the remainder is indicated in outline, the parts drawn out shall apply also to all other like portions of the Work. If the Contractor deems additional detail or information to be needed, Contractor may request the same in writing from the Director, Department of Public Works. The Contractor shall carry out the Work in accordance with the drawings and specifications and any additional detail drawings and instructions as issued by the Director, Department of Public Works. However, Contractor shall immediately notify the Director, Department of Public Works of any discrepancies in such drawings and/or specifications and confirm such notice in writing within five (5) calendar days.

10.2 Discrepancies in Drawings: In case of difference between small and large scale drawings, the large scale drawings shall govern, unless otherwise directed in writing by the Director, Department of Public Works.

10.3 "Similar": Where the word "similar" appears on the drawings, it shall be interpreted in its general sense and not as meaning identical, and all details shall be worked out in relation to their location and their connection with other parts of the Work.

10.4 Division of Specifications: The specifications are divided into several parts for convenience only, since the entire specifications must be considered as a whole. The divisions of the specifications are not intended to control the Contractor in dividing the work among subcontractors or to limit the work performed by any trade. The Contractor shall be responsible for the coordination of the trades, subcontractors, and vendors engaged upon this Work.

10.5 Dimension Accuracy: Measurements or dimensions shown on the drawings for site features, utilities, and structures shall be verified at the site by the Contractor. The locations of underground utilities indicated on the plans are diagrammatic and were plotted from available records and field survey information and shall be considered approximate only, and the City makes no representations with regard to their accuracy. The Contractor shall not scale measurements or dimensions from the drawings. Where there are discrepancies, the Director, Department of Public Works shall be consulted. Where new work is to connect to, match with, or be provided for existing work, the Contractor shall verify the actual existing conditions and related dimensions prior to ordering or fabrication, so that such new work will properly fit with existing work.

10.6 As-Built Drawings: The Contractor shall maintain at the site for the City one copy of all drawings, specifications, addenda, approved shop or setting drawings, change orders, field deviations, and other documents or modifications (referred to herein as "As-Built Drawings") in good order and marked to record all changes as they occur during construction. These shall be available to the Director, Department of Public Works, the Project Inspector, and the City's testing personnel. These "As-Built Drawings" shall be neatly and clearly marked in color during construction to record all variations from the drawings made during construction. The representation of such variations shall include such supplemental notes, symbols, legends, documents, and details as may be necessary to clearly show the as-built construction.

10.7 Record Drawings: Upon completion of the Work and prior to Final Acceptance, the Contractor shall deliver to the Director, Department of Public Works, for preparation of the Record Drawings, one complete set of "As-Built Drawings" and documents referred to in Section 10.6 as well as an electronic copy, if available, or if requested by the Director, Department of Public Works.

SECTION 11. SCHEDULE OF THE WORK

11.1 Scheduling: The Contractor is responsible for the sequencing, scheduling, and coordinating of the Work, for monitoring the progress of the Work, and for taking appropriate action to keep the Work on schedule. The Contractor is responsible for coordinating Contractor's work on the Project with any other work being carried on by the City or by other City consultants or contractors at the site or for the Project. The Contractor shall prepare and submit to the Director, Department of Public Works a schedule for accomplishing the Work based upon the completion time stated in the Contract and submit such to the Director, Department of Public Works at the pre-construction conference. No progress payments will be made to the Contractor until after Contractor has submitted a schedule which is acceptable to the Director, Department of Public Works. All schedules under Section 11 shall be in both paper and electronic form unless otherwise directed by the Director, Department of Public Works.

11.2 Progress: The Contractor shall review the progress of the Work not less than each month, but as often as necessary to properly manage the project and stay on schedule. The Contractor shall collect and preserve information on Change Orders, including extensions of time. The Contractor shall evaluate this information and update the schedule monthly to finish within the contractually allowed time. The Contractor shall submit the updated schedule with each progress payment request. The scheduled completion date shall be within the period of time allowed by the Contract for completion of construction, except as amended by any Change Orders.

11.3 Delay and Recovery Schedule: Should there be any delay, the Director, Department of Public Works may require the Contractor to prepare, at no extra cost to the City, a plan of action and a recovery schedule for completing the Work by the contractual

completion date. The plan of action and recovery schedule shall explain and display how the Contractor intends to regain compliance with the original schedule. The plan of action and recovery schedule, when required, shall be submitted and approved by the Director, Department of Public Works prior to Contractor's submission of the next monthly construction estimate. The City may withhold progress payments until such schedule is submitted and approved.

SECTION 12. CONSTRUCTION SUPERVISION

The Contractor shall be solely responsible to supervise and direct the Work competently and efficiently, devoting such attention thereto and applying such skills and expertise as may be necessary to perform the Work in accordance with the Contract. The Contractor shall be solely responsible for the means, methods, techniques, sequences, and procedures of construction. The Contractor is solely responsible to the City that the finished Work complies with the Contract Documents. The Contractor shall be solely responsible for health and safety precautions and programs for workers and others in connection with the Work. No inspection by, knowledge on the part of, or acquiescence by the City, or any other entity whatever shall relieve the Contractor from its sole responsibility for compliance with the requirements of the Contract or responsibility for health and safety programs and precautions.

SECTION 13. STANDARDS FOR MATERIAL INSTALLATION AND WORKMANSHIP

13.1 Material and Equipment: Unless otherwise specifically provided in this Contract, all equipment, material, and accessories incorporated in the Work are to be new and in first class condition. The Contractor shall furnish to the Director, Department of Public Works for approval the name of the manufacturer, the model number, and other identifying data and information respecting the performance, capacity, nature, and rating of the machinery and mechanical and other equipment which the Contractor contemplates incorporating in the Work. Machinery, equipment, material, and articles installed or used without required approval may be subject to subsequent rejection by the City.

13.2 Hazardous Substances: Unless specifically approved by the City or required by the specifications, the Contractor shall not incorporate any material into the Work containing asbestos or any material known by the Contractor to contain a substance known to be hazardous to human health. If the Contractor becomes aware that a material required by the specifications contains asbestos or other hazardous substances, it shall notify the City and the Director, Department of Public Works immediately and shall take no further steps to acquire or install any such material without first obtaining City approval. (See also Sections 2.2 and 8.3 of these General Conditions.)

13.3 Workmanship: The workmanship shall be of the highest quality found in the building industry in every respect. All items of Work shall be done by workmen skilled in the particular task to which they are assigned. In the acceptance or rejection of work, no allowance will be made for lack of skill on the part of workmen. Poor or inferior workmanship (as determined by the Director, Department of Public Works, the City, or other inspecting authorities) shall be removed and replaced to conform to the highest quality standards of the trades concerned, or otherwise corrected to the satisfaction of the Director, Department of Public Works, the City, or other inspecting authority all at the Contractor's sole expense.

13.4 Instructions for Installation: Under the various sections of the specifications, where specified items are supplied with the manufacturer's printed instructions, recommendations, or directions for installation, or where such instructions, recommendations, or directions are available, installation of the specified items shall be

in strict accordance with the manufacturer's printed instructions unless those instructions contradict the drawings or specifications, in which case the Director, Department of Public Works will be notified by Contractor for an interpretation and decision.

13.5 Installation Procedures Without Instructions: Where neither the manufacturer's printed instructions are available for installation of specific items, nor are specific code or standards given by reference to govern the installation of specific items; and where there is doubt concerning the installation procedures to be followed or the quality of workmanship to be maintained in the installation of specific items, the Contractor shall consult the Director, Department of Public Works for approval of the installation procedures Contractor proposes to follow or the specific standards governing the quality of workmanship Contractor proposes to maintain during the installation of the items in question.

13.6 Codes and Standards: Under the various sections of the specifications, where reference is made to specific codes or standards governing the installation of specified items, installation shall in all cases be in strict accordance with the referenced codes and standards. Where no reference is made to specific codes or standards, installation shall conform to the generally recognized applicable standards for first-class installation of the specific item to be installed. Contractors are expected to be proficient and skilled in their respective trades and knowledgeable of the National Fire Protection Association (NFPA), the current edition of the Virginia Uniform Statewide Building Code (USBC) and its referenced technical codes and standards, Occupational Safety and Health Act (OSHA) and other codes and standards applicable to installations and associated work by its trade and/or that are applicable to the Work.

SECTION 14. SUBMITTALS

14.1 General: The Contractor shall submit for the approval of the Director, Department of Public Works all submittals required by the specifications or requested by the Director, Department of Public Works All such submissions shall be made with such promptness as to cause no delay in this or any other part of the project, and to allow reasonable time for checking, correcting, resubmitting, and recorrecting. No part of the Work dealt with by a submittal shall be fabricated by the Contractor, save at Contractor's own risk, until such approval has been given. The Contractor shall maintain one (1) set of approved submittals at the jobsite at all times.

14.2 Format: Submittals shall be made in such number of copies that two (2) approved copies may be retained by the Director, Department of Public Works. Each submission shall be accompanied by a letter of transmittal listing the contents of the submission and identifying each item by reference to specification section or drawings. All submittals shall be clearly labeled with the name of the project and other necessary information. Catalog plates and other similar material that cannot be so labeled conveniently, shall be bound in suitable covers bearing the identifying data.

14.3 Supporting Material: Submittals shall be accompanied by all required certifications and other such supporting material and documents, and shall be submitted in such sequence or in such groups that all related items may be checked together. When submittals cannot be checked because the submission is not complete, or because submittals on related items have not been received, then such submittals will be returned without action or will be held, not checked, until the material which was lacking is received.

14.4 Coordination: Submittals shall have been reviewed by the Contractor and coordinated with all other related or affected work before they are submitted for approval, and shall bear the Contractor's certification that it has checked and approved them as complying

with the information given in the Contract Documents. Submittals made without such certification and coordination will be returned to the Contractor without action, and will not be considered a formal submission. The Contractor shall be responsible for checking all dimensions and coordinating all material and trades to ensure that the material proposed will fit in the space available and be compatible with other material provided.

14.5 **Variations:** If the submittals show variations from the Contract Documents because of standard shop practice or other reasons, the Contractor shall make specific mention of such variation in Contractor's letter of transmittal in order that, if acceptable, suitable action may be taken for proper adjustment; otherwise the Contractor will not be relieved of the responsibility for executing the Work in accordance with the Contract Documents even though such submittals have been approved.

14.6 **"Or Equal":** The drawings and/or specifications may indicate that the Director, Department of Public Works designed or detailed a portion of the plans around a particular product (most commonly a piece of equipment). Should a different product be proposed by the Contractor and accepted, all modifications, rerouting, relocations, and variations required for proper installation and coordination to comply with the design concept and requirements of the Contract Documents shall be the sole responsibility of the Contractor and shall be made at no extra cost to the City. This naming of a particular product, around which the plans were designed or detailed, is not intended to preclude the use of other products or favor the product named when a "brand name or equal" specification has been used. (See also Section 10 of Instructions to Bidders.) Rather it is only intended to acknowledge the reality that in many instances the Director, Department of Public Works must design around the dimensions and characteristics of a particular product.

14.7 **Review by Director, Department of Public Works:** The Director, Department of Public Works will review and respond to the submittals within fourteen (14) calendar days. Checking and/or approval of submittals will be for general conformance with the design concept of the project and compliance with the information given in the Contract Documents, and will not include verification of quantities, detailed dimensions, nor adjustments of dimensions to actual field conditions. Approval shall not be construed as permitting any departure from Contract requirements, authorizing any increase in price or time for completion or relieving the Contractor of the responsibility for any error in details, dimensions, or otherwise that may exist.

14.8 The Work shall be in accordance with approved submittals.

SECTION 15. INSPECTION AND INDEPENDENT TESTING

15.1 **Inspection and Testing:** All material and workmanship shall be subject to inspection, examination, and testing by the Director, Department of Public Works at any and all times during manufacture and/or construction. The Director, Department of Public Works shall have authority to reject defective material and workmanship and require its correction. Rejected workmanship shall be satisfactorily corrected and rejected material shall be satisfactorily replaced with proper material without charge therefore, and the Contractor shall promptly segregate and remove the rejected material from the premises. If the Contractor fails to proceed at once with replacement of rejected

material and/or the correction of defective workmanship, the City may, by contract or otherwise, replace such material and/or correct such workmanship and charge the cost to the Contractor, and/or may terminate the right of the Contractor to proceed as provided in Sections 26 or 27 of these General Conditions, the Contractor and surety being liable for any damage to the same extent as provided for in those Sections.

15.2 Payment for Inspection, Testing, and Certification:

a. Jobsite inspections, tests conducted on site, or tests of material gathered on site which the Contract requires to be performed by independent testing entities shall be contracted and paid for by the City. The Contractor shall promptly furnish, without additional charge, all reasonable facilities, labor, and material necessary for making such tests. Except as provided in Section 15.3 below, whenever such examination and testing finds defective material, equipment, or workmanship, the Contractor shall reimburse the City for the cost of reexamination and retesting.

b. Although conducted by independent testing entities, the City will not contract and pay for tests or certifications of material, manufactured products or assemblies which the Contract, codes, standards, etc. require to be tested and/or certified for compliance with industry standards such as Underwriters Laboratories, Factory Mutual or ASTM. If there are any fees to be paid for such tests and certifications, they shall be paid by the Contractor.

c. The Contractor shall also pay for all inspections, tests, and certifications which the Contract specifically requires it to perform or pay, together with any inspections and tests which it chooses to perform for its own quality control purposes.

15.3 Examination of Completed Work: Should it be considered necessary or advisable by City or the Director, Department of Public Works at any time before final acceptance of the entire Work to make an examination of any part of the Work already completed, by removing or tearing out portions of the Work, the Contractor shall on request promptly furnish all necessary facilities, labor, and material to expose the Work to be tested to the extent required. If such Work is found to be defective in any respect, due to the fault of the Contractor or its Subcontractors, Contractor shall pay for all the expenses of uncovering the Work, of examination and testing, and of satisfactory reconstruction. If, however, such Work is found to meet the requirements of the Contract, the actual cost of the Contractor's labor and material necessarily involved in uncovering the Work, the cost of examination and testing and Contractor's cost of material and labor necessary for replacement shall be paid to the Contractor and it shall, in addition, if completion of the Work has been delayed thereby, be granted a suitable extension of time.

15.4 Suspension of Work: The City may suspend the Work when in its judgment the drawings and specifications are not being followed. Any such suspension shall be issued in writing and continued only until the matter in question is resolved to the satisfaction of the City. The cost of any such Work stoppage shall be borne by the Contractor unless it is later determined that no fault existed in the Contractor's Work.

15.5 Project Inspector: Failure of the Project Inspector to note or require correction of improper or defective work does not relieve the Contractor from its responsibility to correct such improper or defective work. The Project Inspector has no authority to and shall not:

a. Enter into the area of responsibility of the Contractor's superintendent;

b. Issue directions relative to any aspect of construction means, methods, techniques, sequences or procedures, or in regard to safety precautions and programs in connection with the Work;

c. Authorize or suggest that the City occupy the project, in whole or in part; or

d. Issue a certificate for payment.

SECTION 16. USE OF PREMISES AND REMOVAL OF DEBRIS

16.1 Jobsite Coordination: The Contractor shall perform the Contract in such a manner as not to interrupt or interfere with the operation of any existing activity on the premises or with the work of any other contractor.

16.2 Storage of Material: The Contractor shall store apparatus, material, supplies, and equipment in such orderly fashion at the site of the Work as will not unduly interfere with the progress of its Work or the work of any other contractor.

16.3 Jobsite Appearance: The Contractor expressly undertakes, either directly or through its Subcontractor(s), to clean up frequently all refuse, rubbish, scrap material, and debris caused by his operations, to the end that at all times the jobsite shall present a neat, orderly, and workmanlike appearance. No such refuse, rubbish, scrap material, and debris shall be left within the completed Work nor buried on the building site, but shall be properly protected and removed from the site and properly disposed of in a licensed landfill or otherwise as required by law.

16.4 Final Cleaning: The Contractor expressly undertakes, either directly or through its Subcontractor(s), before final payment, to remove all surplus material, false work, temporary structures, including foundations thereof, and debris of every nature resulting from its operations and to put the site in a neat, orderly condition, to thoroughly clean and leave reasonably dust free all finished surfaces including all equipment, piping, etc., on the interior of all buildings included in the Contract; and to thoroughly clean all glass installed under the Contract including the removal of all paint and mortar splatter and other defacements. If a Contractor fails to clean up at the completion of the Work, the City may do so and charge for costs thereof to the Contractor in accordance with these General Conditions.

16.5 Erosion Control: During and at completion of the Work, the Contractor shall prevent site soil erosion, the runoff of silt and/or debris carried by water from the site, and the blowing of dust or debris off the site in accordance with the applicable requirements and standards of the Virginia Erosion and Sediment Control Handbook, latest edition, and of the Contract Documents and the requirements of the City's Department of Planning, Building and Development.

SECTION 17. PROTECTING PERSONS AND PROPERTY

17.1 Protection on Site: The Contractor expressly undertakes, both directly and through its Subcontractor(s), to take every reasonable precaution at all times for the protection of all persons and property which may come on the jobsite or be affected by the Contractor's operation in connection with the Work.

17.2 Safety and Health Precautions: The Contractor shall be solely responsible for initiating, maintaining, and supervising all safety and health precautions and programs in connection with the Work, including but not limited to provision of appropriate sanitation facilities, if applicable.

17.3 Protecting the Public: The Contractor shall in all cases protect the public and the Work, during its execution, by posting and maintaining, at its expense, appropriate signs, barricades, barriers, lights, flagmen, and other safety devices in accordance with the current edition of the "Virginia Work Area Protection Manual".

17.4 Protecting the Work and Adjacent Property: The Contractor shall continuously maintain adequate protection of all the Work from damage and shall protect the City's property from injury or loss arising in connection with this Contract. The Contractor shall adequately protect adjacent property to prevent any damage to it or loss of use and enjoyment by its owners. The Contractor shall provide and maintain all passageways, guard fences, lights, and other facilities for protection required by public authority, local conditions, any of the Contract Documents or erected for the fulfillment of its obligations for the protection of persons and property.

17.5 Emergencies: In an emergency affecting the safety or life of persons or of the Work, or of the adjoining property, the Contractor, without special instruction or authorization from the Director, Department of Public Works, shall act, at Contractor's discretion, to prevent such threatened loss or injury. Also, should Contractor, to prevent threatened loss or injury, be instructed or authorized to act by the Director, Department of Public Works, Contractor shall so act immediately, without appeal.

SECTION 18. DAMAGES TO THE WORK AREA

18.1 Damage to the Work: The Contractor shall have charge of and be solely responsible for the entire Work and be liable for all damages to the Work including, but not limited to any of the damages hereafter mentioned, and to any property in the vicinity of the Work, until its completion and acceptance by the Director, Department of Public Works.

a. Where the work involves alterations, renovations, or modifications to any existing building, the Contractor shall familiarize itself with the structural condition of such building before proceeding with any work. It shall be the Contractor's responsibility to take all necessary safeguards to protect and maintain all parts of the building in a safe condition at all times during the process of construction and to protect from damage those portions of the building that are to remain.

b. Under no condition shall any load be placed on any part of a building, whether new or existing, in excess of the load the structure will safely support, and no structural member(s) shall be cut or altered without the written consent of the Director, Department of Public Works.

c. The Contractor shall conduct all operations in such a manner as to avoid damage to existing work and surfaces within any existing building that are to remain. Any and all damaged work and surfaces shall be repaired, replaced, or restored to their original condition at the time when this work was started, and the expense of such work shall be borne by the Contractor.

18.2 Damage to Utilities: The respective Utility Company shall be given a minimum of forty-eight (48) hours notice prior to any adjustment of utilities, and the Contractor shall

comply with the provisions of the Virginia Underground Utilities Damage Prevention Act, Section 56-265.14 et seq., of the Code of Virginia. Damages that may occur to the utilities during the Work shall be the sole responsibility of the Contractor.

18.3 Relocation of Utilities: Should any utilities require adjustment during the Work, it shall be the Contractor's responsibility to have such utilities relocated as a part of the Work and to contact and cooperate with the respective Utility Company in performance of such operations.

18.4 Damage to Other Work and Existing Structures: The Contractor shall take into account all other work which shall be done by other parties on the jobsite, either now known or which may become necessary during the progress of the Work, and shall be responsible for any damage done to the other work. Damage to concrete curbs, gutters, sidewalks, or any existing facility that may occur during the construction shall be repaired or replaced by the Contractor, at its sole expense, as directed by and to the satisfaction of the Director, Department of Public Works.

18.5 Weather Damage: Damage with respect to the Work caused by the weather shall be the responsibility of the Contractor.

18.6 Blasting: Any damage that may occur due to blasting shall be the sole responsibility of the Contractor.

SECTION 19. CHANGES IN THE WORK

19.1 Changes in Drawings and Specifications: The City reserves the right to make such changes in the drawings and specifications and in the character of the Work as may be necessary or desirable to ensure completion in the most satisfactory manner, provided such changes do not materially alter the original plans and specifications or change the general nature of the Work as a whole. Such changes shall not be considered as waiving or invalidating any condition or provision of the Contract and Bonds. Such changes shall be issued by the Director, Department of Public Works to Contractor.

19.2 Changes in Quantities: The City reserves the right to make changes in the quantities of the Work, as may be considered necessary or desirable and such changes shall not be considered as waiving or invalidating any conditions or provisions of the Contract or Bonds. The Contractor shall perform the Work as altered, whether increased or decreased, and no allowances shall be made for anticipated profits. Payment to the Contractor for the changes in the quantities of work shall be made only for the actual quantities of work performed and material furnished at the unit prices set forth in the Contract, except as provided below.

a. When the quantity of work to be done or of material to be furnished under any item of the Contract is more than 125 percent of the quantity stated in the Contract, then either party to the Contract, upon demand, shall be entitled to negotiate for revised consideration on the portion of work above 125 percent of the quantity stated in the Contract.

b. When the quantity of work to be done or of material to be furnished under any item of the Contract is less than 75 percent of the quantity stated in the Contract, then either party to the Contract, upon demand, shall be entitled to negotiate for revised consideration on the Work performed.

c. Any consideration after that as set forth above shall be paid for as is hereinafter provided under Section 19.7. The foregoing notwithstanding, the quantity of work

to be done or of material to be furnished under any item of the Contract, or the total original Contract shall not be increased more than 25 percent or reduced by more than 25 percent without the written consent of the Contractor and City.

19.3 Changes in the Work: No change with respect to the Work, except in an emergency situation threatening life or property, shall be made by the Contractor without the prior written approval of the City. The Contractor shall deliver any request for a change in the Work, Contract price, and/or completion time in writing to the Director, Department of Public Works within ten (10) calendar days of the occurrence requiring the change. The Contractor shall be required to certify the cause of the change order and, if appropriate, length of time involved. Payment for such changes approved by the Director, Department of Public Works shall be as set forth in Section 19.7. This written request is a condition precedent to the consideration of any such request by the City.

19.4 Delays:

a. In the event a delay is caused by the City, the Director, Department of Public Works, any other separate contractor employed by the City, or any party for whom the Contractor deems the City responsible, or the agents and employees of any of them, the Contractor shall inform the City and the Director, Department of Public Works immediately at the time of the occurrence by the fastest means available and shall give written notice within a reasonable time, not to exceed ten (10) calendar days. The Contractor's notice to the Director, Department of Public Works shall specify the nature of the delay claimed by the Contractor, the cause of the delay, and the impact of the delay on the Contractor's work schedule to the fullest extent possible. The City will within a reasonable time, not to exceed ten (10) calendar days, respond to the Contractor's notice with a resolution, remedy, or direction to alleviate the delay or with a notice rejecting the claim for delay alleged to be caused by the City or parties for whom the City is responsible. If the delay is not then resolved, the Contractor may then submit a request for change order in accordance with Sections 19.3 and 19.5. In the event of other delays, the Contractor shall give the City and Director, Department of Public Works written notice within ten (10) calendar days of the occurrence causing the delay.

b. No extension of time or compensation shall be allowed for a delay if the Contractor failed to give notice in the manner and within the time prescribed in Subsection 19.4 (a). Furthermore, no extension of time shall be given or additional compensation allowed for any delay unless a claim therefore is made in writing to the City, with a copy to the Director, Department of Public Works, within ten (10) calendar days of the occurrence causing the delay. The claim shall state the cause of the delay, the number of days of extension requested, and any compensation requested by the Contractor. The Contractor shall report the termination of the delay to the City and Director, Department of Public Works not less than ten (10) calendar days after such termination. Failure to give notice of either the inception or the termination of the cause of delay or failure to present a claim for extension of time and/or monetary compensation within the times prescribed are conditions precedent to the assertion of any such claims by Contractor and shall constitute a waiver by Contractor of any such claims for compensation or extension based upon that cause.

c. Requests for compensation for delays must be substantiated by itemized data and records, clearly showing that the work delayed was progressing according to the approved schedule and that the costs are directly attributable to the delay in

the Work claimed. The Contractor shall provide written schedules demonstrating how the Work being delayed affects the approved schedule.

d. No extension of time, additional compensation, or change in the Contract price shall be allowed for any delays caused in whole or in part by the Contractor, any subcontractors, or any supplier. (For unavoidable justified delays, see Section 19.9 of these General Conditions.)

19.5 Change Orders: All change orders shall clearly define changes to the Work, the Contract amount or price, and the Contract time. Incomplete or partial change order requests may not be considered by the Director, Department of Public Works. All change orders must indicate that the Contract Time for Completion is not changed or is either increased or decreased by a specific number of days. Any change or requested change in the Contract price shall also be included in the change order request. The Contractor must provide written justification for an extension of the Time for Completion to the Director, Department of Public Works. The written justification must demonstrate an anticipated actual increase in the time required to complete the Work beyond that allowed by the Contract as adjusted by prior change orders or amendments to the Contract, not just an increase or decrease in the time needed to complete some portion of the total Work. Director, Department of Public Works approved increases or decreases in time required to complete the Work shall be added or deducted, respectively, to the Time for Completion. The change to time or Contract price allowed by each change order shall include all time and monetary impacts of the change, whether the change order is considered alone or with all other changes during the course of the Project. Failure to include a change to time and/or Contract price in a change order shall waive any claims the Contractor may have for any change to the time and/or Contract price unless the parties mutually agree in writing to postpone a determination of the change to time and price resulting from the change order. However, the Contractor shall continue with the Work as may be directed by the Director, Department of Public Works and shall not stop work on the Project unless directed to do so by the Director, Department of Public Works.

19.6 Extra Work: The City reserves the right to make alterations or changes in the Work as the Work progresses. When any work is necessary to the proper completion of the project which was not provided for in the Contract, the Contractor shall do such work, but only when and as ordered in writing by the Director, Department of Public Works. Payment for such extra work shall be made as hereinafter provided in Section 19.7.

19.7 Payment Methods for Extra Work: The extra work done by the Contractor as authorized and approved by the Director, Department of Public Works shall be paid for in the manner hereinafter described; and the compensation thus provided shall be accepted by the Contractor as payment in full for all labor, material, tools, equipment, incidentals, all superintendents' and timekeepers' services, all insurance, bonds, and all other reasonable overhead expenses incurred in the performance of the extra work. Payment for extra work may be made by one of the following methods, as agreed on in writing by the Director, Department of Public Works and the Contractor before said extra work is commenced, subject to all other conditions of the Contract:

a. Unit prices; or

b. Lump sum price; or

c. The cost of change in work plus ten percent (10%) of allowable costs. Allowable costs for purposes of this paragraph shall only include labor, material, sales tax, the rental of power tools and equipment actually used, or a reasonable price for the use of power tools and equipment owned by the Contractor based upon their life expectancy and purchase price, utilities, pro rata charges for foremen, and all payroll charges such as employer's FICA contribution, Public Liability and

Workers' Compensation Insurance, but only if all such costs are incurred as the direct result of the changes in the Work. The change in cost for labor and material bonds and for performance bonds relative to the value of the extra work shall be allowable cost but shall not be marked up.

19.8 Disputed Claims for Extra Work: If one of the payment methods set forth in Section 19.7 is not agreed on by the Director, Department of Public Works, the City may retain either an independent contractor to perform such extra work or use its own forces to perform such extra work and the Contractor shall cooperate fully with the independent contractor or City in its performance of the extra work. However, the Director, Department of Public Works may also direct Contractor to perform such extra work and any dispute will be handled as set forth in Section 31 of these General Conditions.

19.9 Change in Contract Time or Contract Price: The Contractor may request an extension of time or change in the Contract price should the Work be obstructed or delayed by any justified unavoidable delays not caused in whole or in part by the Contractor, any subcontractor, or suppliers. However, delays caused by weather conditions will not be considered justified unavoidable delays unless they are caused by unusual weather as set forth in Section 4.2 of the Instructions to Bidders, in which case only an extension of time may be considered by City, but no additional compensation will be allowed for unusual weather. Furthermore, Contractor agrees that for any delays not caused by the City or any delays beyond the control of the City, no additional compensation will be due the Contractor and no change in the Contract price will be allowed by the City, only an extension of the Contract time will be considered by the City. The Contractor shall deliver requests for changes in the Contract price and/or completion time in writing to the Director, Department of Public Works within ten (10) calendar days of the occurrence requiring the change. Approved changes that alter the time of the Contract shall extend the completion time by a period equivalent to the certified time lost by such occurrence. No change in Contract price and/or completion time shall be allowed if the above notice has not been properly given, such notice being a condition precedent to any such request by the Contractor. However, the Contractor shall continue with the Work as may be directed by the Director, Department of Public Works and shall not stop work on the Project unless directed to do so by the Director, Department of Public Works.

SECTION 20. PAYMENT FOR WORK

20.1 Monthly Construction Estimates: Monthly construction estimates shall be submitted to the Director, Department of Public Works, 215 Church Avenue, SW, Room 354, Roanoke, Virginia 24011, no more than once every thirty (30) calendar days.

20.2 Preparing Progress Payment Requests: In preparing construction estimates, the Contractor may request a progress payment based on the actual percentage of work completed during the preceding month. The estimate shall contain a breakdown of the total Contract amount; to include a separate breakdown of all approved change orders, into principal items of construction, showing the estimated quantity, unit price, and total for each item. In preparing progress payment requests, the material delivered on the site and preparatory work done may be taken into consideration, if properly documented, or as may be required by the Director, Department of Public Works so that quantities can be verified. In addition to material delivered on the site, material such as large pieces of equipment and items purchased specifically for the project, but stored off the site, may

be considered for payment, provided prior written approval is given by the Director, Department of Public Works.

20.3 Progress Payments: The City will make a progress payment to the Contractor on the basis of a duly certified and approved progress payment request for the work performed under the Contract. In the event that the City disagrees with the monthly construction progress payment request submitted by the Contractor, or in the event the As-Built Drawings are not being kept current, the City may withhold all or a portion of the progress payment until such dispute is resolved to the satisfaction of the City. If there are any objections or problems with the progress payment request, the City will notify the Contractor of such matters. If the progress payment request is approved by the City, payment will be made by the City to the Contractor not more than thirty (30) calendar days after such request has been approved. However, if there is an objection or problem with a progress payment request, the Contractor shall continue with the Work as may be directed by the Director, Department of Public Works and shall not stop work on the Project unless directed to do so by the Director, Department of Public Works. Any such disputes shall be handled as set forth in Section 31 of these General Conditions.

20.4 Retainage: To ensure proper performance of the Contract, the City shall retain, unless stipulated otherwise, five percent (5%) of each progress payment until Final Acceptance of all work covered by the Contract. The Contractor may request that such retainage be paid into an escrow account on certain Contracts, pursuant to Section 2.2-4334 of the Code of Virginia. (See also Sections 6.2 and 14.6 of Instructions to Bidders.)

20.5 Ownership of Material and Work: All material and work covered by progress payments shall become the property of the City. This provision shall not relieve the Contractor from the responsibility for all material and to maintain all completed work and to repair all damaged work. The Contractor shall not deem a progress payment as a waiver to complete the terms of the Contract or shift the risk of loss from the Contractor to the City. The Contractor warrants that Contractor has good title to all material, equipment, and supplies which Contractor uses in the Work or for which Contractor accepts payment in whole or in part.

20.6 Payments to Others by Contractor: The Contractor agrees that Contractor will comply with the requirements of Section 2.2-4354 of the Code of Virginia regarding Contractor's payment to other entities and that Contractor will take one of the two actions permitted therein within seven (7) calendar days after receipt of amounts paid to Contractor by the City. The Contractor agrees that Contractor shall indemnify and hold the City harmless for any claims resulting from failure of the Contractor to make prompt payments to all persons supplying him equipment, labor, tools, or material in prosecution and completion of the Work provided for in the Contract.

20.7 Final Payment: After the Final Acceptance of the Work by the City, and after Final Payment is requested in writing by the Contractor, and the Director, Department of Public Works has received and approved the items listed below, the City shall pay the Contractor the Final Payment, less all prior payments, damages, setoffs, liquidated damages, any amounts withheld from retainage, or any other amounts Contractor may owe the City for any reason whatever. Such final payment is subject to the Director, Department of Public Works receiving and accepting all documents to finalize the Work or Project, such as, but not limited to:

a. As-Built drawings, operation and maintenance manuals, written warranties (if applicable).
b. Affidavit of Payment of Claims.
c. Certificate of Final Acceptance.
d. Small Business, Minority-Owned Business, Women-Owned Business, Service Disabled Veteran-Owned Business Usage Status Form
e. Such other documents or items as the Director, Department of Public Works may request in writing from the Contractor.

20.8 Payment and Acceptance: No payment, final or otherwise, nor partial or entire use, occupancy, or acceptances of the Work by the City shall be an acceptance of any work or material not in accordance with the Contract, nor shall the same relieve the Contractor of any responsibility for any faulty material or workmanship or operate to release the Contractor or its surety from any obligation under the Contract or the Performance Bond or the Labor and Material Payment Bond.

20.9 Right to Audit and Maintenance of Records: The Contractor agrees that the City, and any approving Federal or State Agency or any of their duly authorized representatives, shall have access to any books, documents, papers, records, schedules and electronic data of the Contractor which are pertinent to this Project for the purpose of making an audit, examinations, excerpts, copies, or transcriptions and that Contractor will provide copies of such items to City upon City's request, at no cost to City. Contractor shall maintain all books, records, electronic data, and other documents relating in any way to this Contract or Project for a period of five (5) years after Final Acceptance.

SECTION 21. LIQUIDATED DAMAGES

If liquidated damages are provided for by the Contract, the following provisions shall apply:

a. Subject to the provisions of the General Conditions for extension of time allowed for completion of the Work, if the Work is not substantially completed by the date required in the Contract, the Contractor shall owe to the City, not as a penalty but as liquidated damages, the sum stated in the Contract for liquidated damages for each and every calendar day of delay in substantial completion.

b. Once the Work is substantially complete, the accrual of liquidated damages shall stop and the Contractor shall have thirty (30) calendar days in which to achieve Final Acceptance of the Work.

c. Provided, however, if Final Acceptance of the Work is not achieved by the thirtieth (30th) calendar day after substantial completion, and if any extension of time is not granted by the City, the Contractor shall owe to the City, not as a penalty, but as additional liquidated damages, the sum stated in the Contract as liquidated damages for each and every calendar day of delay in Final Acceptance. All such liquidated damages set forth in this Section 21 are in addition to any other damages the City may be entitled to recover from the Contractor.

SECTION 22. INSPECTION FOR SUBSTANTIAL COMPLETION AND FINAL ACCEPTANCE

22.1 Substantial Completion: The Contractor shall notify the City, in writing, that the Work will be ready for inspection to determine if it is substantially complete and ready for testing on or after a certain date, which date shall be stated in the notice. The notice shall be given at least ten (10) calendar days in advance of said date and shall be forwarded through the Director, Department of Public Works. Inspection and testing

shall take place at a time mutually agreeable to the Contractor, City, and Director, Department of Public Works. The inspection shall determine if substantial completion has been accomplished. If so, the Director, Department of Public Works will issue a Certificate of Substantial Completion and attach a written list of unfinished Work and defective Work, commonly referred to as a "punch list", which must be finished and corrected to obtain Final Acceptance.

22.2 **Request for Final Acceptance:** The Contractor shall notify the Director, Department of Public Works, in writing, that the Work will be ready for final inspection and testing on or after a certain date, which date shall be stated in the notice. That inspection and any necessary testing shall be conducted in the same manner as the inspection for substantial completion. When the Work is finally and totally complete, including the elimination of all known deficiencies, the Work shall be finally accepted by the City and final payment shall be made in accordance with Section 20.7 of these General Conditions.

22.3 **Final Inspection:** The Director, Department of Public Works will conduct the final inspection, and may elect to have other persons of his/her choosing also participate in the inspection. If one or more reinspection is required, the Contractor shall reimburse the City for all costs of reinspection or, at the City's option, the costs may be deducted from payments due to the Contractor.

22.4 **As-Built Drawings:** No Contract retainage will be released prior to receipt of all approved As-Built Drawings.

22.5 **Final Acceptance:** Upon successful completion of the final inspection and all Work required by the Contract, including, but not limited to, the delivery of the following documents and items; As-Built drawings; operation and maintenance manuals; written warranties; Certificate of Substantial Completion; and Affidavit of Payment of Claims; the Director, Department of Public Works will furnish a written Certificate of Final Acceptance of the Work to the Contractor. The Director, Department of Public Works may accept the Work for occupancy or use while asserting claims against the Contractor, disputing the amount of compensation due to the Contractor, disputing the quality of the Work, its completion, or its compliance with the Contract Documents, and the like.

22.6 **Release By Contractor:** The acceptance by the Contractor of the final payment or a payment designated as such shall be and does operate as a release by the Contractor of all claims by the Contractor against City and of all other liability of the City to the Contractor whatever, including liability for all things done or furnished in connection with the Work or the Contract.

SECTION 23. WARRANTY OF MATERIAL AND WORKMANSHIP

23.1 The Contractor warrants that, unless otherwise specified, all material and equipment incorporated in the Work under the Contract shall be new, in first class condition, and in accordance with the Contract Documents. The Contractor further warrants that all workmanship shall be of the highest quality and in accordance with the Contract Documents and shall be performed by persons qualified at their respective trades.

23.2 Work not conforming to these warranties shall be considered defective.

23.3 These warranties of material and workmanship are separate and independent from and in addition to any of the Contractor's other guarantees or obligations in this Contract, or that may arise by law.

SECTION 24. GUARANTEE OF WORK

24.1 **One Year Warranty:** The Contractor further guarantees and warrants the Work against defects or deficiencies in the Work and as to all material, equipment, and workmanship for a period of one (1) year from the date of Final Acceptance. However, any manufacturer's guarantees or warranties or any other guarantees or warranties required by the Contract Documents shall be for the period of time provided for therein.

24.2 The Contractor shall obtain and furnish to the City any available guarantees and warranties from manufacturers, installers, subcontractors, or others and any guarantees and warranties called for in the Contract and have such guarantees and warranties issued to the City, or transfer such guarantees and warranties to the City, in a timely manner. All guarantees and warranties shall be subject to the reasonable approval of the City. However, any such approval or disapproval does not relieve the Contractor of any of Contractor's guarantees and warranties. Contractor shall use its best efforts to ensure that all such guarantees and warranties do not contain any indemnity requirements from the City, any limitation of liability, any reduction of the applicable statute of limitations, any venue or forum selection other than the City of Roanoke, Virginia, or any requirement for mediation or arbitration. Any such language in a guaranty or warranty shall be deemed to be void and the Contractor along with the entity providing the guaranty or warranty shall be responsible for such guaranty or warranty with any such items being deemed deleted. All such guaranties or warranties shall be provided to the City before or within ten (10) days after Contractor's completion of the Work and the City may withhold payments to the Contractor until receipt of all such guaranties and warranties.

24.3 All guarantees and warranties from the Contractor or others, whether set forth above, in other parts of the Contract or other documents, or that may arise by law, shall be cumulative so as to maximize City's guarantee and warranty protection. The City, by accepting any of the guaranties or warranties provided for in the Contract does not waive, and specifically reserves any legal rights and remedies that the City may have for breach of the Contract and/or breach of any such guarantees or warranties.

24.4 **Defective Work:** The Contractor agrees it shall repair or replace, at Contractor's sole expense, and to the satisfaction of the Director, Department of Public Works, any work, material, equipment, or part that is found, by the Director, Department of Public Works, to be defective.

24.5 **Repairs:** If, within any guarantee period, defects are noticed by the Director, Department of Public Works which require repairs or changes in connection with the guaranteed work, those repairs or changes being in the determination of the Director, Department of Public Works rendered necessary as the result of the use of material, equipment, or workmanship which is defective, inferior, or not in accordance with the terms of the Contract, then the Contractor shall, promptly upon receipt of notice from the

Director, Department of Public Works, such notice being given not more than four weeks after the expiration of any such guarantee period, and without any expense to the City:

a. in satisfactory condition all guaranteed work and correct all defects therein; and

b. Make good all damage to the structure, site, equipment, or contents thereof, which in the determination of the Director, Department of Public Works is the result of the use of material, equipment, or workmanship which are inferior, defective, or not in accordance with the terms of the Contract; and

c. Make good any work or material or the equipment and contents of structures or the site disturbed in fulfilling any such guarantee.

24.6 **Warranty Extension:** In any case, where in fulfilling the requirements of the Contract or any guarantee embraced in or required thereby, the Contractor disturbs, damages or repairs any work guaranteed under the Contract, Contractor shall restore such work to a condition satisfactory to the Director, Department of Public Works and guarantee such restored work to the same extent and for a like additional period of time as it was originally guaranteed under this Contract.

24.7 **Correction of Defects:** If the Contractor, after notice, fails to proceed promptly, but in no event longer than thirty (30) calendar days after such notice, unless otherwise agreed to by the Director, Department of Public Works, to comply with the terms of the guarantee and/or correct the Work, the City may have the defects corrected by its own forces or another contractor and the Contractor and its surety shall be liable to the City for all costs and expenses incurred in doing so.

24.8 Nothing contained in this section shall be construed to establish a period of limitation with respect to any other obligation which the Contractor might have under the Contract Documents or the law of Virginia, including liability for defective work.

SECTION 25. STOP WORK ORDER

In the event that conditions exist such that no work can or should continue, other than the routine closing of the site, the Contractor may submit to the Director, Department of Public Works a request to stop work or the Director, Department of Public Works on his/her own may issue a Stop Work Order. The Director, Department of Public Works will, if he/she approves the request or issues the order himself/herself, deliver a written "Stop Work Order" to the Contractor stipulating the effective date and the Contract time remaining. The Work, other than the routine closing of the site, and Contract time shall not again be started until a written "Resume Work Order" is received by the Contractor from the Director, Department of Public Works. When the Work is stopped at the request of the Contractor and through no fault of the Contractor, the Contractor may only recover from the City payment for the cost of the Work actually performed, together with reasonable overhead and profit thereon up to that time, but profit shall be recovered only to the extent that the Contractor can demonstrate that it would have had profit on the entire Contract if it had completed the Work. The Contractor may not receive profit or any other type of compensation for parts of the Work not performed, including, but not limited to, home office overhead or any other such costs. The Contractor may also recover the actual cost of physically closing down the jobsite, but no other costs of the Stop Work Order. The City may offset any claims it may have against the Contractor against the amounts due to the Contractor. In no event shall the Stop Work Order to the Contractor relieve in any way the obligations of the

Contractor's surety on its payment and performance bonds. When work is stopped by the Director, Department of Public Works due to any fault of the Contractor, the Contractor may not recover any of the above costs or items or any other costs, profits, expenses, or damages of any type.

SECTION 26. TERMINATION OF CONTRACT FOR CAUSE

26.1 Termination for Cause: If the Contractor should file a petition for relief as a debtor under any applicable bankruptcy law or should be adjudged bankrupt, or if it should make a general assignment for the benefit of its creditors, or if a receiver should be appointed on account of its insolvency, the City may terminate the Contract. If the Contractor should refuse or should fail, except in cases for which extension of time is provided, to supply enough properly skilled workmen or proper material, or if it should fail to make prompt payment to subcontractors or suppliers of material or labor, or disregard laws, ordinances, or the written instructions of the Director, Department of Public Works, or otherwise fails to comply with any of the terms or provisions of this Contract including, but not limited to, poor services, work or material, then the City may terminate this Contract. In no event shall termination for cause terminate the obligations of the Contractor's surety on its payment and performance bonds.

26.2 Possession of Work: Upon termination of the Contract, the City may take possession of the premises and of all material, tools, and appliances thereon and finish the Work by whatever method the City may deem expedient. In such case the Contractor shall not be entitled to receive any further payment of any type. If the expense of finishing the Work, including compensation for additional managerial and administrative services, shall exceed the unpaid balance of the Contract price, the Contractor shall pay the difference to the City, together with any other cost or expenses of terminating the Contract and having it completed by others, together with any and all other damages the City may be entitled to from the Contractor.

26.3 Alternative Termination: If it should be judicially determined that the City improperly terminated this Contract for cause, then the termination shall be deemed to be a termination for the convenience of the City.

26.4 Termination Rights: Termination of this Contract under Section 26 or Section 27 is without prejudice and in addition to any other rights or remedies of the City against the Contractor.

SECTION 27. TERMINATION FOR CONVENIENCE OF CITY

27.1 Termination for Convenience: The City, at its discretion, may terminate this Contract at any time without cause, in whole or in part, upon giving the Contractor written notice of such termination. Upon such termination, the Contractor shall immediately cease work and remove from the jobsite all of its labor forces, equipment, and material as the City elects not to purchase or to assume in the manner hereinafter provided. Upon such termination, the Contractor shall take such steps as City may require to assign to the City the Contractor's interest in all subcontracts and purchase orders designated by the City. After all such steps have been taken to the City's satisfaction; the Contractor shall receive as full compensation for termination and assignment only the following:

a. All amounts then otherwise due under the terms of this Contract for actual work performed and approved by the City; and

b. Reasonable compensation for the actual cost of demobilization incurred by the Contractor as a direct result of such termination. The Contractor shall not be

entitled to any compensation for lost profits or for any other type of contractual compensation or damage, other than those provided by the preceding sentence, including any on site or home office overhead. Upon payment of the foregoing, the City shall have no further liabilities or obligations to Contractor of any nature.

27.2 Termination Effect on Surety: In no event shall termination for the convenience of the City terminate the obligation of the Contractor's surety on its payment and performance bonds.

SECTION 28. PRECONSTRUCTION CONFERENCE

The Director, Department of Public Works shall notify the Contractor as to the location, date, and time of a preconstruction conference to confirm procedures for processing construction estimates for payment and related submissions and to discuss other matters pertaining to scheduling and execution of the Work.

SECTION 29. PROJECT SIGN(S)

The Contractor shall supply, erect, and maintain Project Sign(s) in accordance with the City of Roanoke Standard Detail. The sign(s) shall be located as directed by the Director, Department of Public Works. The Contractor shall not display any other signs or advertisements.

SECTION 30. ASSIGNMENTS

The Contractor shall not assign or transfer this Contract in whole or in part except with the prior written consent of the City, which consent shall not be unreasonably withheld. If consent to assign is given, no such assignment shall in any way release or relieve the Contractor from any of the covenants or undertakings contained in this Contract and the Contractor shall remain liable for the Contract during the entire term thereof.

SECTION 31. CONTRACTUAL DISPUTES

Contractual claims, whether for money or for other relief, including any disputes as to change orders or extra work, shall be submitted, in writing, no later than sixty (60) calendar days after final payment or payment designated by the City as a final payment; however, written notice of the Contractor's intention to file such claim must be given at the time of the occurrence or beginning of the work upon which the claim is based. Such notice is a condition precedent to the assertion of any such claim by the Contractor. A written decision upon any such claims will be made by the City Manager or his/her designee (hereafter City Manager) within thirty (30) calendar days after submittal of the claim and any practically available additional supporting evidence required by the City Manager. The Contractor may not institute legal action prior to receipt of the City's decision on the claim unless the City Manager fails to render such decision within one hundred twenty (120) calendar days from submittal of its claim. The decision of the City Manager shall be final and conclusive unless the Contractor within six (6) months of the date of the final decision on a claim or from expiration of the 120 day time limit, whichever occurs first, initiates legal action as provided in Section 2.2 - 4364, of the Code of Virginia. Failure of the City to render a decision within said one hundred twenty (120) calendar days shall not result in the Contractor being awarded the relief claimed nor shall it result in any other relief or penalty. The sole result of the City's failure to render a decision within said one hundred twenty (120) calendar days shall be Contractor's right to immediately institute legal action. No administrative appeals procedure pursuant to Section 2.2 - 4365, of the Code of Virginia, has been established for contractual claims under this Contract.

CITY OF ROANOKE, VIRGINIA

SUPPLEMENTAL GENERAL CONDITIONS

These Supplemental General Conditions modify, change, and/or add to the General Conditions as indicated below:

A. The Virginia Department of Transportation (VDOT) requires that certain forms and documents be included in the ITB and any resultant contract for this Project. Therefore, these items together with any documents or items provided by the City or referred to in any of the documents are intended to be and should be construed to be consistent with each other whenever possible. If a court or agency of competent jurisdiction determines that a conflict should exist between them, and to the extent of any such conflict, the VDOT documents shall take precedence unless any Federal and/or State rules, regulations, terms, and/or provisions shall require otherwise, in which case they will take precedence. Furthermore, each Bidder, as well as the Successful Bidder, shall notify the Director, Department of Public Works, in writing, if any such conflict(s) should arise among the ITB and/or resultant contract documents and identify such conflict(s) to the Director, Department of Public Works. References in any VDOT documents to State, VDOT, Department, and/or Department Engineer or similar terms shall also be deemed to include the City and/or Director, Department of Public Works where applicable and the Successful Bidder hereby acknowledges and agrees that the City can enforce all such items against the Successful Bidder for this Project. Bidders are advised to refer to the other parts of the ITB, especially the Supplemental General Conditions, for further information on the above items.

B. Bidders are advised that this ITB and any information or documents provided pursuant to this ITB are subject to the Virginia Freedom of Information Act and the Federal Freedom of Information Act and the Bidder must comply with the provisions of those Acts to protect any documents the Bidder may want protected from disclosure pursuant to the provisions of those Acts.

REMAINDER OF PAGE INTENTIONALLY LEFT BLANK

Section 01000

Special Conditions

1. Part 1 General

1.1. **Description and Location of Work -**This project is generally described as the installation of approximately 1,731 linear feet of various storm drain pipes, 15 storm drain structures, yard drains, dry swales, asphalt milling and overlay, utility relocation, site restoration, and associated work on Laurel Ridge Road and Lewiston Street, NW. This short description, however, shall not in any way be construed to limit the Contractor's obligation for compliance with the Contract Documents.

1.2. The Plan set is incomplete unless accompanied by the City Project Manual. Likewise, this Project Manual is incomplete unless accompanied by the Plans. The Plan set was developed using a 24"x36" paper size.

1.3. Unless specified otherwise the Work shall be in accordance with the Virginia Department of Transportation Road and Bridge Specifications (VDOT RBS).

1.4. All products and materials shall be new and in first class condition.

1.5. **Access** – The Contractor shall provide the City's Project Manager, City's Inspector, or other City representatives, safe access to all areas of work throughout the course of the construction project and for final inspection. Safe access includes the use of man-lifts, operated by a Contractor's representative, or any other such equipment as needed to reach areas of inspection. The Contactor shall also coordinate and provide access to driveways and properties along the Project site during construction unless specifically shown on the Plans.

1.6. A Request for Information Form is attached in Appendix C for the Contractor's use.

1.7. **Contractor Superintendent** – At all times during the project, the Contractor shall be required to have a competent Superintendent on site. The Contractor shall designate the Superintendent at the pre-construction conference. Under no circumstances, shall the Contractor designate multiple Superintendents. The designated Superintendent shall have adequate social skills to interact with City Inspector and City Project Manager. Not having the designated Superintendent on-site during any work operations, including subcontractor's work operations, may result in a Stop Work Order issued by the City Project Manager. The Contractor shall be responsible for any delays and monetary losses resulting from the Stop Work Order. Once the designated Superintendent has returned to the project site, a Resume Work Order may be issued by the City Project Manager.

1.8. In accordance with Section 29 of the General Conditions, one week prior to mobilization for construction activities, the Contractor shall erect a construction sign on site to notify

the business owners, commuters and residents about the construction activities. The sign shall indicate:

- Project Name
- Contractor Name
- Construction Start Date

Additional signs shall be required at any detours or road/alley closures one week prior to mobilization. See Appendix A for a detail.

1.9. **Safety**

1.9.1. Citizen and workman safety shall be given top priority at all times.

1.9.2. See Section 17 of the General Conditions for additional requirements.

1.9.3. The Contractor shall comply with "Rules and Regulations Governing Construction, Demolition, and All Excavation" as adopted by the Safety Codes Commission of the Commonwealth of Virginia, Occupational Safety and Health Administration (OSHA).

2. Traffic Maintenance, Work Area Protection, and Access – See bid line item in Section 01200 Measurement and Payment.

3. Utilities – See Section 02100

4. Required Permits

4.1. The Contractor shall obtain a City of Roanoke business license before any permits are issued. Contact the City Commissioner of the Revenue for information on obtaining a license at 1-540-853-2521.

4.2. City of Roanoke Right of Way Excavation (ROWE) Permit, administered by the City Transportation Division, for any work performed in the City of Roanoke Right of Way.

4.2.1. Contractor shall apply and pay for the permit at the Development Assistance Center (DAC) located in the municipal building - 215 Church Ave, SW Room 170). City projects are exempt from Right of Way Excavation Permit Fees. However, the Contractor is required to have a bond with a two (2) year warranty provision for the ROWE permit. This bond is additional and separate from the Contractor's Performance Bond required by the City of Roanoke Stormwater Division.

4.3. A City of Roanoke Land Disturbing Permit shall be required. The Contractor shall be required to have a Registered Land Disturber, as specified by the Virginia Department of Environmental Quality. The City Engineering shall pay the application fee associated with the Land Disturbing permit. The City of Roanoke permit number is CP150030.

4.4. Permits for Off-Site Soil Disposal and Soil Borrow Areas

4.4.1. The City of Roanoke Planning Department may require permit verification (City and County land disturbing permits) for any off-site soil disposal and soil borrow areas. It is the Contractor's responsibility to coordinate and comply with Planning Department requirements.

5. Grass / Landscaping Establishment

5.1. Substantial completion of the project may occur outside of the permanent seeding window. Therefore, the contractor will apply temporary seed and mulch after final grades are established. The City project manager will issue a Stop Work Order until the permanent seeding window is opened (September 1st). Once in the permanent seeding window, the City project manager will then issue a Resume Work Order and a time extension will be given. The Contractor will then apply permanent seed, establish final stabilization and request final acceptance. Retainage will not be paid until final acceptance is issued by the City project manager. The Contractor will not be reimbursed for remobilization due to the seeding growth window. Unless noted otherwise in the specifications, Southern Lawn shall be used as the permanent seed mixture.

5.2. Grass and landscaping establishment is required before the City issues final acceptance. Failure to establish grass and landscaping may result in the issuance of liquidated damages as specified under the Contract.

6. Inspectors

6.1. The City of Roanoke shall have a Construction Inspector assigned to this project.

6.1.1. The construction inspector reports directly to the City of Roanoke Project Manager.

6.1.2. The Inspector shall be responsible for checking quality control, conformance of work with respect to project documents, and quantities for pay requests.

6.1.3. Contractor shall give the Inspector proper notice for paving operations and concrete pours.

6.1.3.1. Inspector shall be present during all concrete pours and paving / tacking operations.

6.1.4. Upon substantial completion of the project, the inspector shall develop a punch list of items to be resolved before final acceptance.

6.1.5. Inspectors shall be responsible for checking work for acceptance within warranty periods.

6.2. If sanitary sewer or water distribution work is being performed within the project scope, a Western Virginia Water Authority (WVWA) construction inspector may be assigned to the Project.

6.3. The Contractor is warned that only the City Project Manager can authorize additional work or changes in scope. Proceeding with work at the direction of the WVWA or any other entity is the Contractor's risk.

6.4. The Contractor shall remove from the project site any employee or subcontractor employee deemed disorderly in accordance with Section 5.2 of the General Conditions.

7. Erosion and Sediment Control

7.1. Payment for Erosion and Sediment Control devices shall not only include installation and maintenance of the device but also the removal and disposal of the device after final stabilization is achieved. Additional mobilization for disposal of Erosion and Sediment Control devices shall not be a basis for an increase in Contract amount.

8. Demolition Material / Excess Building Materials / Excess Soil Material - Contractor shall not provide any adjoining property owners along the Project Site (citizens or businesses) with any demolition materials, excess building materials, or excess soil material.

9. Geotechnical Reports – Appendix E

9.1. No geotechnical investigations have been performed for this project.

10. Environmental Reports – Appendix F

10.1. No environmental investigations have been performed for this project.

11. Storage of Fuel Tanks

11.1. No fuel tanks shall be stored overnight on the City right-of-way system or project site.

End of Section

Section 01100

Hierarchy of Construction Documents

1. Part 1 General

1.1. The General Conditions, Supplemental General Conditions, Plans, Technical Specifications, Virginia Department of Transportation Road (VDOT) Road and Bridge Specifications, VDOT Special Provisions/Supplemental Sections are parts of the Contract. A requirement occurring in one shall be as binding as though occurring in all. They are intended to be complementary and to describe and provide for a complete work. In case of a discrepancy, the following order of priority will apply, with the highest governing item appearing first and the least governing item appearing last:

1.1.1. City Technical Specifications
1.1.2. City General Conditions
1.1.3. City Supplemental General Conditions
1.1.4. Plans. Calculated dimensions, unless obviously incorrect, will govern over scaled dimensions.
1.1.5. VDOT Special Provisions
1.1.6. VDOT Road and Bridge Specifications

End of Section

Section 01200

Measurement and Payment

1. General

1.1. **Unit Prices**

1.1.1. Unit prices on the Bid Form shall include the cost and profit of providing all labor, materials, testing, tools and equipment necessary to perform all work in accordance with contract documents. No separate payment shall be made for incidental work relating to Bid Items.

1.2. **Basis of Payment**

1.2.1. The Contract is based on the unit prices listed on the Bid Form. The estimated quantities listed on the Bid Form are for the purpose of bid comparisons. All bid item payments shall be made based on actual provided quantities measured and accepted in place.

1.2.2. Include the cost for items not listed in the Bid Form, which are mentioned in the specifications, indicated on the drawings, or normally a part of the work described by the Contract Documents, in the cost of the appropriate items which are listed in the Bid Form.

1.2.3. No separate payments shall be made for work, material, equipment, or other expense which is not part of construction items listed in the Bid Form.

1.2.4. Payment can only requested for in-place materials. Payment for stored materials, on-site or off-site, can not be requested.

2. Payment for Work

2.1. Pay requests shall be submitted in tabular form including all pay items listed on the bid form and the unit price for each pay item along the total completed quantity for each item. The form shall have signature lines for the Contractor, City of Roanoke Project Manager, and City of Roanoke Inspector. Pay requests are to be limited to one per thirty (30) calendar days.

3. Products – Not Used

4. Execution - Each bid item shall include full compensation for performing the work specified in the bid items and furnishing all materials, labor, tools, equipment, profit and incidentals as required. Each bid item shall be paid on a percentage completed for that bid item unless otherwise noted.

4.1. **Mobilization** – This bid item shall be paid at a lump sum price. This bid item shall include the performance of construction preparatory operations, including the movement of personnel and equipment to the project site, installation of project signs, material carrying costs, exploratory underground utility work on the storm drain alignment, payment of permits, payment of performance and payment bond, bond for Right of Way Excavation permit, and other insurance premiums and for establishment of facilities necessary to begin work on a substantial phase of the contract. The first payment of 50% of the lump sum price may be requested on the first estimate following partial mobilization and initiation of construction work. The second and final payment request may be requested on the next estimate following completion of substantial mobilization.

4.1.1. No additional payment shall be made for demobilization or remobilization due to shutdowns, removal of E&S devices, temporary stop work orders due to seeding windows, suspensions of work or for other mobilization activities.

4.2. **Construction Stakeout Survey** -This bid item shall be paid on lump sum basis. Pay request may be made based on the percentage of completion. This bid item shall include staking out all proposed improvements, checking elevations at utility crossings and connections, checking and adjusting curb elevations and heights, storm drain structures and pipe slopes, all grades to ensure positive drainage, and all other survey services necessary to complete the Work. The unit cost shall also include As-built Plans for all storm drain pipes and structures installed. Contractor shall be responsible for providing As-built Plans.

4.3. **Maintenance of Traffic and Work Area Protection** – This bid item shall be paid on a lump sum basis. The lump sum price shall include furnishing and installing all materials, removal and installation of existing signs, detour signs, and manpower in accordance with VDOT RBS. The lump sum price should also include maintaining the work area in accordance with Virginia Work Area Protection Manual. Pay requests may be made for this item based on a percentage of completion for the project. All traffic control shall be subject to approval by the City Traffic Engineer (Transportation Department 540-853-2385). Changes to the traffic control plan, as directed by the City Traffic Engineer, shall not be a basis for additional compensation. The Contractor shall submit a traffic control plan for review and approval prior to mobilization. All lane and street closures and detours shall be coordinated with the Transportation Division. Note that the Stormwater and Transportation Divisions are separate divisions in the Public Works Department.

4.4. **Demolition** – This bid item shall be paid on a lump sum basis. Payment for this item is for the proper removal, disposal, adjustment and replacement of all items, including but not limited to storm drain pipes and structures, existing culvert pipe within proposed dry swales and ditches, and existing tree and planting of a new tree in like-kind at approximately station 3+00, as indicated on the plans. Payment shall also include removing and reinstalling traffic signs posts and mailboxes as necessary, flowable fill as indicated, plug/grout work on existing structure 8 and 9, and grading to fill ditch at existing structure 9. Pay request may be made on a percentage of completion.

4.5. **Asphalt Milling –** This bid item shall be paid on a square yard (SY) basis. The bid item shall include all work required to mill to a depth of 1 ½ inches in accordance with the Contract Documents and VDOT RBS.

4.6. **Asphalt Paving/Overlay, VDOT SM-9.5D –** This bid item shall be paid on a tonnage (Tons) basis. The price shall include cost of delivery, placing, and compacting each course in accordance with Contract Documents. Also included in the price shall be the work to accommodate all utility openings in the pavement, all prime coat and tacking activities. This includes valve boxes, existing/new manhole opening, etc. Contractor shall note that aggregate in asphalt shall be non-polishing.

4.7. **Tree Protection –** This bid item shall be paid on a unit basis. Payment shall include the proper installation of tree protection erosion and sediment control measures as shown and specified on Plans.

4.8. **Inlet Protection –** This bid item shall be paid on a unit basis. Payment shall include the proper installation of storm drain inlet protection erosion and sediment control measures as shown and specified on Plans.

4.9. **Culvert Inlet Protection –** This bid item shall be paid on a unit basis. Payment shall include the proper installation of culvert inlet protection erosion and sediment control measures as shown and specified on Plans.

4.10. **Topsoil –** This bid item shall be paid on a cubic yard (CY) basis. Payment shall include the proper installation of topsoil as shown and specified on Plans and Technical Specifications.

4.11. **Temporary and Permanent Seeding –** This bid item shall be paid per acre basis. Payment shall include the proper installation and establishment of vegetation as erosion and sediment control measures as shown and specified on Plans and Technical Specifications.

4.12. **Stormwater Conveyance Channel –** This bid item shall be paid on a linear foot basis. Payment shall include the proper installation of the stormwater ditch and matting as shown and specified on Plans.

4.13. **Dry Swales, complete with underdrain –** This bid item shall be paid on a lump sum basis. Payment for this item is for proper installation of the dry swale as shown and specified on Plans. Please note that 6” x 6” pressure treated timber shall be used in lieu of riprap as check dam for the dry swale. See Appendix D for check dam detail.

4.14. **Curb and Gutter (City Standard)**

4.14.1. This bid item shall be measured in linear feet along the face of curb, complete in place. No additional compensation shall be allowed for radial curb.

4.14.2. This bid item shall include excavation; backfill and compaction of VDOT 21A Aggregate; forming using steel forms in good condition (including face form), placement, finishing, curing, and hot/cold weather protection of concrete; expansion and crack control joints, neat saw-cutting of existing pavement; and asphalt restoration in front of the curb and gutter system.

4.14.3. This bid item shall include demolition of existing curb and gutter, demolition to provide a neat, uniform tie-in, demolition of existing pavements and shoulder restoration behind the curb.

4.15. **Storm Drain Pipe** – This bid item shall be paid on linear foot basis. Storm drain pipe shall be measured in linear foot along the centerline of the pipe for the size and type of pipe specified from end of pipe to end of pipe. The unit cost shall include the cost of saw-cutting asphalt pavement, excavating and disposal of material, furnishing, trenching, and installation of the pipe along with bedding material, backfill material and VDOT BM-25 installation. Before requesting payment for this line item, the BM-25 top layer must be installed. The unit price shall also include core-drilling new and existing manholes.

4.16. **Storm Drain Pipe Diff** – This bid item shall be paid for on a linear foot basis for the difference in pipe to convert from a reinforced concrete pipe (RCP) in the base bid to a polypropylene pipe (PP). A negative bid number shall indicate a reduction in the price whereas a positive number shall indicate a price increase. Storm drain pipe shall be measured in linear foot along the centerline of the pipe for the size and type of pipe specified from end of pipe to end of pipe. The unit cost shall include the cost of saw-cutting asphalt pavement, excavating and disposal of material, furnishing, trenching, and installation of the pipe along with bedding material, backfill material and VDOT BM-25 installation. Before requesting payment for this line item, the BM-25 top layer must be installed. The unit price shall also include core-drilling new and existing manholes.

4.17. **Storm Drain Structures** – This bid item shall be paid on a unit basis. Storm drain structures shall be counted individually, including manholes, end walls, drop inlets and curb inlets. The unit price shall include the cost of furnishing and installing the structure along with bedding and backfill material. The unit price for each structure shall also include grading around storm drain structures, connecting existing pipe to new structure, and any required accessories such as frame and cover, inlet shaping and core-drilling.

4.18. **24" Yard Drain** – This bid item shall be paid on a unit basis. Payment shall include the proper installation of the yard drain including but not limited to all connections, grate top per manufacturers recommendation, and as shown and specified on Plans. See Appendix E for connection to reinforced concrete pipe.

4.19. **Storm Cleanout** – This bid item shall be paid on a unit basis. Payment shall include the proper installation of the cleanout as shown and specified on Plans.

4.20. **Rock Removal** – This bid item shall be paid on a cubic yard basis. The unit price shall include excavation, blasting (if allowed), transporting, and disposal of excess or unsuitable material. Pay request may be made for this item based on the in place measurement of exposed by undisturbed rock including required over-excavation for bedding as authorized by the City Project Manager.

4.21. **Water Main Adjustments** – This bid item shall be paid on a unit basis per location. This bid item shall include labor, equipment and all materials necessary to install the ductile iron (DI) water line in accordance with Plans and Western Virginia Water Authority (WVWA) specifications. The unit price shall also include materials, excavation, backfill, and other work for complete installation.

4.22. **Water Meter Adjustments** – This bid item shall be paid on a unit basis per location. This bid item shall include labor, equipment and all materials necessary to adjust/raise water meter to match finish grade in accordance with Plans and Western Virginia Water Authority (WVWA) specifications.

4.23. **Water Service Line Adjustments** – This bid item shall be paid for on a linear foot basis. This bid item shall include labor, equipment and all materials necessary to vertically adjust/raise the water service line within the limits of the road asphalt pavement for the installation of the storm drain pipes in accordance with Plans and Western Virginia Water Authority (WVWA) specifications.

End of Section

Section 01350

Submittals

1. General

1.1. Submittals shall include all anticipated shop drawings, product data, and samples as defined in the Contract Documents and also include certificates, test data, and other submitted data required to demonstrate compliance with the contract documents. See General Conditions Section 14 for more information.

1.2. Submittal Register – Email submittals to josephus.johnson-koroma@roanokeva.gov (See blank form in Appendix B for cover transmittal)

Submittal Number	Description
1	**Schedule
2	**Traffic Control Plan
3	Contractor Superintendent – Contact Information
4	VDOT Precast Drainage Structure Certification
5	Polypropylene Pipe Product Data (if bid alternate is awarded)
6	Yard Drain Grate Data Sheet
7	Compaction Tests
8	Incidental Concrete Mix Designs
9	Flowable Fill Mix Design
10	Topsoil Analysis
11	Bioretention Soil Mix Analysis
12	Seeding Mix
13	Liquid Asphalt Source
14	Asphalt Mix Design (Base and Surface Mix)

**** - Shall be submitted within 14 calendar days from the date that the Contract is fully executed.**

1.3. Resubmission -Change or correct submittals as required by the City project manager or City's consultant.

1.4. City Procedures - City's Review: Submittals will be reviewed with reasonable promptness. Submittals will be stamped by the City with one of the five following actions:

1.4.1. "Approved" indicates approval with no exception taken and the plan of work shown may proceed. However, the City's approval of any submittal shall not relieve the Contractor from the responsibility of complying with all requirements of this Contract, including the obligation to provide submittals that are accurate and complete. The City assumes no responsibility for figured dimensions on shop drawings. In addition, the

City assumes no responsibility for concrete compression strength tests even after the mix design has been approved.

1.4.2. "Approved as Noted" indicates approval subject to the noted corrections. Ordering or fabrication of work shown may proceed on the basis of corrections indicated.

1.4.3. "Correct and Resubmit" indicates that additional information or changes (as noted) are required prior to taking further action. Corrections shall be made to the submittal and it shall be resubmitted. Ordering or fabrication of work shall not proceed.

1.4.4. "Disapproved" indicates information provided reveals that submittal does not conform to the contract requirements. Submittal conforming to the contract requirements shall be submitted for approval.

1.4.5. "No Action Taken" indicates one of the following: Submittal incomplete and a proper review cannot be performed, Insufficient copies submitted, Transmittal form incomplete, Contractor's certificate approving submittal not signed or missing, Submittal not required and the contract documents do not require the City to take action on this item, and Other causes or reasons as noted.

1.5. Changes After Approval – Contractor shall not make any changes in submittal marked "Approved" or "Approved as Noted" without obtaining the prior written consent of the City. If such written consent is obtained, revise the submittal to show fully the altered parts of the work and resubmit according to the procedures specified herein. State on resubmitted plans that the work shown supersedes and voids identified parts of the same work previously shown. Give full identification on the drawings previously approved by the City and the date of such action.

1.6. Proceeding without Approval - Proceeding with any construction and ordering or fabricating materials before all relevant drawings have been "Approved" or "Approved as Noted" shall be done at the Contractor's sole risk.

1.7. Submittals from other Previous City Projects or from other City Contracts - Using "Approved" Submittals from other City projects or other City Contracts shall not be a basis for approval for this specific Contract.

End of Section

Section 01500

Temporary Facilities

1. General

1.1. Section includes temporary utilities, temporary sanitary facilities, staging and storage, protection of installed work, job site office, and protection of property, employees, and general public.

1.2. Related Sections – Not Used

1.3. References (latest Edition and Errata) – Not Used

.

1.4. Quality Assurance – Not Used

1.5. Submittals – Not Used.

1.6. Use Charges: No cost or usage charges for temporary services or facilities are chargeable to the City. Cost or use charges for temporary services or facilities or for operation of permanent utilities shall not be accepted as a basis of claims for an increase in the contract sum.

1.7. Use of Existing Facilities – Contractor shall not use City existing buildings/parking garages for storage, vertical transportation, toilets, or other construction requirements.

1.8. Temporary Electricity and Lighting -Contractor shall arrange for power and lighting and pay costs for service and power used.

1.9. Temporary Water - Contractor shall arrange for water for construction purposes and pay costs for installation, maintenance and removal, and service charges for water used.

1.10. Temporary Sanitary Facilities - Contractor shall arrange and pay for toilet facilities and maintain those facilities in accordance with the public health authority having jurisdiction.

1.11. Staging and Storage Areas - Contractor shall arrange and pay any associated costs for stage and storage areas. The City shall not be responsible for designating any staging and storage areas.

1.11.1. Use of the street or right of way for staging or storage shall be coordinated with the City of Roanoke Transportation Department. The City of Roanoke Stormwater Division shall not coordinate such effort.

1.11.2. Use of a City park for staging and storage shall be coordinated with the City of Roanoke Parks and Recreation Department. The City of Roanoke Stormwater Division shall not coordinate such effort.

1.11.3. Use of a City parking garage for staging and storage shall be coordinated with the City of Roanoke / Hotel Roanoke parking services. The City of Roanoke Stormwater Division shall not coordinate such effort.

1.11.4. Contractor shall provide approved construction fencing for protection of the public as a part of the work as required.

1.12. Protection of Installed Work - Contractor shall provide temporary and removable protection for installed products as required. Contractor shall prohibit traffic from landscaped areas.

1.13. Protection of Property, Employees, and General Public

1.13.1. Contractor shall provide fences, planking, bridges, bracing, sheeting, shoring, lights, barricades, and warning signs as necessary to protect City's property, adjacent property, employees, and general public, and comply with applicable federal, state, and local regulations as required.

1.13.2. Trees, Vegetation, and Pavement: Protect from damage existing lawns, trees, and shrubs to remain and existing fences, roads, walks, and curbs not indicated to be removed. Repair or replace damage caused by operations under this contract.

1.14. Removal

1.14.1. Completely remove temporary facilities when their use is no longer required. Repair and clean areas damaged by temporary installations.

1.14.2. Restore permanent facilities used for temporary services to their original condition.

1.15. Job site office – Not required.

2. Products – Not Used

3. Execution – Not Used

End of Section

Section 02050

Work Area Protection, Maintenance of Traffic (MOT), and Access

1. General

1.1. Traffic Maintenance - All traffic control shall be subject to approval by the City Traffic Engineer (Transportation Department 540-853-2385). The City Traffic Engineer is not the City Project Manager. Changes to the traffic control plan, as directed by the City Traffic Engineer, shall not be a basis for additional compensation. The Contractor shall submit a traffic control plan for review and approval prior to mobilization. All lane and street closures and detours shall be coordinated with the Transportation Department. Note that the Stormwater and Transportation Departments are separate departments. Traffic control plans shall be submitted within the specified number of days outlined in the Submittals (Section 01350) portion of this specification.

1.2. Any sign, to be posted on the job site/work zone for more than 72 hours, must be anchored into the ground with a steel/wooden post. Placing signs on trees, existing road sign posts, or mailbox posts, etc. shall not be allowed.

1.3. Work Area Protection – The Contractor shall maintain the work area in accordance with the Virginia Work Area Protection Manual, latest edition. The City shall not be responsible for any portion of work area protection or safety.

1.4. If a temporary road closure is required on the project, a traffic control plan conforming to the Virginia Work Area Protection Manual shall be submitted to the City of Roanoke for approval prior to starting construction. Contractor shall be required to provide all signage and devices in accordance with the Virginia Work Area Protection manual. In addition, the Contractor shall provide and maintain all signs for road/alley detours. **The City of Roanoke shall <u>not</u> provide any signs.**

1.5. Access - Coordinate citizens' access to driveways as much as possible. Access to properties along the project route shall be maintained during construction.

1.6. Contractor shall be responsible for providing all signage for the project. The Contractor shall not rely on City personnel to provide or maintain any signage.

1.7. There may be other Contractors in the adjoining areas. Incidental coordination with the Contractors may be required.

2. Products – Not Used

3. Execution – Not Used

Section 02100

Existing Underground Utilities (Public and Private)

1. General

1.1. This Section includes the requirements for identifying, marking, and determining the location of underground utilities, both public and private. This Section applies to the following underground utilities: electrical lines, cable lines, communication lines, fiber optic lines, traffic light wires, potable and non-potable water lines, processed water lines, storm drain lines, sanitary sewer lines, natural gas lines, and petroleum lines.

1.2. The Contractor shall contact Miss Utility (811 or 1-800-552-7001) and a private utility locating service, if necessary, for location marks of utilities at least 48 hours prior to construction, or as far in advance as necessary to not interfere with the progress of the work.

1.3. The Contractor shall comply with the provisions and requirements of the Overhead High Voltage Safety Act (Section 59.1-406, et. Seq., of the Code of Virginia).

1.4. Existing utilities along the project route, or on the project site, are shown on the Plans based on available records. The Contractor acknowledges that there may be unknown public or private utilities that are not shown on the Plans. The location of all known utilities (both public and private) shall be verified prior to the start of construction. Existing utilities shall be supported and maintained as necessary during construction.

1.5. When connecting into existing gravity utility systems, the Contractor shall verify tops and inverts of all existing structures, and expose and investigate any potential utility conflicts before fabrication of new structures.

1.6. The City shall not relocate any existing utilities unless noted on the Plans. Contractor shall work around existing utilities as required. This may include shoring other utilities, bracing utility poles near trenching, etc.

1.7. The Contractor shall pothole several locations, as necessary, to determine the depth of existing underground utilities before the procurement of storm drain in that proximity. The hole created due to potholing shall be filled with flowable fill up to existing grade level. The cost for this work shall be included to the cost for mobilization.

1.8. Utility Relocation as shown on Plans

1.8.1. Where shown on the Plans, the Contractor shall coordinate construction with utility companies or owners where existing utilities need to be relocated or adjusted. The Contractor shall allow adequate time for the relocation of utilities by utility companies should such be necessary. No additional time or compensation shall be provided for delays that result from relocation of utilities.

1.9. Existing Utility Conflict with Proposed Construction.

1.9.1. If the Contractor suspects that there is an existing utility conflict with proposed construction then the Contractor shall expose the suspect utility that may be in conflict with the work at the Contractor's expense. Should the Contractor believe that a conflict exists; the Contractor must provide a plan and profile of sufficient scale and detail to clearly show the conflict with all dimensions. It is the responsibility of the Contractor to prove that the conflict exists. The City Project Manager may require that the Contractor's plan and profile showing the conflict be prepared and sealed by a licensed surveyor registered in Virginia.

2. Products – Not Used

3. Execution – Not Used

Section 02110

Exploratory Underground Utility Work

1. General

1.1. This Section includes the requirements for determining the horizontal and vertical location of existing underground utilities. Specific locations for the exploratory work shall be shown on the Plans. Exploratory underground work shall commence during mobilization and shall be integrated into the maintenance of traffic and work area protection plans. Exploratory work shall be completed working in a direction downstream to upstream.

1.2. Related Sections:

1.2.1. Section 02100 - Existing Underground Utilities (Public and Private)

1.3. References (latest Edition and Errata) – Not Used

2. Products – Not Used

3. Execution – Not Used

3.1. The Contractor shall contact Miss Utility (811 or 1-800-552-7001) and a private utility locating service, if necessary, for location marks of utilities at least 48 hours prior to exploratory, or as far in advance as necessary to not interfere with the progress of the work.

3.2. The Contractor shall give City Project Manager 48 hours notice before beginning exploratory work so a Surveying Technician, paid for by the City, can be present to mark the assumed horizontal and vertical location of the utility.

3.3. The Contractor shall restore the disturbed area with flowable fill.

3.4. For a minimally invasive method, the City recommends the use of vacuum extraction for exploratory work.

End of Section

Section 02231

Demolition

1. General

1.1. Section includes requirements for the demolition of

1.1.1. Pavement or Milling of Pavement
1.1.2. Curb, Gutter, and Sidewalk
1.1.3. Buried Pipe and Associated Structure Removal

1.2. Related Sections

1.2.1. Section 02100 - Existing Underground Utilities (Public and Private)
1.2.2. Section 02315 – Fill and Backfill
1.2.3. Section 02370 – Erosion and Sediment Control

1.3. References (latest Edition and Errata) – Not Used

1.4. Quality Assurance – Not Used

1.5. Submittals – Not Used

2. Products – Not Used

3. Execution

3.1. Preparation

3.1.1. Locate and identify all utilities. Care should be taken not to damage utilities during demolition activities. Contractor shall always assume that all utilities are active.

3.2. Activities

3.2.1. Pavement

3.2.1.1.Identify length and location of pavement to be demolished.

3.2.1.2.Excavate and remove pavement.

3.2.1.3.Contractor shall saw cut locations where curb, gutter, sidewalk and pavement are to remain in place.

3.2.1.4.Dispose of excavated pavement in accordance with local laws and regulations. Burying the demolition debris on site will not be allowed.

3.2.1.5.Backfill in accordance with Section 2315 – Fill and Backfill.

3.2.2. Milled Pavement

3.2.2.1.Asphalt pavement section to be milled shall to a minimum depth of 2”.

3.2.2.2.Contractor shall take care not to damage any remaining curb, curb inlets, manhole structures, valve boxes, etc.

3.2.2.3.Milled pavement must have a uniform surface and be free of debris.

3.2.2.4.Pavement overlay shall be properly tacked. See Section 02741.

3.2.2.5.Contractor shall maintain any existing road crowns or super elevations.

3.2.3. Curb, Gutter and Sidewalk

3.2.3.1.Identify length and location of curb, gutter, and sidewalk to be demolished.

3.2.3.2.Excavate and remove curb, gutter and sidewalk.

3.2.3.3.Contractor shall saw cut locations where curb, gutter, sidewalk and pavement are to remain in place.

3.2.3.4.Dispose of excavated concrete material in accordance with local laws and regulations. Burying the demolition debris on site will not be allowed.

3.2.3.5.Backfill in accordance with Section 2315 – Fill and Backfill.

3.2.4. Buried Pipe and Associated Structure Removal

3.2.4.1.Identify length and location of buried pipe to be demolition.

3.2.4.2.Excavate and remove all identified pipe and associated structures as shown on drawings.

3.2.4.3. Abandon underground utilities, which are indicated to remain in place, by filling pipes with flowable fill in accordance with Section 3200 – Flowable Fill as shown on drawings.

3.2.4.4.Dispose of all pipe and structures in accordance with local laws and regulations. Burying the demolition debris on site will not be allowed.

3.2.4.5.Backfill in accordance with Section 2315 – Fill and Backfill.

3.3. Regulatory and Safety Requirements

3.3.1. Contractor shall comply with federal, state, and local hauling and disposal regulations. In addition to other requirements, herein, safety requirements shall conform with ANSI A10.6.

3.4. Dust and Debris Control

3.4.1. Contractor shall prevent the spread of dust and debris on pavements and avoid the creation of a nuisance or hazard in the surrounding area. Do not use water if it results in hazardous or objectionable conditions such as, but not limited to, ice, flooding, or pollution. Sweep pavements as often as necessary to control the spread of dust, mud and debris.

3.5. Protection of Project Site

3.5.1. Traffic Control Signs

3.5.1.1. Where pedestrian and driver safety is endangered in the area of removal work, use traffic barricades with flashing lights.

3.5.2. Existing Work - Protect existing work which is to remain in place, be reused, or remain the property of the Owner. Repair items which are to remain and which are damaged during performance of the work to their original condition, or replace with new. Do not overload pavements to remain.

3.5.3. Trees - Protect existing vegetation to remain.

3.5.4. Facilities - Protect electrical and mechanical services and utilities. Where removal of existing utilities and pavement is specified or indicated, provide approved barricades, temporary covering of exposed areas, and temporary services or connections for electrical and mechanical utilities.

3.5.5. Burning - Burning will not be permitted.

3.5.6. Relocations - Perform the removal and reinstallation of relocated items as indicated with workmen skilled in the trades involved. Repair items to be relocated which are damaged or replace items with new undamaged items as approved by the City of Roanoke.

End of Section

Section 02300

Excavation

1. General

1.1. Section includes the excavating as necessary to establish finish grades or positive drainage as shown on the plans.

1.2. Related Sections

1.2.1. Section 02100 - Existing Underground Utilities (Public and Private)

1.3. References (latest Edition and Errata) – Not Used

1.4. Quality Assurance – Not Used

1.5. Submittals – Not Used

2. Products – Not Used

3. Execution

3.1. Preparation

3.1.1. Locate and identify all utilities. Care should be taken not to damage utilities during trenching activities.

3.1.2. Identify required lines, levels, contours, and datum locations.

3.1.3. Verify that survey bench marks and intended elevations for the Work are as indicated.

3.1.4. Protect bench marks, survey control points, existing structures, fences, sidewalks, paving, and curbs from excavating equipment and vehicular traffic.

3.2. Activities

3.2.1. Strip and stockpile topsoil from areas to be excavated. At a minimum, the first twelve (12) inches shall be stripped.

3.2.2. Contractor shall maintain positive drainage on the site at all times.

3.2.3. Notify project manager of any unexpected subsurface conditions.

3.2.4. Provide a method of dewatering, if necessary.

3.2.5. Do not interfere with 45 degree bearing splay of foundations.

3.2.6. Hand trim excavations. Remove loose matter.

3.2.7. Remove excavated material that is unsuitable for re-use from site.

3.2.8. Cut out soft areas of subgrade not capable of compaction in place. Backfill with Select Material.

3.2.8.1. Compact subgrade to ninety five (95) percent of the material's maximum dry density as determined by ASTM D698, Standard Proctor.

3.2.9. Stockpile and protect excavated material to be re-used.

3.2.9.1. Stockpile shall be protected with silt fence.

3.2.9.2. Contractor shall seal all soil stockpiles to prevent the soil material from becoming saturated during rainfall events. If the material is not properly protected from rainfall events, the Contractor shall bring suitable material to the site and dispose of the saturated material at no cost to the City.

3.2.10. Remove excess excavated material from site.

End of Section

Section 02315

Fill and Backfill

1. General

1.1. Section includes filling, backfilling, and compacting requirements for this Project.

1.2. Related Sections:

1.2.1. Section 02100 - Existing Underground Utilities (Public and Private)
1.2.2. Section 02910 – Topsoil

1.3. References (latest Edition and Errata)

1.3.1. ASTM D698 – Standard Test Methods for Laboratory Compaction Characteristics of Soil Using Standard Effort (12,400 ft-lbs/ft^3), Standard Proctor.
1.3.2. VDOT RBS – Virginia Department of Transportation - Road and Bridge Standards and Specifications

1.4. Quality Assurance – Not Used

1.5. Submittals – Not Used

2. Products

2.1. Select Backfill Material for Trenches

2.1.1. VDOT No. 21-A Aggregate in accordance with VDOT RBS, Section 208.

2.1.2. Top Course/temporary riding surface shall be VDOT BM-25.

3. Execution

3.1. Preparation

3.1.1. Locate and identify all utilities. Care should be taken not to damage utilities during backfilling activities.

3.1.2. Identify required lines, levels, contours, and datum locations.

3.1.3. Verify that survey bench marks and intended elevations for the Work are as indicated.

3.1.4. Protect bench marks, survey control points, existing structures, fences, sidewalks, paving, and curbs from excavating equipment and vehicular traffic.

3.2. Utility Trench Backfilling Activities

3.2.1. Backfill material shall be VDOT No. 21A Aggregate, placed in loose lifts not exceeding 6”, and compacted to at least 95% maximum dry density within 2 percentage points of optimum moisture (VTM-1) with the use of mechanical tampers or vibratory rollers. Do not re-use excavated material.

3.2.1.1. On and as-needed basis as determined by the City, the Contractor and City personnel (City Inspector and City Project Manager) shall establish a compaction roller pattern. All testing shall be performed by the Contractor.

3.2.1.2.Excavator mounted trench compactor wheels shall **not** be allowed for compacting within the pavement area.

3.2.2. Water compaction is not permitted.

3.2.3. Take special care to compact material under haunches of pipe and adjacent to precast concrete structures.

3.2.4. Coordinate compaction efforts on sides of pipes or structure so as not to displace the pipe of structure.

End of Section

Section 02317

Trenching

1. General

1.1. Section includes the trenching requirements for water line, sanitary sewer, and storm drainage utilities.

1.2. Related Sections

1.2.1. Section 02100 - Existing Underground Utilities (Public and Private)

1.3. References (latest Edition and Errata)

1.3.1. OSHA Technical Manual

1.4. Quality Assurance – Not Used

1.5. Submittals – Not Used

2. Products – Not Used

3. Execution

3.1. Preparation

3.1.1. Locate and identify all utilities. Care should be taken not to damage utilities during trenching activities. Hand trenching may be required at no additional cost to the City.

3.1.2. Identify required lines, levels, contours, and datum locations.

3.1.3. Verify that survey bench marks and intended elevations for the Work are as indicated.

3.1.4. Protect bench marks, survey control points, existing structures, fences, sidewalks, paving, and curbs from excavating equipment and vehicular traffic.

3.1.5. Where the utility line is in an existing pavement area, the pavement shall be saw-cut in a straight line parallel to the pipe on each side. Saw cutting operations shall be performed prior to excavation to avoid excessive removal of asphalt. Care shall also be taken during installation of pipe to avoid damage to adjoining paved surfaces.

3.2. Activities

3.2.1. Trench wall shall be supported by shoring or trench boxes to protect workmen and the work. All measures shall meet the requirements of the Occupational Safety and Health Act (OSHA) and OSHA technical manual, chapter 2, titled "Excavations: Hazard Recognition in Trenching and Shoring".

3.2.1.1. Contractor shall be responsible for the design and implementation of any shoring requirements.

3.2.1.2. The contractor may have to temporarily remove or relocate a utility, at no additional cost to the City, in order to place trench boxes or shoring.

3.2.2. Notify project manager of unexpected subsurface conditions.

3.2.3. Provide a method of dewatering, if necessary.

3.2.4. Do not interfere with 45 degree bearing splay of foundations.

3.2.5. Hand trim excavations. Remove loose matter.

3.2.6. No more than 100 feet of trench may be opened at one time.

3.2.7. Cut out soft areas of subgrade not capable of compaction in place. Backfill with VDOT 21A aggregate.

3.2.7.1. Compact subgrade to ninety five (95) percent of the material's maximum dry density as determined by ASTM D698, Standard Proctor.

3.2.8. Remove excavated material that is unsuitable for re-use from site.

3.2.9. The bedding surface shall provide a firm, stable, and uniform support through the entire length of pipe.

3.2.10. Until ready to backfill, maintain excavations and prevent loose soil from falling.

3.2.11. Remove excess excavated material from site. Contractor shall adhere to all applicable laws and ordinances regarding the permitting of waste site, erosion control, zoning, etc. as may be applicable.

3.2.12. Do not allow water to accumulate in excavations. Do not use excavated trenches as temporary drainage ditches. Reroute surface water runoff away from or around excavated areas.

3.2.13. Open Trench Exposure

3.2.13.1. Once a trench is opened, proceed immediately to place specified materials in a trench, or to otherwise utilize trench for intended purpose. Schedule work and order materials so that trenches are not left open for a longer period than is reasonably necessary.

End of Section

Section 02318

Rock Removal

1. General

1.1. Section includes the requirements for removal of rock during excavation. .

1.1.1. Explosive blasting is not allowed for rock removal on this Project. Contractor shall remove rock by combination of mechanical means and rock splitting mortar (non-explosive).

1.2. Related Sections

1.2.1. Section 02315 – Fill and Backfill
1.2.2. Section 02317 – Trenching

1.3. References (latest Edition and Errata) – Not Used

1.4. Quality Assurance – Not Used

1.5. Submittals – Not Used

1.6. Definitions

1.6.1. Rock: Hard rock excavation material for Mass or Trench Rock. In open excavations and mass grading, rock requiring hard rock excavation methods for removal is defined as any material which cannot be dislodged by a Caterpillar D-8N heavy duty track type tractor, rated at not less than 285 hp flywheel power and equipped with a single-shank hydraulic ripper, capable of exerting not less than 45,000 lbs breakout force or equivalent without use of drilling or blasting or hoe-ramming. In confined excavation, such as footing or trench excavation, it is defined as any material which cannot be dislodged by a Caterpillar 215D LC track type hydraulic excavator, equipped with a 24-inch wide short-tip radius rock bucket, rated at not less than 120 hp flywheel power with bucket curling force of not less than 25,000 lbs and stick-crowd force of not less than 18,000 lbs should be used. Boulders or masses of rock exceeding one cubic yard in volume shall also be considered rock excavation. This classification does not include materials such as loose rock, concrete, or other materials that can be removed by means other than drilling and blasting or hoe-ramming, but which for reasons of economy in excavating, the contractor chooses to remove by drilling and blasting or hoe-ramming techniques.

2. Products

2.1. Rock Splitting Mortar – Da-mite, as manufactured by Daigh Company, 2393 Canton Hwy. Ste 400 Cumming, GA 30040, 1-770-886-4711, or approved equal.

3. Execution

3.1. Preparation

3.1.1. Locate and identify all utilities. Care should be taken not to damage utilities during rock removal activities.

3.1.2. Identify required lines, levels, contours, and datum locations.

3.1.3. Prior to starting rock removal work, thoroughly examine the existing property and construction at the site and record, with notes and drawings or other documentation, existing defects and deterioration. Make this information available to the Project Manager upon request.

3.2. Activities

3.2.1. Excavate and remove rock by mechanical methods and rock splitting mortar.

3.2.1.1. Remove excavated materials and dispose of at an off-site location in accordance with all local, state, and federal laws.

3.2.1.2. Stabilize trench in accordance with Sections 02315 – Fill and Backfill and Section 02317 – Trenching.

End of Section

Section 02370

Erosion and Sediment Control

1. General

1.1. Section includes specific City of Roanoke requirements for the erosion and sediment control that supplement the Virginia Erosion and Sediment Control Handbook, latest edition.

1.2. Related Sections

1.2.1. Section 02930 - Seeding

1.3. References (latest Edition and Errata)

1.3.1. Virginia Erosion and Sediment Control Handbook.

1.4. Quality Assurance

1.4.1. Unless specifically noted in this section, all work shall be performed in accordance with the Virginia Erosion and Sediment Control Handbook.

1.5. Submittals – Not Used

2. Products - All products and materials shall be new and in first class condition.

2.1. Unless noted, all products used in erosion and sediment control measures shall meet the requirements of the Virginia Erosion and Sediment Control Handbook, latest edition.

2.2. Specific City of Roanoke Seeding Materials – See Section 02930 Seeding.

3. Execution

3.1. Reference plan drawings for location and type of erosion and sediment control measures used. The measures on the plan represent the minimum standards and may be supplemented by the contractor at no cost to the City as field conditions dictate.

3.2. Unless noted, all preparation and installation of erosion and sediment controls shall be in accordance with the Virginia Erosion and Sediment Control Handbook, latest edition.

3.3. Specific City of Roanoke Seeding Requirements see Section 02930 - Seeding

3.4. Specific City of Roanoke Quality Control / Maintenance Requirements

3.4.1. It shall be the contractor's responsibility to ensure that the public streets adjacent to the construction areas remain free of mud, dirt, dust and/or any type of construction material or litter at all times.

3.4.2. Limit grading to areas of workable size so as to limit the duration of exposure of disturbed and unprotected area. All appropriate conservation practices should be applied in sequence of work. Disturbed areas that are to be left unfinished for more than 14 days shall be seeded temporarily.

3.4.3. Unless natural rainfall occurs, all permanently seeded areas shall be irrigated at 1 ½ inches per week.

3.4.4. Permanently seeded areas shall be inspected for effectiveness of germination and growth. Sparse areas shall be re-seeded. See Section 02930 for requirements.

3.4.5. All erosion and sediment control measures shall be checked daily and after each significant rainfall.

3.4.6. Silt fence shall be checked for undermining and fabric degradation. When accumulated sediment shall be removed from silt fence when sediment depth exceeds six (6) inches.

3.4.7. Side slopes of stockpiles shall not exceed 2 to 1.

3.4.8. No more than 200 feet of trench may be opened at one time.

3.4.9. No excavated material shall be placed in stream beds.

3.4.10. Erosion and sediment controls shall be removed after final stabilization. The City of Roanoke will notify contractor when final stabilization criteria have been satisfied.

End of Section

Section 02636

Storm Drainage Piping and Structures

1. General

1.1. Section includes the requirements for the proper installation of:

1.1.1. Storm Drain Piping (Pipes)
1.1.2. Structures (Manholes, Drop Inlets, Curb Inlets, End walls, etc.)

1.2. Related Sections

1.2.1. Section 02100 - Existing Underground Utilities (Public and Private)
1.2.2. Section 02315 - Fill and Backfill
1.2.3. Section 02317 - Trenching

1.3. References (latest Edition and Errata)

1.3.1. ASTM C76 / AASHTO M170 – Reinforced Concrete Culvert, Storm Drain and Sewer Pipe.
1.3.2. ASTM C443 / AASHTO M198 – Joints for Circular Concrete Sewer and Culvert Pipe, Using Rubber Gaskets.
1.3.3. ASTM F2736 - Standard Specification for 6 to 30 in. Polypropylene (PP) Corrugated Single Wall Pipe and Double Wall Pipe.
1.3.4. ASTM F2764 - Standard Specification for 30 to 60 in. Polypropylene (PP) Triple Wall Pipe and Fittings for Non-Pressure Sanitary Sewer Applications.
1.3.5. ASTM D3212 - Standard Specification for Joints for Drain and Sewer Plastic Pipes Using Flexible Elastomeric Seals
1.3.6. VDOT RBS – Virginia Department of Transportation - Road and Bridge Standards and Specifications, latest edition.

1.4. Quality Assurance

1.4.1. For concrete pipe and structures, all work shall be performed in accordance with the VDOT RBS except as noted in this Specification or Project Manual. However, the Contractor shall note that the City requires that the bell/spigot connection be 100% complete with no missing sections. This requirement takes precedence over the VDOT RBS, any ASTM specifications, or any concrete trade association literature, etc.

1.5. Submittals

1.5.1. VDOT Precast Certification / Poly propylene Product Data (See submittal log).

2. Products - All products and materials shall be new and in first class condition.

2.1. Reinforced Concrete Pipe (RCP) and Joint Materials

2.1.1. Concrete Pipe: Reinforced, ASTM C76, Class III, wall thickness B, as a minimum unless shown otherwise on drawings. Joint Material per ASTM C76: Bell and spigot joint connections. Mastic joint compound, pre-formed mastic or butyl joint sealer. Note that tongue and groove joint connections shall not be allowed.

2.1.2. Mortar for concrete pipe to concrete structure connections shall conform to ASTM C270, Type M, except that the maximum placement time shall be 1 hour. The quantity of water in the mixture shall be sufficient to produce a stiff workable mortar but in no case shall exceed 6 gallons of water per sack of cement. Water shall be clean and free of harmful acids, alkalies, and organic impurities. The mortar shall be used within 30 minutes after the ingredients are mixed with water. The inside joint shall be wiped clean and finished smooth. The mortar head on the outside shall be protected from air and sun with proper covering until satisfactorily cured.

2.1.3. Grout shall not be used in lieu of mortar. Grout is a filler product, is intended to flow, has high water content, more susceptible to shrinkage cracks, and does not bond to concrete as well as mortar.

2.2. Polypropylene Pipe (PP) and Joint Materials

2.2.1. Polypropylene pipe, ASTM F2736 / ASTM F2881. Joint shall be integral bell & spigot meeting the requirements of ASTM F2736 / ASTM F2881.

Minimum Stiffness / Cover Requirements

Nominal Diameter	Minimum Pipe Stiffness at 5% (#/in./in.)	Minimum Cover Height During Construction
12”	75	18”
15”	60	18”
18”	56	18”
24”	50	18”
30”	46	18”
36”	46	18”
42”	46	21”
48”	46	24”
60”	46	30”

2.2.2. Contractor shall make the pipe connection to the manhole using Pre-cast Compression Gasket Connection, Flexible Boot Connection, Grouted Waterstop Manhole Connection, Pre-cast Compression Gasket Connection, or approved equal.

2.3. Structure Materials

2.3.1. Precast Concrete Structures in accordance with VDOT RBS.

2.3.1.1. The contractor has the option to cast-in-place any structures in accordance with the VDOT Road and Bridge Standards and Specifications.

2.3.1.2. All structures shall include VDOT ST-1 steps.

2.4. Frames, Covers and Grates

2.4.1. Curb Inlet Frame and Covers: Frames and covers for curb inlet shall comply with VDOT RBS. Covers shall be cast without the "VDOT" lettering.

2.4.2. Grates shall comply with VDOT RBS except specified on plan drawings.

2.4.3. Manhole Frames and Covers

2.4.3.1. Covers shall be cast with "Storm Drain" lettering and two ¾" diameter "pick" holes.

2.4.3.2. Frames and covers shall have machined bearing surfaces which fit flush without rocking.

2.5. Bedding material for pipe and structures shall meet the requirements of VDOT No. 57 aggregate.

3. Execution

3.1. Material Stockpiles

3.1.1. The Contractor shall not stockpile excavation soils associated with this Project. All excavation soils shall be directly loaded into a truck and sent for proper disposal.

3.2. Pipe Preparation

3.2.1. Verify that trench subgrade is at the proper grade and ready to receive bedding material. For pipes equal or less than 24" in diameter, place and lightly compact four (4) inches of bedding material. For pipes greater than 24" in diameter or for box culverts, place and lightly compact eight (8) inches of bedding material.

3.2.1.1. If pipe is located in rock conditions, the bedding depth shall be a minimum of six (6) inches.

3.2.2. Place and shape additional bedding material to embed the concrete pipe a minimum depth of one-half of the pipe diameter. For polypropylene pipe installation, extend bedding material to above top of pipe to a minimum of 12”.

3.2.3. Should over excavation occur, the trench shall be refilled and thoroughly compacted with bedding material to establish a smooth surface.

3.2.4. Excavation material spoils shall be properly disposed of off-site in accordance with local, state and federal laws. Re-spreading/re-grading of excavation spoils on site shall not be permitted.

3.2.5. Should the bottom material be deemed an unacceptable foundation by the project manager, the contractor shall excavate and dispose of the material and replace with compacted bedding material.

3.2.6. Unless indicated otherwise on the drawings, all pipes, including culverts, shall have a minimum of three (3) feet of cover.

3.2.7. The contractor shall be responsible for core drilling existing structures for new pipe connections.

3.2.7.1. The contractor shall take care to ensure debris does not enter into existing manhole.

3.2.8. Contractor shall use manufacturer’s installation recommendations for installing the pipe. The Contractor shall be warned that bell-spigot confined o-ring gasket pipe requires a special installation technique to avoid cracking the bell–spigot connections. Cracks in the bell-spigot connections shall be rejected by the City.

3.3. Pipe Construction

3.3.1. Verify that the bedding material is at proper grade and the trench is ready for the placement of pipe.

3.3.2. Inspect pipe to verify that the interior is free of dirt and debris.

3.3.3. Inspect pipe to verify that it is new and in good condition.

3.3.4. Apply joint material to pipe, fitting or accessory.

3.3.5. Join pipe sections using joint material to create leak resistant joint.

3.3.6. When connecting the concrete pipe to a concrete structure, the Contractor shall thoroughly wet, with clean water, the adjoining concrete material

before applying the mortar. This will help achieve the bond at the joint and also prevent shrinkage cracking in the mortar. The City shall reject connections that are not bonded or connections that have shrinkage cracking.

3.3.7. Verify that the pipe is properly installed at the correct elevation, grade and alignment.

3.3.8. Backfill shall begin without delay after installation of the pipe.

3.3.9. Vibratory motors shall not be activated until at least two (2) feet of backfill has been placed and compacted over the pipe. Backfill and compaction shall be advanced simultaneously on both sides of the pipe.

3.3.10. All pipes shall be installed in an upstream direction.

3.4. Pipe Backfill

3.4.1. See Section 02315 – Fill and Backfill

3.5. Structure Preparation

3.5.1. Verify that structure subgrade is at the proper grade and ready to receive bedding material. Place and lightly compact six (6) inches of bedding material.

3.5.2. Place and shape additional bedding material to embed the structure an additional twelve (12) inches above the original bottom six (6) inches of bedding material.

3.6. Structure Construction

3.6.1. Verify that the bedding material is at the proper grade and the trench is ready for placement of structure.

3.6.2. Inspect the structure is new and in good condition.

3.6.3. Set the structure plumb, carefully matching structure openings to pipe alignments.

3.6.4. Steps within manhole structures shall be aligned.

3.6.5. Make pipe connections to the structure in accordance with VDOT RBS or in accordance in manufacturer's installation requirements, whichever is more stringent.

3.6.6. Install invert shaping before setting last piece of structure/top of structure.

3.6.7. Slope frame and covers to conform with the pavement cross-slope. Mortar the space between the structure and frame. Concrete shims or concrete bricks shall be used to slope the cover. The use of wood, clay bricks or any other material shall not be allowed.

3.6.8. Drop inlet grates shall be placed so that the designated sump dimension, indicated on the plans is achieved.

3.6.9. Manhole covers should be flush with the pavement or existing ground as to not create traffic or mowing hazards.

3.7. Contractor shall mortar all lifting lug locations.

3.8. Retrofitting Curb Inlet and Drop Inlet Tops to Existing Riser Sections or Existing Manholes

3.8.1. The City of Roanoke Right of Way drainage system is comprised of a variety of non-standard brick, precast and cast-in-place drainage structures and riser sizes. When retrofitting a standard curb inlet top or standard drop inlet top onto a non-standard riser or manhole, the contractor shall provide a cast-in-place concrete collar to make the connection. The concrete collar shall be Class A3 conforming to VDOT Road and Bridge Standards, Section 217.

3.9. Trench Backfill Requirements

3.9.1. See Section 02315 Fill and Backfill

3.10. Quality Control

3.10.1. Lay pipe to line and grade.

3.10.2. Standing water in pipe or structure shall be grounds for rejection.

3.10.3. Maximum pipe or structure variation from plan invert shall be 0.1 foot.

3.10.4. Top of structures located in the pavement shall be set within 0.02 feet of pavement cross section.

3.10.5. No pipe shall be constructed in water and water shall not be allowed to drain through the pipe. The open end of the pipe shall be kept closed with a tight fitting plug to prevent washing of any foreign matter into the line.

3.10.6. All pipe openings into a drainage structure shall be cored or formed. Under no circumstances shall the Contractor use any type of impact equipment (i.e. jackhammer) to create an opening into the drainage structure.

3.10.7. Once completed, the City of Roanoke Planning and Stormwater Department will conduct a storm drain acceptance review. Part of that process includes the Stormwater Division televising the installed pipe for defective workmanship and substandard joint conditions using a robotic pipe camera. Any defective work discovered during this process shall be corrected by removing the pipe and installing a new section.

End of Section

Section 02741

Asphalt Paving

1. General

1.1. Section includes the requirements for the proper installation of:

1.1.1. Asphalt Base Mix (BM)
1.1.2. Pavement Overlays with Tack Coat

1.2. Related Sections Not Used

1.3. References (latest Edition and Errata)

1.3.1. VDOT RBS – Virginia Department of Transportation - Road and Bridge Standards and Specifications.
1.3.2. City of Roanoke Right of Way Excavation Standards, latest edition.

1.4. Quality Assurance - All work shall be performed in accordance with the VDOT RBS.

1.5. Submittals

1.5.1. Asphalt Mix Designs
1.5.2. Liquid Asphalt Source

2. Products - All products and materials shall be new and in first class condition.

2.1. Materials

2.1.1. All materials shall conform to the requirements of the VDOT RBS.

2.1.2. Tack – CRS-1

2.1.3. Asphalt base mix shall be VDOT BM-25.

2.1.4. Asphalt surface mix shall be VDOT SM-9.5D. This mix should contain fine and coarse aggregate which does not tend to polish under traffic.

3. Execution – Pavement Overlays with Tack Coat

3.1. Preparation

3.1.1. Verify that milled pavement section is uniform and 1 1/2” deep.

3.1.2. Milled pavement must have a uniform surface and be free of debris.

3.1.3. Edges of milled pavement section or curb shall be properly tacked in accordance with 3.2.1.

3.2. Construction

3.2.1. Milled surface shall be tacked with approximately 0.05 to 0.1 gal/s.y. of **undiluted** CRS-1 asphalt. If *diluted* tack is used then the application rate must be prorated. Tack material shall be uniformly applied with a pressure distributor conforming to the requirements of VDOT RBS, Section 314.01B.

3.2.2. Contractor shall maintain any existing road crowns or superelevation.

3.2.3. Place and compact surface mix asphalt in accordance with VDOT RBS, Section 315.

3.3. Quality Control

3.3.1. Flatness: Maximum variation of ¼ inch measured with 10 foot straight edge

3.3.2. Compact Thickness: Within ¼ inch of specified or indicated thickness

3.3.3. Variation from True Elevation: Within ½ inch.

End of Section

Section 02750

Shoulder Restoration for Curb and Gutter

1. General

1.1. Section includes the requirements for the proper shoulder restoration for curb and gutter. *The shoulder restoration applies to any disturbed area behind the back of curb.*

1.2. Related Sections

1.2.1. Section 02100 - Existing Underground Utilities (Public and Private)
1.2.2. Section 02910 - Topsoil
1.2.3. Section 02930 – Seeding

1.3. References (latest Edition and Errata)

1.3.1. ASTM D698 – Standard Test Methods for Laboratory Compaction Characteristics of Soil Using Standard Effort (12,400 ft-lbs/ft^3), Standard Proctor.
1.3.2. VDOT RBS – Virginia Department of Transportation - Road and Bridge Standards and Specifications.

1.4. Quality Assurance – Not Used

1.5. Submittals – Not Used

2. Products

2.1. Backfill Subsurface material

2.1.1. ASTM D2487. Classification GW, GP, GM, GC, SW, SP, SM, SC, CL, CH and MH.

2.1.2. Soil material free of debris, roots, wood, scrap metal, vegetation, refuse, soft unsound particles, and frozen deleterious or objectionable materials. The maximum particle diameter shall be ½ the lift thickness.

2.1.3. VDOT No. 21-A Aggregate in accordance with VDOT RBS, Section 208

2.2. Topsoil – See Section 02910 Topsoil

2.3. Seeding Specification – See Section 02930 Seeding

2.4. Mulch – Oat, rye or wheat straw, free of seed. ***Contractor shall not use hay.***

2.5. Water for irrigation - Shall be clean, fresh, and free from harmful substances.

3. Execution

3.1. Shoulder Restoration

3.1.1. Backfilling – Place General fill in eight (8) inch loose layers and compact to at least ninety-five (95) percent of the material's maximum dry density as determined by ASTM D698, Standard Proctor. Contractor shall **not** backfill with concrete debris.

3.1.2. Fine Grading – See Section 02910 –Topsoil.

3.1.3. Seeding – See Section 02950 - Seeding.

3.1.4. Mulching – Contractor shall apply continuous straw bale coverage at 2 bales per 1,000 square feet. Immediately water straw after application.

3.1.5. Watering – As required to achieve a good, healthy, growing state.

3.2. Driveway Connections

3.2.1. Contractor shall properly construct entrances to provide smooth transitions to existing driveways. Restoration material for driveways shall match existing material conditions. Saw cut edges of existing pavement or curb.

3.3. Quality Control - Contractor shall provide a finished lawn. All grass shall appear in a good, healthy, growing state.

End of Section

Section 02910

Topsoil

1. General

1.1. Section includes the requirements for the proper installation of topsoil on a previously prepared subgrade.

1.2. Related Sections – Section 02750 – Shoulder Restoration

1.3. References (latest Edition and Errata) – Not Used

1.4. Quality Assurance – Not Used

1.5. Submittals

1.5.1. Submit soil analysis report for imported topsoil from the Virginia Tech Agricultural Service or other approved testing laboratory. Report shall cover soil textural classification (percentages of sand, silt, and clay) and include additive recommendations. Testing will be at the expense of the Contractor. Contractor shall provide testing agency with a description of seeding or planting materials.

2. Products

2.1. Imported Topsoil

2.1.1. Topsoil shall be fertile, friable, loamy soil, free from subsoil, refuse, roots, heavy or stiff clay, stones larger than 1 inch, coarse sand, noxious seeds, sticks, brush, litter and other deleterious substances; suitable for the germination of seeds and support of vegetative growth. The pH value shall be between 5.5 to 8.0 with a minimum of 3% organic material

2.1.2. Soil Texture shall be Sand (20 to 70 percent), Silt (10 to 60 percent), and Clay (5 to 30 percent).

2.1.3. Additives: As determined by soil fertility tests (See Submittals 1.5.1).

2.1.4. Contractor shall <u>not</u> mix two or more imported soil(s) or composted material(s) on site to achieve the nutrient requirements. Any imported topsoil shall have appropriate nutrient values when delivered to the site and without the need for on-site mixing.

2.1.5. Under <u>no</u> circumstances shall the Contractor use a manure based soil mixture.

2.2. Reuse of Existing On-Site Topsoil - If the Contractor wishes to reuse existing on-site topsoil, a soil analysis report, as outlined in 1.5.1, shall be submitted to the City project manager for review. The criteria outlined in 2.1 shall be enforced for the existing material. If the topsoil does not satisfy the criteria in 2.1 then imported topsoil shall be required. All existing topsoil, targeted for reuse, shall be properly stockpiled in an orderly manner. Noted existing topsoil targeted for reuse shall be free from subsoil, refuse, roots, heavy or stiff clay, stones larger than 1 inch, coarse sand, noxious seeds, sticks, brush, litter and other deleterious substances; suitable for the germination of seeds and support of vegetative growth.

2.2.1. On-site mixing of existing topsoil with other soil(s) or composted material(s) to achieve required nutrient values shall not be allowed.

3. Execution

3.1. For final grade - Scarify compacted subgrade to a 2-inch depth to bond topsoil to subsoil. Place topsoil to a minimum thickness of 4 inches and roll lightly. Spread evenly and grade to elevations and slopes shown or provide positive drainage if no grades are shown on the plans. Hand rake areas inaccessible to machine grading.

3.1.1. The Contractor is encouraged to stabilize the topsoil areas as soon as possible with seed. Light rainfalls can easily wash away topsoil which was not properly stabilized thus exposing the subgrade material. The Contractor shall be responsible for replacing any topsoil that is washed away.

End of Section

Section 02930

Seeding

1. General

1.1. Section includes the requirements for the proper installation of seeding for establishing proper stand of grass.

1.2. Related Sections

1.2.1. Section 02370 – Erosion and Sediment Control
1.2.2. Section 02910 - Topsoil

1.3. References – Not Used

2. Products

2.1. Temporary Seeding Materials (Season Dependent)

2.1.1. Between May 2nd and August 31st, temporary seeding shall be **German Foxtail Millet**, applied at a rate of 30 lbs/acre.

2.1.2. Between November 1st and February 28th temporary seeding shall consist of **Annual Rye** applied at a rate of 120 lbs/acre. Under no circumstances shall the Contractor use cereal rye.

2.2. Permanent Seeding Materials

2.2.1. Unless noted otherwise, all shoulder restoration shall be done with Tall Turf Fescue Mix (i.e. Southern Lawn).

2.2.2. **Tall Turf Fescue Mix (i.e. Southern Lawn)**: Consists of a 50/50 blend of Wyatt and Dynasty Tall Fescues. Use Blue-Tag certified seed with a delivery date not greater than 30-days old from site of origin. Apply at a rate of 20 lbs per 1,000 SF. .

3. Execution

3.1. Preparation

3.1.1. The Contractor shall achieve final grade and place topsoil in accordance with Section 02910 - Topsoil.

3.1.2. Seasonal Application Table

Seeding Type	Application Season
Temporary	November 2nd to February 28th
Permanent	March 1st to May 1st
Temporary	May 2nd to August 31st
Permanent	September 1st to November 1st

** Or as otherwise approved.

3.1.3. Application of Soil Amendments

3.1.3.1. Temporary seeding areas shall be fertilized with an organic based fertilizer (14-2-6) at a rate of 1 ½ lbs of nitrogen per 1000 square feet, and mulched with continuous straw bale coverage at a rate of 80 bales/acre. Fertilizer shall be incorporated into the soil to a maximum 4 inch depth or may be incorporated as part of the tillage operations

3.1.3.2. Permanent seeding areas shall be mulched with lime at a rate of 2000 lbs/acre. Lime shall be thoroughly incorporate by tillage into the soil to a maximum 4 inch depth.

3.1.4. Installation of Seeding

3.1.4.1. Temporary seeding may be broadcast.

3.1.4.2. Permanent seeding shall be hydro-seeded with an organic based fertilizer, such as Harmony 14-3-6, at a rate of 1.5 lbs of nitrogen per 1000 sf. The second shot will be for hydromulch only applied at 750 lbs/acres.

3.1.5. Maintenance of Seeding

3.1.5.1. Post-Fertilization – Nitrogen carrier fertilizer shall be applied to seeded areas of Fine Fescue and Tall Fescue Mix at the rate of 14 pounds per square yards after the first month and again prior to final acceptance. The application shall be timed prior to the advent of winter dormancy and shall avoid excessively high nitrogen levels and shall be made without burning the installed grass plants.

3.1.6. The Contractor shall be required to achieve seed establishment in accordance with this Section. Seed establishment is the sole responsibility of the Contractor.

End of Section

Section 03100

Incidental Concrete

1. General

1.1. Section includes the requirements for proper installation of

1.1.1. Curb and gutter

1.2. Related Sections

1.2.1. Section 02750 -Shoulder Restoration for Curb and Gutter

1.3. References (latest Edition and Errata)

1.3.1. ACI 304R -Guide for Measuring, Mixing, Transporting, and Placing Concrete; American Concrete Institute International.
1.3.2. ACI 308 -Standard Practice for Curing Concrete; American Concrete Institute International.
1.3.3. ASTM A 185 -Standard Specification for Steel Welded Wire Reinforcement, Plain, for Concrete.
1.3.4. ASTM D698 – Standard Test Methods for Laboratory Compaction Characteristics of Soil Using Standard Effort (12,400 ft-lbs/ft^3), Standard Proctor.
1.3.5. VDOT RBS – Virginia Department of Transportation - Road and Bridge Standards and Specifications.

1.4. Quality Assurance

1.4.1. Specified concrete strengths shall be obtained at the 28-day break. Averaging, as defined by ACI or ASTM methodologies, of compression break results shall not be permitted. The City reserves the right to test any portion of the concrete work.
1.4.2. Any concrete represented by a test which indicates a strength which is less than the specified 28-day compressive strength will be rejected and shall be removed and replaced with acceptable concrete at no expense to the City. Such rejection shall prevail unless the Contractor, at his expense, obtains and submits evidence acceptable to the City Engineer that the strength and quality of the reject is acceptable. If such evidence consists of cores taken from the work, the cores shall be obtained and tested in accordance with the standard methods of ASTM C42.

1.5. Submittals

1.5.1. Concrete mix design

2. Products

2.1. Concrete

2.1.1. For curbs, gutters, and sidewalks: Concrete shall be Class A3 (3,000 psi) General conforming to VDOT RBS, Section 217.

2.2. Concrete Accessories

2.2.1. Curing Compound: Curing Compound shall be 1100-CLEAR series conforming to ASTM C 309, Type 1, Classes A & B.

2.3. Joint Material

2.3.1. Isolation Joint Filler: Joint filler conforming to ASTM D 1751.

2.3.2. Expansion Joint Filler:

2.3.2.1.Preformed asphalt joint filler conforming to AASHTO M213.
2.3.2.2.Sponge rubber joint filler conforming to AASHTO M153, Type I.
2.3.2.3.Or approve equal.

2.4. Bedding - VDOT No. 21A Aggregate in accordance with VDOT RBS, Section 208.

2.4.1. Contractor shall <u>not</u> substitute VDOT No. 25 and 26 aggregate in lieu of VDOT 21A.

3. Execution

3.1. Preparation

3.1.1. Sawcut edges of existing pavement or curb.

3.1.2. If curb and gutter is being added to existing pavement, sawcut pavement 12" from the proposed edge of curb and gutter. The 12" gap shall allow space for proper installation of concrete and re-compaction.

3.1.3. Verify that compacted subgrade is dry and ready to support concrete placement.

3.1.4. Verify lines, levels, and dimensions before proceeding with work of this section.

3.2. Placing Concrete – Mixed concrete shall be discharged within 1 and 1/2 hours or before the mixer drum has revolved 300 revolutions, whichever comes first after the introduction of the mixing water to the cement and aggregates. When the concrete temperature exceeds 85 degrees F, the time shall be reduced to 45 minutes. Concrete

shall be placed within 15 minutes after it has been discharged from the transporting unit. Concrete shall be handled from the mixer or transporting unit to forms in a continuous manner until the approved unit of operation is completed. Placing shall not be permitted when the sun, heat, wind, or limitations of facilities furnished by the Contractor prevent proper consolidation, finishing and curing. Sufficient placing capacity shall be provided so that concrete can be kept free of cold joints.

3.3. Depositing Concrete – Concrete shall be deposited as close as possible to its final position in the forms, and there shall be no vertical drop greater than 5 feet except where suitable equipment, as approved by the City project manager, is provided to prevent segregation.

3.4. Construction

3.4.1. Construct curb and gutter, entrances, sidewalk, and handicap ramps where shown on plans and in accordance with City of Roanoke specifications and plan details.

3.4.2. Construct and compact a 4" aggregate base of VDOT 21A under all concrete work associated with this Section. Remove soft or yielding areas and backfill with VDOT 21A aggregate. All aggregate base shall be compacted to at least ninety-five (95) percent of the material's maximum dry density as determined by ASTM D698, Standard Proctor.

3.4.3. Install forms in straight lines or smooth curves as shown on the plans.

3.5. Curb and Gutter

3.5.1. Concrete curb and gutter shall be formed in accordance with Section 502 of the VDOT RBS on the grades indicated on the Plans.

3.5.2. Forms for curb and gutter shall be steel and in good condition.

3.5.3. Joints for Curb and Gutter

3.5.3.1. Construct contraction joints (1/2" deep by 1/8" wide) for crack control at approximate five (5) foot intervals.

3.5.3.2. Construct expansion joints at approximate 50 foot intervals, points of curvature, all radii points at concrete entrances and curb returns and at any drainage structure (i.e. curb inlets or drop inlets), and any other above grade utility structure. Expansion joints shall extend through the concrete with the void filled with one half (1/2) inch joint filler. Welded wire fabric shall not be constructed through an expansion joint.

3.5.3.3. Construct expansion joints where new concrete work is constructed next to existing concrete work, “cold joints”, or when time elapsing consecutive concrete placement exceeds 60 minutes.

3.5.3.4. Trim joint filler at expansion joints to provide room for sealant. Apply sealant to expansion joints per manufacturer’s recommendations.

3.5.4. Curb and gutter shall not require steel reinforcement.

3.5.5. When replacing or connecting to the **old** City of Roanoke Standard 7” curb, the Contractor shall transition from the new curb height of 6” to the 7” curb over a span of 10’. However, if the length of the new curb is less than 100’, the Contractor shall match the existing 7” curb for the entire construction.

3.5.6. When the new curb does not connect to an existing curb, the Contractor shall taper the curb height above pavement down to 0” over a span of two feet.

3.6. Placing Concrete

3.6.1. Place concrete in accordance with ACI 304R.

3.6.2. Install joint devices in accordance with manufacturer's instructions.

3.6.3. Place concrete continuously between predetermined expansion, control, and construction joints. No concrete shall be poured when the outside temperature is 40 degrees and falling.

3.6.4. Cold weather curing shall be utilized when the temperature, as placed and maintained, is 55 degrees to 40 degrees. No additional compensation shall be made for cold weather curing. The protection period for cold weather curing is 72 hours. See attached ACI Table for more detail.

ACI Table

	Section Size, Minimum Dimension			
Minimum Concrete	< 12 inches	12-36 inches	36-72 inches	> 72 inches
Temperature as Placed and Maintained	55°F	50°F	45°F	40°F

3.6.4.1. Routine cold weather curing shall include heating blankets. Calcium chloride admixture, conforming to AASHTO designation M144, type 2, shall not be used in any concrete reinforced with bars or welded wire fabric.

3.6.4.2. In addition, Contractor’s may use, at the Contractor’s expense, lower water/cementitious material ratios (additional cement), a non-chloride accelerating admixture, or a Type III cement (high-early) to reduce the protection period. Protection period reductions shall be agreed upon by the

City Project Manager. The use of fly ash in cold weather concrete placement is prohibited.

3.6.5. Hot weather curing shall be utilized when the temperature, as placed or maintained, is 80 degrees or above. No additional compensation shall be made for hot weather curing. The protection period for hot weather curing is 72 hours.

3.6.5.1. Routine hot weather curing measures shall include cooling forms/tarps and wetting subgrade in addition to other measures.

3.6.6. Concrete shall be placed in the forms in such a manner as to prevent the segregation of the mortar and the aggregate. The concrete shall be spaded, tamped, or vibrated sufficiently to bring the mortar to the surface. Concrete shall not be dropped a distance of more than 5 feet.

3.7. Concrete Finishing

3.7.1. Concrete surfaces shall be worked and dressed with a consistent "broom" finish.

3.7.2. Edges shall be tooled to produce a rounded edge with approximate one eighth (1/8) inch radius.

3.7.3. The Contractor shall apply a “light broom finish” perpendicular to the street for all sidewalks.

3.7.4. The Contractor shall apply a “light broom finish” parallel to the flow line for all curbs, gutters, and channels.

3.7.5. The Contractor shall apply a “coarse broom finish” parallel to the street for all entrances.

3.8. Curing and Protection

3.8.1. Comply with requirements of ACI 308. Immediately after placement, protect concrete from premature drying, excessively hot or cold temperatures, and mechanical injury.

3.8.2. Curing compound shall be applied at the rate of one (1) gallon per one hundred fifty (150) square feet to concrete surfaces for curing.

3.9. Field Quality Control

3.9.1. All exposed concrete shall be air entrained with air content conforming to the requirements of Table II-17, Section 217 of the VDOT RBS.

3.9.2. Concrete slump shall be between 1 and 5 inches.

3.9.3. Surfaces of concrete shall be true to line and grade. Surfaces shall not vary more than one quarter (1/4) inch per foot in five (5) feet, except where otherwise indicated.

3.9.4. All expansion joints shall be sealed.

3.9.5. Gutter pans shall have 2” drop to the front of the curb in accordance with VDOT standards. Drops less than 2” or flat gutter pans shall not be accepted.

3.9.6. The existing pavement shall not be used as a front form for curb and gutter construction.

3.10. Protection of Concrete

3.10.1. Protect new concrete sidewalks from pedestrian traffic for a minimum of 24 hours. Erect and maintain warning signs and lights to protect and direct pedestrian traffic.

3.10.2. Protect curb and gutter from vehicular traffic for a minimum of 7 days. Erect and maintain warning signs and lights to direct traffic as needed.

3.10.3. Protect entrances for a minimum of 7 days due to high early strength. Erect and maintain warning signs and lights to direct traffic as needed.

3.11. Defective Concrete

3.11.1. Any defective concrete shall be removed and replaced at the contractor’s expense.

End of Section

Section 03200

Flowable Fill

1. General

1.1. Section includes the requirements for proper installation of flowable fill.

1.1.1. Flowable fill is a cementitious slurry consisting of a mixture of fine aggregate, water, and cementitious material(s). The slurry can be used as fill or backfill in lieu of compacted earth. In addition, the slurry can be used to fill abandoned pipelines where noted on the plan drawings.

1.2. Related Sections-Not Used

1.3. References (latest Edition and Errata)

1.3.1. ASTM D4832-02 – Standard Test Method for Preparation and Testing of Controlled Low Strength Material (CLSM) Test Cylinders.
1.3.2. ASTM C618-03 – Standard Specifications for Coal Fly Ash and Raw or Calcined Natural Pozzolan for use as Mineral Mixture in Concrete.
1.3.3. ASTM C403/C403M-05 – Standard Test Method for Time of Setting of Concrete Mixtures by Penetration Resistance.
1.3.4. ASTM C150-99 Rev A-04 – Standard Specification for Portland Cement.
1.3.5. ASTM C33-03 – Standard Specification for Concrete Aggregates.
1.3.6. ASTM C494/C494M-04 – Standard Specification for Chemical Admixtures for Concrete.
1.3.7. ASTM RevA=98 – Standard Specification for Expansion and Bleeding of Freshly Mixed Grouts for Preplaced – Aggregate in the Laboratory.
1.3.8. ACI SP-150-94 – Controlled Low-Strength Materials

1.4. Quality Assurance

1.4.1. Provide documentation that the admixture supplier has experience of at least one year with the product being provided and any equipment required to obtain desired performance of product.

1.5. Submittals

1.5.1. Flowable fill mix design

2. Products

2.1. Flowable Fill

2.1.1. Portland Cement: ASTM C150

2.1.2. Mixing Water: Fresh, clean, potable
2.1.3. Air Entraining Mixture: ASTM C260
2.1.4. Chemical Admixtures: ASTM C494
2.1.5. Aggregate: ASTM C33
2.1.6. At the contractor's option, the mix may also include fly ash, aggregate, or chemical admixtures in any proportions such that the final product meets the strength, flow consistency, and shrinkage requirements of 3.3.

3. Execution

3.1. Preparation

3.1.1. Examine conditions of substrate and other conditions under which work is to be performed and notify Project Manager, in writing, of circumstances detrimental to the proper completion of the work.

3.1.2. Secure tanks, pipes and other members to be encased in flowable fill.

3.1.3. Insure that there are no exposed metallic pipes, conduits, or other items that will be in contact with the flowable fill after placement. If so, replace with non-metallic materials or apply manufacturers recommended coating to protect metallic objects before placing flowable fill.

3.1.4. Deliver and handle all products and equipment, in strict compliance with manufacturer's recommendations. Protect from damage due to weather, excessive temperatures, and construction operations.

3.2. Construction

3.2.1. Install flowable fill in areas as shown on plans.

3.3. Field Quality Control

3.3.1. Flowable fill mix design shall produce a consistency that will result in a flowable product at the time of placement which does not require manual means to move it in place.

3.3.2. Flowable fill shall have a compressive strength in the range of 30 to 200 psi at 28 days of placement.

3.3.3. Flowable fill shall have a unit weight of 115 to 145 lbs/ft^3.

3.3.4. Flowable fill shall have a minimal subsidence and bleed water shrinkage. Evaporation of bleed water shall not result in shrinkage or more than 1/8" per foot of flowable fill depth. Measurement of a Final Bleeding shall be as measured in Section 10 of ASTM C940.

3.4. Protection of Flowable Fill

3.4.1. Protect exposed surfaces of flowable fill from premature dying.

End of Section

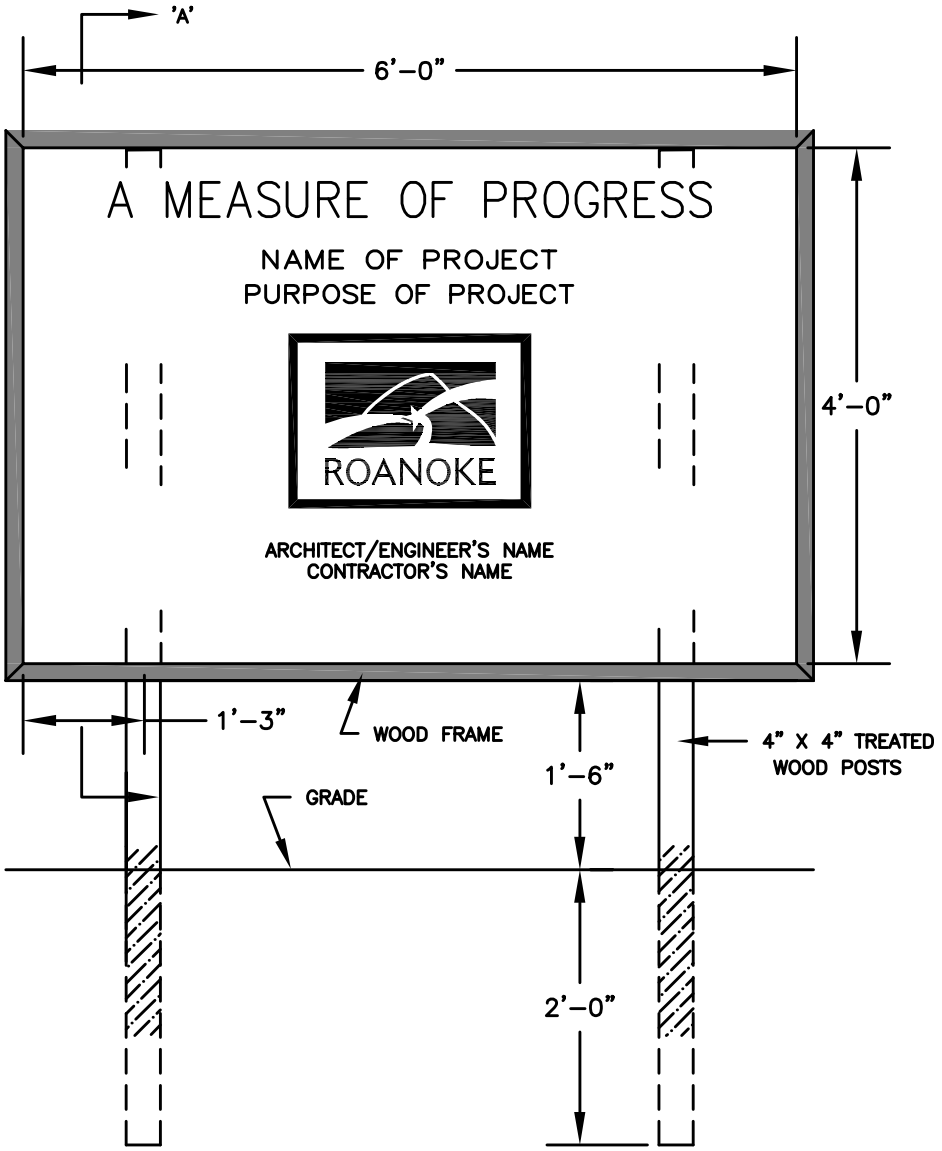

ELEVATION

NOT TO SCALE

GENERAL NOTES:

- BACKGROUND PAINTED WHITE.
- FRAME, "ROANOKE" AND LOGO PAINTED PMS 7469U
- ALL LETTERING PAINTED PMS 7545U
- "OPTIMA" STYLE LETTERS

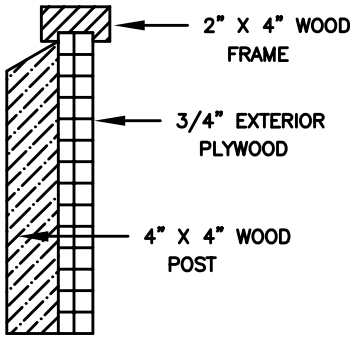

SECTION 'A'

NOT TO SCALE

OFFICE OF THE CITY ENGINEER	ROANOKE, VIRGINIA	
APPENDIX A	PROJECT SIGN	DETAIL P S

City of Roanoke - Transmittal of Shop Drawings, Equipment Data, Material Samples, Or Manufacturer's Certificates of Compliance (Appendix B)

Section I - Request for Approval of the Following Items

To: City of Roanoke Engineering Department 215 Church Avenue, SW - Rm 350 Roanoke, VA 24011	From:
Contract:	Check One: ☐ New Submittal ☐ Revised Submittal
Date:	

Submittal Number	Description	No. of Copies

Remarks:	

I certify that the above submitted items have been reviewed in detail and are correct and in the strict conformance with the contract drawings and specifications except as otherwise stated.

Name and Signature of Contractor Representative

For City Use - Section II - Approval Action

Name:	Comments:
Date:	

City of Roanoke – Office of the City Engineer
Appendix C – Blank Form

REQUEST FOR INFORMATION

RFI No.

City Project Manager: **Date:**

Contractor:

Contractor Project Manager:

City of Roanoke Project Title:

Subject:

Spec Section: **Drawing No.**

Request:

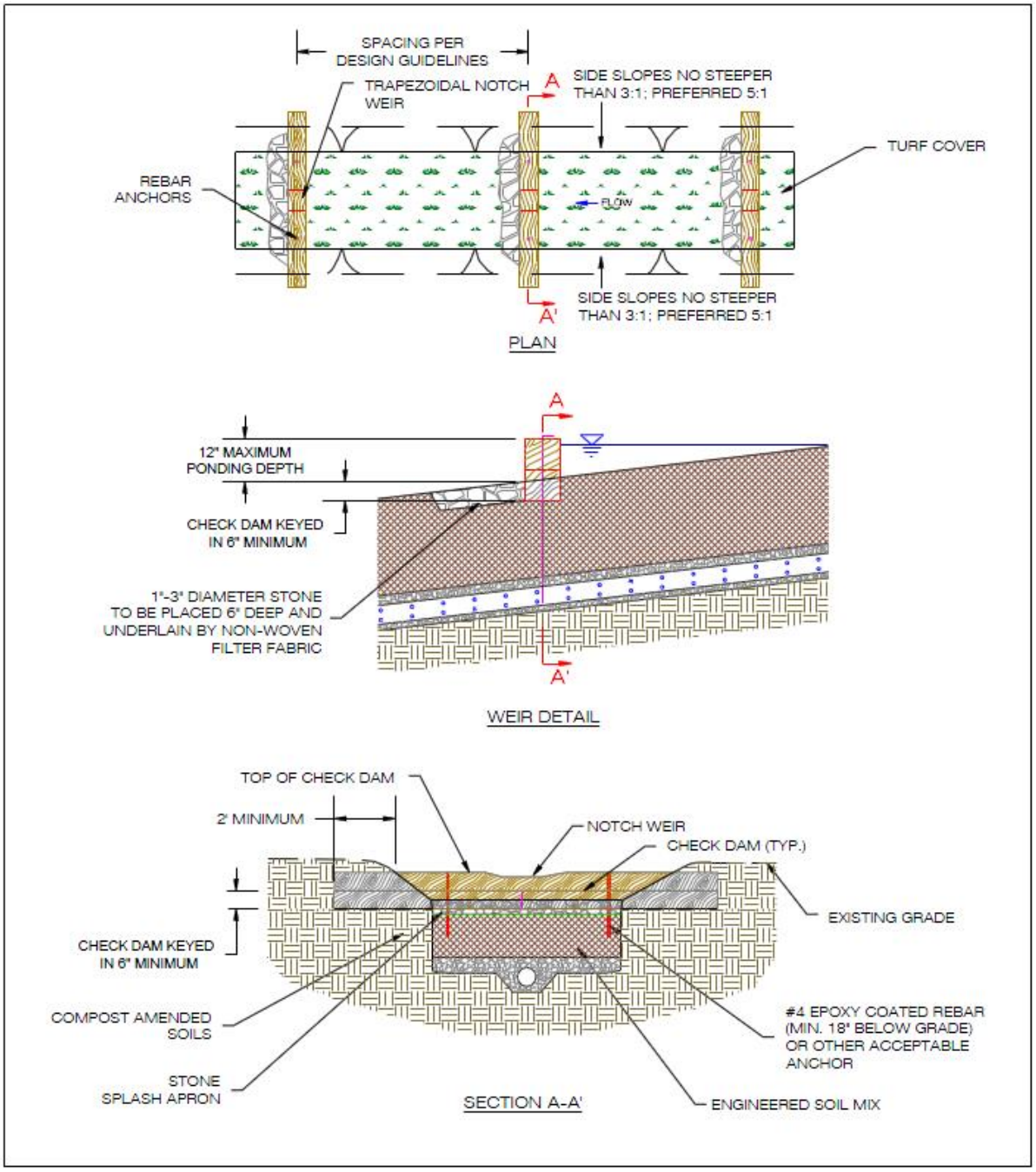

Figure 10.3. Typical Detail for Dry Swale Check Dam

YARD DRAIN AND RCP CONNECTION

NOTES:

1. - Connection and pipe to be backfilled per ASTM D2321.
2. - In lieu of an internal cylinder, an HDPE watertight repair coupler can be used to connect HDPE pipe to CMP.
3. - Internal cylinder adapter is not recommended for downstream connections.

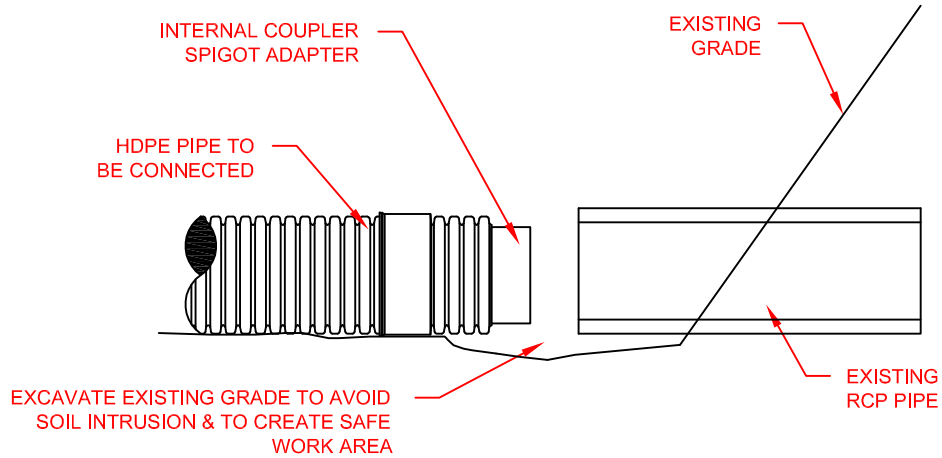

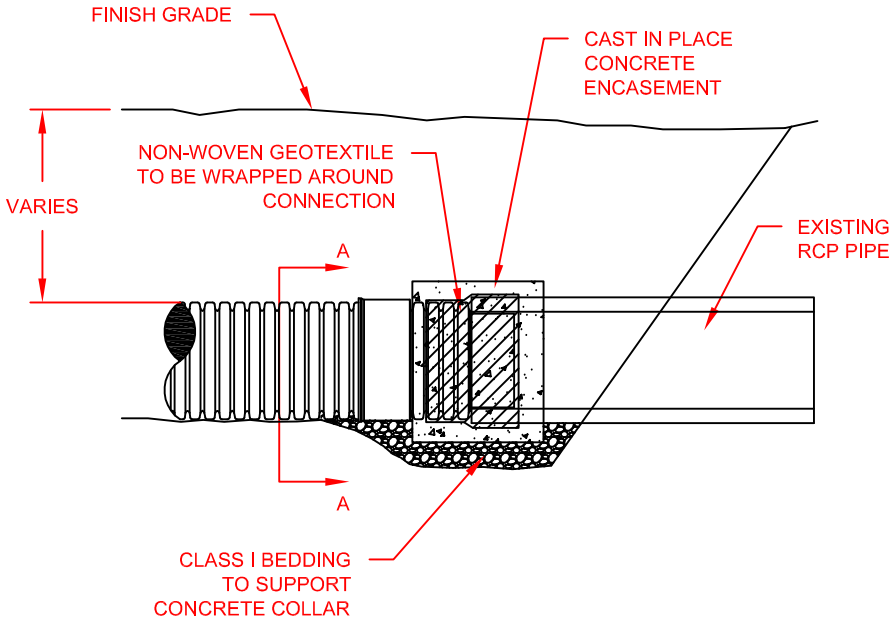

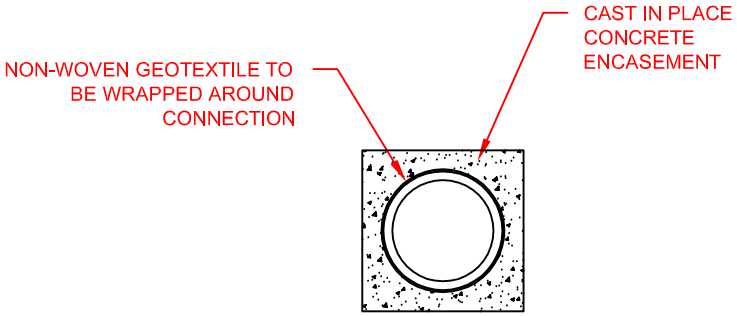

SECTION "A-A"

© 2007 ADS, INC.

REV.	DESCRIPTION	BY	MM/DD/YY	CHK'D
1	UPDATED DRAWING	TJR	01/24/07	CKS

ADVANCED DRAINAGE SYSTEMS, INC. ("ADS") HAS PREPARED THIS DETAIL BASED ON INFORMATION PROVIDED TO ADS. THIS DRAWING IS INTENDED TO DEPICT THE COMPONENTS AS REQUESTED. ADS HAS NOT PERFORMED ANY ENGINEERING OR DESIGN SERVICES FOR THIS PROJECT, NOR HAS ADS INDEPENDENTLY VERIFIED THE INFORMATION SUPPLIED. THE INSTALLATION DETAILS PROVIDED HEREIN ARE GENERAL RECOMMENDATIONS AND ARE NOT SPECIFIC FOR THIS PROJECT. THE DESIGN ENGINEER SHALL REVIEW THESE DETAILS PRIOR TO CONSTRUCTION. IT IS THE DESIGN ENGINEERS RESPONSIBILITY TO ENSURE THE DETAILS PROVIDED HEREIN MEETS OR EXCEEDS THE APPLICABLE NATIONAL, STATE, OR LOCAL REQUIREMENTS AND TO ENSURE THAT THE DETAILS PROVIDED HEREIN ARE ACCEPTABLE FOR THIS PROJECT.

DISSIMILAR PIPE CONNECTIONS FOR RCP DETAIL

DRAWING NUMBER: STD–603

ADS
ADVANCED DRAINAGE SYSTEMS, INC.
4640 TRUEMAN BLVD
HILLIARD, OHIO 43026

DRAWN BY: K.J.M.
DATE:
CK'D BY:
SCALE: NTS
SHEET 1 OF 1